Maricopa County
Air Quality Department

Planning & Analysis Division
1001 North Central Avenue
Suite #125
Phoenix, Arizona 85004
(602) 506-0169 – phone
(602) 506-6179 – fax

March 26, 2014

Dear Subscriber:

Enclosed are revisions to Maricopa County Air Pollution Control Regulations that were adopted by the Maricopa County Board of Supervisors on **March 26, 2014**.

To update your set of regulations, please follow the instructions below.

Remove and Replace:

Cover Page & Preface	(no page #)
Table of Contents	(pages i-iv)
Rule 321	Municipal Solid Waste Landfills
Rule 360	New Source Performance Standards
Rule 370	Federal Hazardous Air Pollutant Program
Rule 371	Acid Rain
Appendix G	Incorporated Materials

If you have any questions on the enclosed material, please call (602) 506-6010.

Sincerely,

Deborrah "Corky" Martinkovic
Planning & Analysis Division Manager

CM/mdm

MARICOPA COUNTY
AIR POLLUTION CONTROL
REGULATIONS

March 2014

MARICOPA COUNTY
AIR QUALITY DEPARTMENT
PLANNING & ANALYSIS DIVISION
1001 North Central Ave., Suite 125
Phoenix, Arizona 85004
(602) 506-6010

Maricopa County
Air Quality Department
Air Pollution Control Regulations

PREFACE

STATUTORY BASIS

These regulations constitute the legal basis for control of air pollution sources in Maricopa County, Arizona. They are adopted to implement the policy set forth in Title 49 of the Arizona Revised Statutes and to fulfill the State's responsibilities under the Federal Clean Air Act and its amendments to provide a legally enforceable State Implementation Plan for the attainment and maintenance of the National Ambient Air Quality Standards. **This printing of the regulations incorporates changes adopted by the Maricopa County Board of Supervisors through March 2014.** The revision date and/or adoption date is noted in the Table of Contents and on the first page of text of each rule.

ORGANIZATIONAL STRUCTURE AND NUMBERING OF RULES

In order to facilitate the use of the regulations, rules are organized into five sections that are consistent throughout the regulations. A numbering series designates the same section in each rule as follows:

SECTION 100 – GENERAL
SECTION 200 – DEFINITIONS
SECTION 300 – STANDARDS
SECTION 400 – ADMINISTRATIVE REQUIREMENTS
SECTION 500 – MONITORING AND RECORDS

The contents of each section are presented in an index that precedes each rule. Not all of the five sections are applicable to every rule, so only the relevant sections will be found in some rules. When a category does not pertain to a rule, the section and number series will appear in the index followed by the words "not applicable."

REGULATORY REFORM

The Maricopa County Air Quality Department has an ongoing program of regulatory review to evaluate the regulations for need, effectiveness, enforceability, clarity, simplicity and consistency with other statutory provisions. Users of these regulations are encouraged to submit any comments or suggestions to:

Maricopa County Air Quality Department
Planning & Analysis Division
1001 North Central Ave., Suite 125
Phoenix, Arizona 85004

TABLE OF CONTENTS
March 2014

RULE		DATE ADOPTED OR AMENDED
	REGULATION I **GENERAL PROVISIONS**	
100	GENERAL PROVISIONS AND DEFINITIONS	09/25/13
110	VIOLATIONS	02/15/95
120	CONDITIONAL ORDERS	11/15/93
130	EMERGENCY PROVISIONS	07/26/00
140	EXCESS EMISSIONS	09/05/01
	REGULATION II **PERMITS AND FEES**	
200	PERMIT REQUIREMENTS	03/26/08
201	EMISSIONS CAPS	07/26/00
204	EMISSION REDUCTION CREDITS FOR USE WITH THE ARIZONA EMISSIONS BANK	05/07/03
210	TITLE V PERMIT PROVISIONS	06/06/07
220	NON-TITLE V PERMIT PROVISIONS	06/06/07
230	GENERAL PERMITS	06/06/07
240	PERMIT REQUIREMENTS FOR NEW MAJOR SOURCES AND MAJOR MODIFICATIONS TO EXISTING MAJOR SOURCES	06/06/07
241	PERMITS FOR NEW SOURCES AND MODIFICATIONS TO EXISTING SOURCES	06/19/96
242	EMISSION OFFSETS GENERATED BY THE VOLUNTARY PAVING OF UNPAVED ROADS	06/20/07
245	CONTINUOUS SOURCE EMISSION MONITORING	11/15/93
270	PERFORMANCE TESTS	11/15/93
280	FEES	05/26/10
	REGULATION III **CONTROL OF AIR CONTAMINANTS**	
300	VISIBLE EMISSIONS	03/12/08
310	FUGITIVE DUST FROM DUST-GENERATING OPERATIONS	01/27/10
310.01	FUGITIVE DUST FROM NON-TRADITIONAL SOURCES OF FUGITIVE DUST	01/27/10

TABLE OF CONTENTS (cont.)
March 2014

RULE		DATE ADOPTED OR AMENDED
311	PARTICULATE MATTER FROM PROCESS INDUSTRIES	07/02/03
312	ABRASIVE BLASTING	07/02/03
313	INCINERATORS, BURN-OFF OVENS, AND CREMATORIES	05/09/12
314	OPEN OUTDOOR FIRES AND INDOOR FIREPLACES AT COMMERCIAL AND INSTITUTIONAL ESTABLISHMENTS	07/25/12
315	SPRAY COATING OPERATIONS	11/17/99
316	NONMETALLIC MINERAL PROCESSING	03/12/08
317	HOSPITAL/MEDICAL/INFECTIOUS WASTE INCINERATORS	07/07/10
318	APPROVAL OF RESIDENTIAL WOODBURNING DEVICES	04/21/99
319	GINNING OPERATIONS	11/19/03
320	ODORS AND GASEOUS AIR CONTAMINANTS	07/02/03
321	MUNICIPAL SOLID WASTE LANDFILLS	03/26/14
322	POWER PLANT OPERATIONS	10/17/07
323	FUEL BURNING EQUIPMENT FROM INDUSTRIAL / COMMERCIAL / INSTITUTIONAL (ICI) SOURCES	10/17/07
324	STATIONARY INTERNAL COMBUSTION (IC) ENGINES	10/17/07
325	BRICK AND STRUCTURAL CLAY PRODUCTS (BSCP) MANUFACTURING	08/10/05
330	VOLATILE ORGANIC COMPOUNDS	09/25/13
331	SOLVENT CLEANING	09/25/13
332	[RESCINDED]	11/20/96
333	PETROLEUM SOLVENT DRY CLEANING	09/25/13
334	RUBBER SPORTS BALL MANUFACTURING	09/25/13
335	ARCHITECTURAL COATINGS	09/25/13
336	SURFACE COATING OPERATIONS	09/25/13
337	GRAPHIC ARTS	08/17/11
338	SEMICONDUCTOR MANUFACTURING	09/25/13
339	VEGETABLE OIL EXTRACTION PROCESSES	09/25/13
340	CUTBACK AND EMULSIFIED ASPHALT	09/25/13
341	METAL INVESTMENT CASTING	09/25/13
342	COATING WOOD FURNITURE AND FIXTURES	09/25/13
343	COMMERCIAL BREAD BAKERIES	09/25/13

TABLE OF CONTENTS (cont.)
March 2014

RULE		DATE ADOPTED OR AMENDED
344	AUTOMOTIVE WINDSHIELD WASHER FLUID	09/25/13
345	VEHICLE AND MOBILE EQUIPMENT COATING	09/25/13
346	COATING WOOD MILLWORK	09/25/13
347	FERROUS SAND CASTING	09/25/13
348	AEROSPACE MANUFACTURING AND REWORK OPERATIONS	09/25/13
349	PHARMACEUTICAL, COSMETIC AND VITAMIN MANUFACTURING OPERATIONS	09/25/13
350	STORAGE OF ORGANIC LIQUIDS AT BULK PLANTS AND TERMINALS	04/06/92
351	LOADING OF ORGANIC LIQUIDS	02/15/95
352	GASOLINE DELIVERY VESSEL TESTING AND USE	09/25/13
353	GASOLINE IN STATIONARY DISPENSING TANKS	09/25/13
358	POLYSTYRENE FOAM OPERATIONS	09/25/13
360	NEW SOURCE PERFORMANCE STANDARDS	03/26/14
370	FEDERAL HAZARDOUS AIR POLLUTANT PROGRAM	03/26/14
371	ACID RAIN	03/26/14
372	MARICOPA COUNTY HAZARDOUS AIR POLLUTANTS (HAPS) PROGRAM	06/06/07

REGULATION IV
THE HEARING BOARD

400	PROCEDURE BEFORE THE HEARING BOARD	11/15/93

REGULATION V
AIR QUALITY STANDARDS AND AREA CLASSIFICATION

500	ATTAINMENT AREA CLASSIFICATION	07/26/00
510	AIR QUALITY STANDARDS	11/01/06

REGULATION VI
EMERGENCY EPISODES

600	EMERGENCY EPISODES	07/13/88

TABLE OF CONTENTS (cont.)
March 2014

RULE		DATE ADOPTED OR AMENDED
	ORDINANCES	
P–21	VEHICLE IDLING RESTRICTION ORDINANCE	06/26/02
P–25	LEAF BLOWER RESTRICTION ORDINANCE	02/20/08
P–26	RESIDENTIAL WOODBURNING RESTRICTION ORDINANCE	03/26/08
P–27	VEHICLE PARKING AND USE ON UNSTABILIZED VACANT LOTS	01/12/11
P–28	OFF-ROAD VEHICLE USE IN UNINCORPORATED AREAS OF MARICOPA COUNTY	01/12/11
	APPENDICES	
APPENDIX A	FOSSIL FUEL-FIRED STEAM GENERATORS	07/13/88
APPENDIX B	STANDARD PERMIT APPLICATION FORM AND FILING INSTRUCTIONS	06/06/07
APPENDIX C	FUGITIVE DUST TEST METHODS	03/26/08
APPENDIX D	LIST OF INSIGNIFICANT ACTIVITIES	08/22/01
APPENDIX E	LIST OF TRIVIAL ACTIVITIES	08/22/01
APPENDIX F	SOIL DESIGNATIONS	04/07/04
APPENDIX G	INCORPORATED MATERIALS	03/26/14
APPENDIX H	PROCEDURES FOR DETERMINING AMBIENT AIR CONCENTRATIONS FOR HAZARDOUS AIR POLLUTANTS	06/06/07

REGULATION I – GENERAL PROVISIONS

RULE 100
GENERAL PROVISIONS AND DEFINITIONS

INDEX

SECTION 100 – GENERAL

101 DECLARATION OF INTENT
102 LEGAL AUTHORITY
103 VALIDITY
104 CIRCUMVENTION
105 RIGHT OF INSPECTION OF PREMISES
106 RIGHT OF INSPECTION OF RECORDS
107 ADVISORY COUNCIL
108 HEARING BOARD
109 ANTI-DEGRADATION
110 AVAILABILITY OF POLLUTION INFORMATION
111 ANNUAL REASONABLE FURTHER PROGRESS (RFP) REPORT
112 AVAILABILITY OF INFORMATION

SECTION 200 – DEFINITIONS

200.1 AAC
200.2 ACT
200.3 ACTUAL EMISSIONS
200.4 ADMINISTRATOR
200.5 ADVISORY COUNCIL
200.6 AFFECTED FACILITY
200.7 AFFECTED SOURCE
200.8 AFFECTED STATE
200.9 AIR CONTAMINANT
200.10 AIR POLLUTION
200.11 AIR POLLUTION CONTROL EQUIPMENT
200.12 ALLOWABLE EMISSIONS
200.13 AMBIENT AIR
200.14 AP-42

200.15 APPLICABLE IMPLEMENTATION PLAN

200.16 APPLICABLE REQUIREMENT

200.17 APPROVED

200.18 AREA SOURCE

200.19 A.R.S.

200.20 ASME

200.21 ASTM

200.22 ATTAINMENT AREA

200.23 BEGIN ACTUAL CONSTRUCTION

200.24 BEST AVAILABLE CONTROL TECHNOLOGY (BACT)

200.25 BRITISH THERMAL UNIT (BTU)

200.26 BUILDING, STRUCTURE, FACILITY, OR INSTALLATION

200.27 CFR

200.28 CIRCUMSTANCES OUTSIDE THE CONTROL OF THE SOURCE

200.29 CLEAN COAL TECHNOLOGY

200.30 CLEAN COAL TECHNOLOGY DEMONSTRATION PROJECT

200.31 COMMENCE

200.32 COMPLETE

200.33 CONSTRUCTION

200.34 CONTROL OFFICER

200.35 DEPARTMENT

200.36 DIRECTOR

200.37 DISCHARGE

200.38 DIVISION

200.39 DUST GENERATING OPERATION

200.40 EFFLUENT

200.41 ELECTRIC UTILITY STEAM GENERATING UNIT

200.42 EMISSION STANDARD

200.43 EMISSIONS UNIT

200.44 EPA

200.45 EQUIVALENT METHOD

200.46 EXCESS EMISSIONS

200.47 EXISTING SOURCE

200.48 FACILITY

200.59 FEDERAL APPLICABLE REQUIREMENT

200.50 FEDERAL LAND MANAGER

200.51 FEDERALLY ENFORCEABLE

200.52 FINAL PERMIT

200.53 FUEL OIL

200.54 FUGITIVE EMISSION

200.55 HAZARDOUS AIR POLLUTANT REASONABLY AVAILABLE CONTROL TECHNOLOGY (HAPRACT)

200.56 INDIAN GOVERNING BODY

200.57 INDIAN RESERVATION

200.58 INSIGNIFICANT ACTIVITY

200.59 MAJOR MODIFICATION

200.60 MAJOR SOURCE

200.61 MAJOR SOURCE THRESHOLD

200.62 MALFUNCTION

200.63 MATERIAL PERMIT CONDITION

200.64 METHOD OF OPERATION

200.65 MODIFICATION

200.66 NET EMISSIONS INCREASE

200.67 NEW SOURCE

200.68 NITROGEN OXIDES (NO_X)

200.69 NONATTAINMENT AREA

200.70 NON-PRECURSOR ORGANIC COMPOUND

200.71 OPEN OUTDOOR FIRE

200.72 OPERATION

200.73 ORGANIC COMPOUND

200.74 ORGANIC LIQUID

200.75 OWNER AND/OR OPERATOR

200.76 PARTICULATE MATTER

200.77 PERMITTING AUTHORITY

200.78 PERSON

200.79 PHYSICAL CHANGE

200.80 PM2.5

200.81 PM10

200.82 POLLUTANT

200.83 POLLUTION CONTROL PROJECT

200.84 PORTABLE SOURCE

200.85 POTENTIAL TO EMIT

200.86 PROPOSED PERMIT

200.87 PROPOSED FINAL PERMIT

200.88 QUANTIFIABLE

200.89 REACTIVATION OF A VERY CLEAN COAL-FIRED ELECTRIC UTILITY STEAM GENERATING UNIT

200.90 REASONABLY AVAILABLE CONTROL TECHNOLOGY (RACT)

200.91 REFERENCE METHOD

200.92 REGULATED AIR POLLUTANT

200.93 REGULATORY REQUIREMENTS

200.94 REPLICABLE

200.95 REPOWERING

200.96 REPRESENTATIVE ACTUAL ANNUAL EMISSIONS

200.97 RESPONSIBLE OFFICIAL

200.98 SCHEDULED MAINTENANCE

200.99 SIGNIFICANT

200.100 SOLVENT-BORNE COATING MATERIAL

200.101 SOURCE

200.102 SPECIAL INSPECTION WARRANT

200.103 STANDARD CONDITIONS

200.104 STATE IMPLEMENTATION PLAN (SIP)

200.105 STATIONARY SOURCE

200.106 SYNTHETIC MINOR

200.107 TEMPORARY CLEAN COAL TECHNOLOGY DEMONSTRATION PROJECT

200.108 TITLE V

200.109 TOTAL REDUCED SULFUR (TRS)

200.110 TRADE SECRETS

200.111 TRIVIAL ACTIVITY

200.112 UNCLASSIFIED AREA

200.113 VOLATILE ORGANIC COMPOUND (VOC)

SECTION 300 – STANDARDS

301 AIR POLLUTION PROHIBITED

302 APPLICABILITY OF MULTIPLE RULES

SECTION 400 – ADMINISTRATIVE REQUIREMENTS

401 CERTIFICATION OF TRUTH, ACCURACY, AND COMPLETENESS

402 CONFIDENTIALITY OF INFORMATION

SECTION 500 – MONITORING AND RECORDS

501 REPORTING REQUIREMENTS

502 DATA REPORTING

503 EMISSION STATEMENTS REQUIRED AS STATED IN THE ACT

504 RETENTION OF RECORDS

505 ANNUAL EMISSIONS INVENTORY REPORT

Revised 07/13/88
Revised 10/01/90
Revised 06/22/92
Revised 11/16/92
Repealed and Adopted 11/15/93
Revised 02/15/95
Revised 04/03/96
Revised 06/19/96
Revised 03/04/98
Revised 05/20/98
Revised 07/26/00
Revised 03/07/01
Revised 08/22/01
Revised 11/06/02
Revised 03/15/06
Revised 06/06/07
Revised 09/25/13

MARICOPA COUNTY
AIR POLLUTION CONTROL REGULATIONS
REGULATION I – GENERAL PROVISIONS

RULE 100
GENERAL PROVISIONS AND DEFINITIONS

SECTION 100 – GENERAL

101 **DECLARATION OF INTENT:** The Maricopa County Air Pollution Control Regulations prevent, reduce, control, correct, or remove regulated air pollutants originating within the territorial limits of Maricopa County and carry out the mandates of Arizona Revised Statutes (A.R.S.), Title 49-The Environment.

102 **LEGAL AUTHORITY:** These rules are adopted under the authority granted by A.R.S. §49-479.

103 **VALIDITY:** If any section, subsection, clause, phrase, or provision of these rules is held to be invalid for any reason, such decision shall not affect the validity of the remaining portion.

104 **CIRCUMVENTION:** A person shall not build, erect, install, or use any article, machine, equipment, condition, or any contrivance, the use of which, without resulting in a reduction in the total release of regulated air pollutants to the atmosphere, conceals or dilutes an emission which would otherwise constitute a violation of these rules. No person shall circumvent these rules to dilute regulated air pollutants by using more emission openings than is considered normal practice by the industry or activity in question.

105 **RIGHT OF INSPECTION OF PREMISES:** The Control Officer, during reasonable hours, for the purpose of enforcing and administering these rules or any provision of A.R.S. relating to the emission or control prescribed pursuant thereto, may enter every building, premises, or other place, except the interior of structures used as private residences. In the event that consent to enter for inspection purposes has been refused or circumstances justify the failure to seek such consent, special inspection warrants may be issued by a magistrate. Every person is guilty of a petty offense under A.R.S. §49-488 who in any way denies, obstructs, or hampers such entrance or inspection that is lawfully authorized by warrant.

106 **RIGHT OF INSPECTION OF RECORDS:** When the Control Officer has reasonable cause to believe that any person has violated or is in violation of any provision of this rule, any rule adopted under this rule, or any requirement of a permit issued under this rule, the Control Officer may request, in writing, that such person produce all existing books, records, and other documents evidencing tests, inspections, or studies which may reasonably relate to compliance or non-compliance with rules adopted under this rule. No person shall fail nor refuse to produce all existing documents required in such written request by the Control Officer.

107 **ADVISORY COUNCIL:** An Advisory Council appointed by the Board of Supervisors may advise and consult with the Board of Supervisors, the Maricopa County Air Quality Department, and the Control Officer in effecting the mandates of A.R.S. Title 49.

108 **HEARING BOARD:** The Board of Supervisors shall appoint a 5-member hearing board knowledgeable in the field of air pollution. At least three members shall not have a substantial interest, as defined in A.R.S. §38-502(11), in any person required to obtain an air pollution permit or subject to enforcement orders issued under these rules. Each member shall serve a term of three years.

109 **ANTI-DEGRADATION:** The standards in these rules shall not be construed as permitting the preventable degradation of air quality in any area of Maricopa County.

110 **AVAILABILITY OF POLLUTION INFORMATION:** The public shall be informed on a daily basis of average daily concentration of three pollutants; particulates, carbon monoxide, and ozone. This information shall be disseminated through the use of newspapers, radio, and television. The levels of each pollutant shall be expressed through the use of the Air Quality Index (AQI) and a written copy of such information shall be made available at the office of the Maricopa County Air Quality Department, 1001 N. Central Ave., Phoenix, Arizona, 85004.

111 **ANNUAL REASONABLE FURTHER PROGRESS (RFP) REPORT:** A report on the progress in implementation of nonattainment area plans shall be produced by the Department each year. The primary function of the report is to review the implementation schedules for control measures and emission reduction forecasts in the nonattainment area plans. The annual report will be made available

to the public at the offices of the Maricopa County Air Quality Department, 1001 N. Central Ave., Phoenix, Arizona, 85004.

112 **AVAILABILITY OF INFORMATION:** Copies of these incorporated materials are available electronically at: ecfr.gpoaccess.gov; at the Maricopa County Air Quality Department, 1001 N. Central Ave., Phoenix, AZ, 85004. ASTM standards are available from ASTM International, 100 Barr Harbor Drive, P.O. Box C700, West Conshohocken, PA 19428, or from its website at www.astm.org.

SECTION 200 – DEFINITIONS: To aid in the understanding of these rules, the following general definitions are provided. Additional definitions, as necessary, can be found in each rule of the Maricopa County Air Pollution Control Regulations.

200.1 **AAC**: Arizona Administrative Code.

200.2 **ACT**: The Clean Air Act of 1963 (P.L. 88-206; 42 United States Code sections 7401 through 7671), as amended by the Clean Air Act Amendments of 1990 (P.L.101-549).

200.3 **ACTUAL EMISSIONS**: The actual rate of emissions of a pollutant from an emissions unit, as determined in Section 200.3(a) through Section 200.3(e) of this rule:

a. In general, actual emissions as of a particular date shall equal the average rate, in tons per year, at which the emissions unit actually emitted the pollutant during a 2-year period that precedes the particular date and that is representative of normal source operation. The Control Officer may allow the use of a different time period upon a demonstration that it is more representative of normal source operation. Actual emissions shall be calculated using the emissions unit's actual operating hours, production rates, and types of materials processed, stored, or combusted during the selected time period.

b. If there is inadequate information to determine actual historical emissions, then the Control Officer may presume that source-specific allowable emissions for the emissions unit are equivalent to the actual emissions of the emissions unit.

c. For any emissions unit at a Title V source, other than an electric utility steam generating unit described in Section 200.3(e) of this rule that has not begun normal operations on the particular date, actual emissions shall equal the unit's potential to emit on that date.

d. For any emissions unit at a Non-Title V source that has not begun normal operations on the particular date, actual emissions shall be based on applicable control equipment requirements and projected conditions of operation.

e. For an electric utility steam generating unit (other than a new unit or the replacement of an existing unit), actual emissions of the unit, following the physical or operational change, shall equal the representative actual annual emissions of the unit, if the source owner and/or operator maintains and submits to the Control Officer on an annual basis, for a period of five years from the date the unit resumes regular operation, information demonstrating that the

physical or operational change did not result in an emissions increase. A longer period, not to exceed 10 years may be required by the Control Officer, if the Control Officer determines the longer period to be more representative of normal source post-change operations.

200.4 **ADMINISTRATOR**: The Administrator of the United States Environmental Protection Agency.

200.5 **ADVISORY COUNCIL:** The Maricopa County Air Pollution Control Advisory Council appointed by the Maricopa County Board of Supervisors.

200.6 **AFFECTED FACILITY:** With reference to a stationary source, any apparatus to which a standard is applicable.

200.7 **AFFECTED SOURCE:** A source that includes one or more emissions units which are subject to emission reduction requirements or limitations under Title IV-Acid Deposition Control of the Act.

200.8 **AFFECTED STATE:** Any State whose air quality may be affected and that is contiguous to Arizona or that is within 50 miles of the permitted source.

200.9 **AIR CONTAMINANT:** Includes smoke, vapors, charred paper, dust, soot, grime, carbon, fumes, gases, sulfuric acid mist aerosols, aerosol droplets, odors, particulate matter, windborne matter, radioactive materials, noxious chemicals, or any other material in the outdoor atmosphere.

200.10 **AIR POLLUTION:** The presence in the outdoor atmosphere of one or more air contaminants, or combinations thereof, in sufficient quantities, which either alone or in connection with other substances, by reason of their concentration and duration, are or tend to be injurious to human, plant, or animal life, or causes damage to property, or unreasonably interferes with the comfortable enjoyment of life or property of a substantial part of a community, or obscures visibility, or which in any way degrades the quality of the ambient air below the standards established by the Board of Supervisors.

200.11 **AIR POLLUTION CONTROL EQUIPMENT:** Equipment used to eliminate, reduce, or control the emission of air pollutants into the ambient air.

200.12 **ALLOWABLE EMISSIONS:** The emission rate of a stationary source calculated using the maximum rated capacity of the source (unless the source is subject to federally enforceable limits which restrict the operating rate or hours of operation or both) and the most stringent of the following:

a. The applicable New Source Performance Standards as described in Rule 360 of these rules or the Federal Hazardous Air Pollutant Program as described in Rule 370 of these rules; or

b. The applicable existing source performance standard as approved for the State Implementation Plan (SIP); or

c. The emissions rate specified in any federally promulgated rule or federally enforceable permit condition.

200.13 **AMBIENT AIR:** That portion of the atmosphere, external to buildings, to which the general public has access.

200.14 **AP-42:** The EPA document "Compilation of Air Pollutant Emission Factors," as incorporated by reference in Appendix G of these rules.

200.15 **APPLICABLE IMPLEMENTATION PLAN:** Those provisions of the State Implementation Plan (SIP) approved by the Administrator or a Federal Implementation Plan (FIP) promulgated under Title I-Air Pollution Prevention and Control of the Act.

200.16 **APPLICABLE REQUIREMENT:** Applicable requirement means any of the following:

a. Any federal applicable requirement as defined in Section 200.49 of this rule.

b. Any other requirement established under the Maricopa County Air Pollution Control Regulations or A.R.S. Title 49, Chapter 3, Articles 1, 3, 7, and 8.

200.17 **APPROVED:** Approved in writing by the Maricopa County Air Pollution Control Officer.

200.18 **AREA SOURCE:** Any stationary source that is not a major source. For purposes of these rules, the term "area source" shall not include motor vehicles or nonroad vehicles subject to regulation under Title II-Emission Standards for Moving Sources of the Act.

200.19 **A.R.S.:** The Arizona Revised Statutes. The titles of the most frequently used A.R.S. references in these rules are listed below:

A.R.S. §38-502(11)	Public Officers and Employees, Conduct of Office, Conflict of Interest of Officers and Employees, Definitions, Substantial Interest
A.R.S. Title 49	The Environment
A.R.S. Title 49, Chapter 3	The Environment, Air Quality
A.R.S. Title 49, Chapter 4	The Environment, Solid Waste Management
A.R.S. §49-109	The Environment, General Provisions, Department of Environmental Quality, Certificate of Disclosure of Violations; Definition; Remedies
A.R.S. §49-401	The Environment, Air Quality, General Provisions, Declaration of Policy
A.R.S. §49-426	The Environment, Air Quality, State Air Pollution Control, Permits; Duties of Director; Exceptions; Applications; Objections; Fees
A.R.S. §49-426.04	The Environment, Air Quality, State Air Pollution Control, State List of Hazardous Air Pollutants

A.R.S. §49-426.05	The Environment, Air Quality, State Air Pollution Control, Designation of Sources of Hazardous Air Pollutants
A.R.S. §49-429	The Environment, Air Quality, State Air Pollution Control, Permit Transfers; Notice; Appeal
A.R.S. §49-464	The Environment, Air Quality, State Air Pollution Control, Violation; Classification; Penalties; Definition
A.R.S. §49-473	The Environment, Air Quality, County Air Pollution Control, Board of Supervisors
A.R.S. §49-476.01	The Environment, Air Quality, County Air Pollution Control, Monitoring
A.R.S. §49-478	The Environment, Air Quality, County Air Pollution Control, Hearing Board
A.R.S. §49-480	The Environment, Air Quality, County Air Pollution Control, Permits; Fees
A.R.S. §49-480.03	The Environment, Air Quality, County Air Pollution Control, Federal Hazardous Air Pollutant Program; Date Specified by Administrator; Prohibition
A.R.S. §49-480.04	The Environment, Air Quality, County Air Pollution Control, County Program for Control of Hazardous Air Pollutants
A.R.S. §49-482	The Environment, Air Quality, County Air Pollution Control, Appeals to Hearing Board
A.R.S. §49-483	The Environment, Air Quality, County Air Pollution Control, Permit Transfers; Notice; Appeal
A.R.S. §49-487	The Environment, Air Quality, County Air Pollution Control, Classification and Reporting; Confidentiality of Records
A.R.S. §49-488	The Environment, Air Quality, County Air Pollution Control, Special Inspection Warrant
A.R.S. §49-490	The Environment, Air Quality, County Air Pollution Control, Hearings on Orders of Abatement
A.R.S. §49-498	The Environment, Air Quality, County Air Pollution Control, Notice of Hearing; Publication; Service
A.R.S. §49-501	The Environment, Air Quality, County Air Pollution Control, Unlawful Open Burning; Definition; Exceptions; Fine
A.R.S. §49-511	The Environment, Air Quality, County Air Pollution Control, Violations, Order of Abatement
A.R.S. §49-514	The Environment, Air Quality, County Air Pollution Control, Violation; Classification; Definition

200.20 **ASME:** The American Society of Mechanical Engineers.

200.21 **ASTM:** The American Society for Testing and Materials.

200.22 **ATTAINMENT AREA:** An area so designated by the Administrator, acting under Section 107-Air Quality Control Regions of the Act, as having ambient air pollutant concentrations equal to or less than national primary or secondary ambient air quality standards for a particular pollutant or pollutants.

200.23 **BEGIN ACTUAL CONSTRUCTION:** In general, initiation of physical on-site construction activities on an emissions unit, which are of a permanent nature. Such activities include installation of building supports and foundations, laying of underground pipe work, and construction of permanent storage structures. With respect to a change in method of operation, "begin actual construction" refers to those on-site activities, other than preparatory activities, which mark the initiation of the change.

200.24 **BEST AVAILABLE CONTROL TECHNOLOGY (BACT):** An emissions limitation, based on the maximum degree of reduction for each pollutant, subject to regulation under the Act, which would be emitted from any proposed stationary source or modification, which the Control Officer, on a case-by-case basis, taking into account energy, environmental, and economic impacts and other costs, determines is achievable for such source or modification through application of production processes or available methods, systems, and techniques, including fuel cleaning or treatment or innovative fuel combination techniques for control of such pollutant. Under no circumstances shall BACT be determined to be less stringent than the emission control required by an applicable provision of these rules or of any State or Federal laws ("Federal laws" include the EPA approved State Implementation Plan (SIP)). If the Control Officer determines that technological or economic limitations on the application of measurement methodology to a particular emissions unit would make the imposition of an emissions standard infeasible, a design, equipment, work practice, operational standard, or combination thereof may be prescribed instead to satisfy the requirement for the application of BACT. Such standard shall, to the degree possible, set forth the emissions reduction achievable by implementation of such design, equipment, work practice or operation, and shall provide for compliance by means which achieve equivalent results.

200.25 **BRITISH THERMAL UNIT (BTU):** The quantity of heat required to raise the temperature of one pound of water one degree Fahrenheit (°F) at 39.1°F.

200.26 **BUILDING, STRUCTURE, FACILITY, OR INSTALLATION:** All the pollutant emitting equipment and activities that belong to the same industrial grouping, that are located on one or more contiguous or adjacent properties, and that are under the control of the same person or persons under common control, except the activities of any vessel. Pollutant-emitting activities shall be considered as part of the same industrial grouping if they belong to the same "Major Group" as described in the "Standard Industrial Classification Manual, 1987".

200.27 **CFR:** The United States Code of Federal Regulations.

200.28 **CIRCUMSTANCES OUTSIDE THE CONTROL OF THE SOURCE:** Shall include, but not be limited to, circumstances where a violation resulted from a sudden and unavoidable breakdown of the process or the control equipment, resulted from unavoidable conditions during a startup or shutdown, or resulted from upset of operations.

200.29 **CLEAN COAL TECHNOLOGY:** Any technology, including technologies applied at the pre-combustion, combustion, or post-combustion stage, at a new or existing facility that will achieve significant reductions in air emissions of sulfur dioxide or oxides of nitrogen associated with the utilization of coal in the generation of electricity or process steam that was not in widespread use as of November 15, 1990.

200.30 **CLEAN COAL TECHNOLOGY DEMONSTRATION PROJECT:** A project using funds appropriated under the heading "Department Of Energy-Clean Coal Technology", up to a total amount of $2,500,000,000 for commercial demonstration of clean coal technology or similar projects, funded through appropriations for the Environmental Protection Agency. The Federal contribution for a qualifying project shall be at least 20% of the total cost of the demonstration project.

200.31 **COMMENCE:** As applied to construction of a major source or a major modification, that the owner and/or operator has all necessary preconstruction approvals or permits and has either:

a. Begun, or caused to begin, a continuous program of actual on-site construction of the source, to be completed within a reasonable time; or

b. Entered into binding agreements or contractual obligations, which cannot be canceled or modified without substantial loss to the owner and/or operator, to undertake a program of actual construction of the source to be completed within a reasonable time.

200.32 **COMPLETE:** In reference to an application for a permit, "complete" means that the application contains all the information necessary for processing the application. Designating an application complete for purposes of permit processing does not preclude the Control Officer from requesting nor from accepting any additional information.

200.33 **CONSTRUCTION:** Any physical change or change in the method of operation, including fabrication, erection, or installation, demolition, or modification of an emissions unit, which would result in a change in actual emissions.

200.34 **CONTROL OFFICER:** The executive head of the department authorized or designated to enforce air pollution regulations, the executive head of an air pollution control district established under A.R.S. §49-473, or the designated agent.

200.35 **DEPARTMENT:** The Maricopa County Air Quality Department.

200.36 **DIRECTOR:** The director of the Arizona Department Of Environmental Quality (ADEQ).

200.37 **DISCHARGE:** The release or escape of an effluent into the atmosphere from a source.

200.38 **DIVISION:** The Division no longer exists; consequently, all references in these rules to Division refer to Department.

200.39 **DUST GENERATING OPERATION:** Any activity capable of generating fugitive dust, including but not limited to, land clearing, earthmoving, weed abatement by discing or blading, excavating, construction, demolition, bulk material handling, storage and/or transporting operations, vehicle use and movement, the operation of any outdoor equipment, or unpaved parking lots. For the purpose of this rule, landscape maintenance and playing on or maintaining a field used for nonmotorized sports shall not be considered a dust generating operation. However, landscape maintenance shall not include grading, trenching, or any other mechanized surface disturbing activities performed to establish initial landscapes or to redesign existing landscapes.

200.40 **EFFLUENT:** Any air contaminant which is emitted and subsequently escapes into the atmosphere.

200.41 **ELECTRIC UTILITY STEAM GENERATING UNIT:** Any steam electric generating unit that is constructed for the purpose of supplying more than 1/3 of its potential electric output capacity and more than 25 MW electric output to any utility power distribution system for sale. Any steam supplied to a steam distribution system, for the purpose of providing steam to a steam-electric generator that would produce electrical energy for sale, is also considered in determining the electrical energy output capacity of the affected facility.

200.42 **EMISSION STANDARD:** The definition of emission standard, as summarized from A.R.S. §49-514(T) and A.R.S. §49-464(V), is: A numeric limitation on the volume or concentration of air pollutants in emissions from a source or a specific design, equipment, or work practice standard, the purpose of which is to eliminate or reduce the volume or concentration of pollutants emitted by a source. The term emission standard does not include opacity standards. Violations of emission standards shall be determined in the manner prescribed by the applicable regulations issued by the Administrator or the Director or the Control Officer.

200.43 **EMISSIONS UNIT:** Any part of a stationary source which emits or would have the potential to emit any regulated air pollutant.

200.44 **EPA:** The United States Environmental Protection Agency.

200.45 **EQUIVALENT METHOD:** Any method of sampling and analyzing for an air pollutant, which has been demonstrated to the Administrator's satisfaction to have a consistent and quantitatively known relationship to the reference method, under specified conditions.

200.46 **EXCESS EMISSIONS:** Emissions of an air pollutant in excess of an emission standard, as measured by the compliance test method applicable to such emission standard.

200.47 EXISTING SOURCE:

a. A source in operation prior to the effective date of this rule, or a source on which the construction or modification has commenced and for which the Control Officer has granted a permit prior to the effective date of this rule; or

b. When used in conjunction with a source subject to new source performance standards (NSPS), any source which does not have an applicable NSPS under Rule 360-New Source Performance Standards of these rules.

200.48 FACILITY: The definition of facility is included in Section 200.6-Definition of Affected Facility of this rule and in Section 200.26-Definition of Building, Structure, Facility or Installation of this rule.

200.49 FEDERAL APPLICABLE REQUIREMENT: Any of the following as they apply to emissions units covered by a Title V permit or a Non-Title V permit (including requirements that have been promulgated or approved by the EPA through rulemaking at the time of issuance but have future effective compliance dates):

a. Any standard or other requirement provided for in the applicable implementation plan approved or promulgated by the EPA through rulemaking under Title I-Air Pollution Prevention And Control of the Act that implements the relevant requirements of the Act, including any revisions to that plan promulgated in 40 CFR 52.

b. Any term or condition of any unitary permits issued under regulations approved or promulgated through rulemaking under Title I-Air Pollution Prevention and Control, including Parts C or D, of the Act.

c. Any standard or other requirement under Section 111-Standards of Performance for New Stationary Sources of the Act, includes Section 111(d).

d. Any standard or other requirement under Section 112-National Emission Standards for Hazardous Air Pollutants of the Act, including any requirement concerning accident prevention under Section 112(r)(7) of the Act.

e. Any standard or other requirement of the acid rain program under Title IV Acid Deposition Control of the Act or the regulations promulgated thereunder and incorporated under Rule 371-Acid Rain of these rules.

f. Any requirements established under Section 504(b)-Permit Requirements and Conditions or Section 114(a)(3)-Inspections, Monitoring, and Entry of the Act.

g. Any standard or other requirement governing solid waste incineration under Section 129-Solid Waste Combustion of the Act.

h. Any standard or other requirement for consumer and commercial products pursuant to Section 183(e)-Federal Ozone Measures of the Act.

i. Any standard or other requirement for tank vessels pursuant to Section 183(f)-Federal Ozone Measures of the Act.

j. Any standard or other requirement of the program to control air pollution from outer continental shelf sources under Section 328-Air Pollution from Outer Continental Shelf Activities of the Act.

k. Any standard or other requirement of the regulations promulgated to protect stratospheric ozone under Title VI-Stratospheric Ozone Protection of the Act, unless the Administrator has determined that such requirements need not be contained in a Title V permit; and

l. Any national ambient air quality standard or increment or visibility requirement under Part C-Prevention of Significant Deterioration of Air Quality of Title I-Air Pollution Prevention and Control of the Act, but only as it would apply to temporary sources permitted under Section 504(e)-Permit Requirements and Conditions of the Act.

200.50 **FEDERAL LAND MANAGER:** With respect to any lands in the United States, the Secretary of the Department with authority over such lands.

200.51 **FEDERALLY ENFORCEABLE:**

a. All terms and conditions contained in a Title V permit, except those terms and conditions which have been specifically designated as not federally enforceable;

b. The requirements of operating permit programs and permits issued under such permit programs which have been approved by the Administrator, including the requirements of State and County operating permit programs approved under Title V-Permits of the Act or under any new source review permit program;

c. All limitations and conditions which are enforceable by the Administrator, including the requirements of the New Source Performance Standards (NSPS) and the National Emissions Standards for Hazardous Air Pollutants (NESHAPs) contained in these rules;

d. The requirements of such other State or County rules or regulations approved by the Administrator for inclusion in the State Implementation Plan (SIP);

e. The requirements of any federal regulation promulgated by the Administrator as part of the State Implementation Plan (SIP); and

f. The requirements of State and County operating permit programs, other than Title V programs, which have been approved by the Administrator and incorporated into the applicable State Implementation Plan (SIP) under the criteria for federally enforceable State Operating Permit Programs set forth in 54, Federal Register 27274, dated June 28, 1989. Such requirements include permit terms and conditions which have been entered into voluntarily by a source under this rule and/or under Rule 220-Non-Title V Permit Provisions of these rules.

200.52 **FINAL PERMIT:** The version of a permit issued by the Control Officer after completion of all review required by Maricopa County Air Pollution Control Regulations.

200.53 **FUEL OIL:** Number 2 through Number 6 fuel oils as specified in ASTM D-396-90a-Specification for Fuel Oils, gas turbine fuel oils Numbers 2-GT through 4-GT as specified in ASTM D-2880-90a-Specification for Gas Turbine Fuel Oils, or diesel fuel oils Numbers 2-D and 4-D as specified in ASTM D-975-90a-Specification for Diesel Fuel Oils.

200.54 **FUGITIVE EMISSION:** Any emission which could not reasonably pass through a stack, chimney, vent, or other functionally equivalent opening.

200.55 **HAZARDOUS AIR POLLUTANT REASONABLY AVAILABLE CONTROL TECHNOLOGY (HAPRACT):** An emissions standard for hazardous air pollutants which the Control Officer, acting pursuant to §49-480.04(C), determines is reasonably available for a source. In making the foregoing determination, the Control Officer shall take into consideration the estimated actual air quality impact of the standard, the cost of complying with the standard, the demonstrated reliability and widespread use of the technology required to meet the standard, and any non-air quality health and environmental impacts and energy requirements. For purposes of this definition, an emissions standard may be expressed as a numeric emissions limitation or as a design, equipment, work practice, or operational standard.

200.56 **INDIAN GOVERNING BODY:** The governing body of any tribe, band, or group of Indians subject to the jurisdiction of the United States and recognized by the United States as possessing power of self-government.

200.57 **INDIAN RESERVATION:** Any federally recognized reservation established by Treaty, Agreement, Executive Order, or Act of Congress.

200.58 **INSIGNIFICANT ACTIVITY:** For the purpose of this rule, an insignificant activity shall be any activity, process, or emissions unit that is not subject to a source-specific applicable requirement, that emits no more than 0.5 ton per year of hazardous air pollutants (HAPs) and no more than two tons per year of a regulated air pollutant, and that is either included in Appendix D-List of Insignificant Activities of these rules or is approved as an insignificant activity under Rule 200-Permit Requirements of these rules. Source-specific applicable requirements include requirements for which emissions unit-specific information is needed to determine applicability.

200.59 **MAJOR MODIFICATION:** Any physical change or change in the method of operation of a major source that would result in a significant net emissions increase of any regulated air pollutant.

a. Any net emissions increase that is significant for VOCs shall be considered significant for ozone.

b. Any net emissions increase that is significant for oxides of nitrogen shall be considered significant for ozone nonattainment areas classified as marginal, moderate, serious, or severe.

c. For the purposes of this definition, the following shall not be considered a physical change or a change in the method of operation:

(1) Routine maintenance, repair, and replacement;

(2) Use of an alternative fuel or raw material by reason of an order under Sections 2(a) and (b) of the Energy Supply and Environmental Coordination Act of 1974, 15 U.S.C. §792, or by reason of a natural gas curtailment plan under the Federal Power Act, 16 U.S.C. §792–825r;

(3) Use of an alternative fuel by reason of an order or rule under Section 125-Measures To Prevent Economic Disruption or Unemployment of the Act;

(4) Use of an alternative fuel at a steam generating unit to the extent that the fuel is generated from municipal solid waste;

(5) Use of an alternative fuel or raw material by a stationary source that either:

(a) The source was capable of accommodating before December 12, 1976, unless the change would be prohibited under any federally enforceable permit condition established after December 12, 1976, under 40 CFR 52.21, or under Rule 200-Permit Requirements, Rule 210-Title V Permit Provisions, Rule 240-Permits for New Major Sources And Major Modifications To Existing Major Sources, Rule 245-Continuous Source Emission Monitoring, and Rule 270-Performance Tests of these rules; or

(b) The source is approved to use under any permit issued under 40 CFR 52.21, or under Rule 200-Permit Requirements, Rule 210-Title V Permit Provisions, Rule 240-Permits for New Major Sources And Major Modifications To Existing Major Sources, Rule 245-Continuous Source Emission Monitoring, and Rule 270-Performance Tests of these rules;

(6) An increase in the hours of operation or in the production rate, unless the change would be prohibited under any federally enforceable permit condition established after December 12, 1976, under 40 CFR 52.21, or under Rule 200-Permit Requirements, Rule 210-Title V Permit Provisions, Rule 240-Permits for New Major Sources And Major Modifications To Existing Major Sources, Rule 245-Continuous Source Emission Monitoring, and Rule 270-Performance Tests of these rules;

(7) Any change in ownership at a stationary source;

(8) The addition, replacement, or use of a pollution control project at an existing electric utility steam generating unit, unless the Control Officer determines that the addition, replacement, or use renders the unit less environmentally beneficial, or except:

(a) When the Control Officer has reason to believe that the pollution control project would result in a significant net increase in representative actual annual emissions of any criteria pollutant over levels used for that source in the most recent Title I air quality impact analysis in the area, if any, and

(b) The Control Officer determines that the increase will cause or contribute to a violation of any national ambient air quality standard, prevention of significant deterioration (PSD) increment, or visibility limitation;

(9) The installation, operation, cessation, or removal of a temporary clean coal technology demonstration project, if the project complies with:

(a) The State Implementation Plan (SIP); and

(b) Other requirements necessary to attain and maintain the national ambient air quality standards during the project and after it is terminated;

(10) For electric utility steam generating units located in attainment and unclassified areas only, the installation or operation of a permanent clean coal technology demonstration project that constitutes repowering, if the project does not result in an increase in the potential to emit of any regulated pollutant emitted by the unit. This exemption shall apply on a pollutant-by-pollutant basis; and

(11) For electric utility steam generating units located in attainment and unclassified areas only, the reactivation of a very clean coal-fired electric utility steam generating unit.

200.60 MAJOR SOURCE:

a. A major source as defined in Rule 240-Permits for New Major Sources and Major Modifications to Existing Major Sources of these rules;

b. A major source under Section 112-National Emission Standards for Hazardous Air Pollutants of the Act:

(1) For pollutants other than radionuclides, any stationary source that emits or has the potential to emit, in the aggregate, including fugitive emissions, 10 tons per year (tpy) or more of any hazardous air pollutant which has been listed under Section 112(b) of the Act, 25 tpy or more of any combination of such hazardous air pollutants, or such lesser quantity as described in Title 18-Environmental Quality, Chapter 2-Department Of Environmental Quality Air Pollution Control, Article 11-Federal Hazardous Air Pollutants of the Arizona Administrative Code. Notwithstanding the preceding sentence, emissions from any oil or gas exploration or production well (with its associated equipment) and emissions from any pipeline compressor or pump station shall not be aggregated with emissions from other similar units, whether or not such units are in a contiguous area or under common control, to determine whether such units or stations are major sources; or

(2) For radionuclides, major source shall have the meaning specified by the Administrator by rule.

c. A major stationary source, as defined in Section 302-Definitions of the Act, that directly emits or has the potential to emit 100 tpy or more of any air pollutant, including any major source of fugitive emissions of any such pollutant. The fugitive emissions of a stationary source shall not be considered in determining whether it is a major stationary source for the purpose of Section 302(j) of the

Act, unless the source belongs to one of the following categories of stationary source:

Coal cleaning plants (with thermal dryers).
Kraft pulp mills.
Portland cement plants.
Primary zinc smelters.
Iron and steel mills.
Primary aluminum ore reduction plants.
Primary copper smelters.
Municipal incinerators capable of charging more than 50 tons of refuse per day.
Hydrofluoric, sulfuric, or nitric acid plants.
Petroleum refineries.
Lime plants.
Phosphate rock processing plants.
Coke oven batteries.
Sulfur recovery plants.
Carbon black plants (furnace process).
Primary lead smelters.
Fuel conversion plants.
Sintering plants.
Secondary metal production plants.
Chemical process plants.
Fossil-fuel boilers (or combination thereof) totaling more than 250 million BTU per hour heat input.
Petroleum storage and transfer units with a total storage capacity exceeding 300,000 barrels.
Taconite ore processing plants.
Glass fiber processing plants.
Charcoal production plants.
Fossil fuel-fired steam electric plants of more than 250 million BTU per hour rated heat input.
Any other stationary source category which, as of August 7, 1980, is being regulated under Section 111-Standards of Performance for New Stationary Sources of the Act or under Section 112-National Emission Standards for Hazardous Air Pollutants of the Act.

200.61 **MAJOR SOURCE THRESHOLD:** The lowest applicable emissions rate for a pollutant that would cause the source to be a major source, at the particular time and location, under Section 200.60-Definition of Major Source of this rule.

200.62 **MALFUNCTION:** Any sudden and unavoidable failure of air pollution control equipment, process, or process equipment to operate in a normal and usual manner. Failures that are caused by poor maintenance, careless operation, or any other upset condition or equipment breakdown which could have been prevented by the exercise of reasonable care shall not be considered malfunctions.

200.63 MATERIAL PERMIT CONDITION:

a. For the purposes of A.R.S. §49-464(G) and A.R.S. §49-514(G), a material permit condition shall mean a condition which satisfies all of the following:

(1) The condition is in a permit or permit revision issued by the Control Officer or by the Director after the effective date of this rule.

(2) The condition is identified within the permit as a material permit condition.

(3) The condition is one of the following:

(a) An enforceable emission standard imposed to avoid classification as a major modification or major source or to avoid triggering any other applicable requirement.

(b) A requirement to install, operate, or maintain a maximum achievable control technology or hazardous air pollutant reasonably available control technology required under Rule 372-Maricopa County Hazardous Air Pollutants (HAPs) Program of these rules.

(c) A requirement for the installation or certification of a monitoring device.

(d) A requirement for the installation of air pollution control equipment.

(e) A requirement for the operation of air pollution control equipment.

(f) An opacity standard required by Section 111-Standards of Performance for New Stationary Sources of the Act or Title I-Air Pollution Prevention And Control, Part C or D, of the Act.

(4) Violation of the condition is not covered by Subsections (A) through (F) or (H) through (J) of A.R.S. §49-464 or Subsections (A) through (F) or (H) through (J) of A.R.S. §49-514.

b. For the purposes of Sections 200.63(a)(3)(c), (d), and (e) of this rule, a permit condition shall not be material where the failure to comply resulted from circumstances which were outside the control of the source.

200.64 METHOD OF OPERATION: The definition of method of operation is included in Section 200.72-Definition of Operation of this rule.

200.65 MODIFICATION: A physical change in or a change in the method of operation of a source which increases the actual emissions of any regulated air pollutant emitted by such source by more than any relevant de minimis amount, or which results in the emission of any regulated air pollutant not previously emitted by more than such de minimis amount.

200.66 NET EMISSIONS INCREASE:

a. The amount by which the sum of Section 200.66(a)(1) and Section 200.66(a)(2) below exceed zero:

(1) Any increase in actual emissions from a particular physical change or change in the method of operation at a stationary source; and

(2) Any other increases and decreases in actual emissions at the source that are contemporaneous with the particular change and are otherwise creditable.

b. An increase or decrease in actual emissions is contemporaneous with the increase from the particular change only if it occurs between:

(1) The date five years before construction on the particular change commences; and

(2) The date that the increase from the particular change occurs.

c. An increase or decrease in actual emissions is creditable only if the Control Officer has not relied on it in issuing a permit, which is in effect when the increase in actual emissions from the particular change occurs. In addition, in nonattainment areas, a decrease in actual emissions shall be considered in determining net emissions increase due to modifications only if the State has not relied on it in demonstrating attainment or reasonable further progress.

d. An increase or decrease in actual emissions of sulfur dioxide, nitrogen oxides, or particulate matter which occurs before the applicable baseline date, as described in Rule 500-Attainment Area Classification of these rules, is creditable only if it is required to be considered in calculating the amount of maximum allowable increases remaining available.

e. An increase in actual emissions is creditable only to the extent that the new level of actual emissions exceeds the old level.

f. A decrease in actual emissions is creditable only to the extent that:

(1) The old level of actual emissions or the old level of allowable emissions, whichever is lower, exceeds the new level of actual emissions;

(2) The emissions unit was actually operated and emitted the specific pollutant;

(3) It is federally enforceable at and after the time that actual construction on the particular change begins; and

(4) It has approximately the same qualitative significance for public health and welfare as that attributed to the increase from the particular change.

g. An increase that results from a physical change at a source occurs when the emissions unit on which construction occurred becomes operational and begins to emit a particular pollutant. Any replacement unit that requires shakedown becomes operational only after a reasonable shakedown period, not to exceed 180 days.

200.67 **NEW SOURCE:** Any source that is not an existing source.

200.68 **NITROGEN OXIDES (NO_x):** All oxides of nitrogen except nitrous oxide, as measured by test methods set forth in the Appendices to 40 CFR 60.

200.69 **NONATTAINMENT AREA:** An area so designated by the Administrator, acting under Section 107-Air Quality Control Regions of the Act, as exceeding national primary or secondary ambient air standards for a particular pollutant or pollutants.

200.70 **NON-PRECURSOR ORGANIC COMPOUND:** Any of the organic compounds that have been designated by the EPA as having negligible photochemical reactivity as listed in Appendix G of these rules.

200.71 **OPEN OUTDOOR FIRE:** Any combustion of material of any type outdoors, where the products of combustion are not directed through a flue.

200.72 **OPERATION:** Any physical action resulting in a change in the location, form, or physical properties of a material, or any chemical action resulting in a change in the chemical composition or properties of a material.

200.73 **ORGANIC COMPOUND:** Any compound of carbon, excluding carbon monoxide, carbon dioxide, carbonic acid, metallic carbides or carbonates, and ammonium carbonate.

200.74 **ORGANIC LIQUID:** Any organic compound which exists as a liquid under any actual conditions of use, transport, or storage.

200.75 **OWNER AND/OR OPERATOR:** Any person who owns, leases, operates, controls, or supervises an affected facility or a stationary source of which an affected facility is a part.

200.76 **PARTICULATE MATTER:** Any material, except condensed water containing no more than analytical trace amounts of other chemical elements or compounds, which has a nominal aerodynamic diameter smaller than 100 microns (micrometers) and which exists in a finely divided form as a liquid or solid at actual conditions.

200.77 **PERMITTING AUTHORITY:** The department or a County department or agency that is charged with enforcing a permit program adopted under A.R.S. §49-480, Subsection A.

200.78 **PERSON:** Any individual, public or private corporation, company, partnership, firm, association or society of persons, the Federal Government and any of its departments or agencies, or the State and any of its agencies, departments or political subdivisions.

200.79 **PHYSICAL CHANGE:** Any replacement, addition, or alteration of equipment that is not already allowed under the terms of the source's permit.

200.80 **PM2.5:** Particulate matter with an aerodynamic diameter less than or equal to a nominal 2.5 microns (micrometers), as measured by the applicable State and Federal Reference Test Methods.

200.81 **PM10:** Particulate matter with an aerodynamic diameter less than or equal to a nominal 10 microns (micrometers), as measured by the applicable State and Federal Reference Test Methods.

200.82 **POLLUTANT:** An air contaminant the emissions or ambient concentration of which is regulated under these rules.

200.83 **POLLUTION CONTROL PROJECT:** Any activity or project undertaken at an existing electric utility steam generating unit to reduce emissions from the unit. The activities or projects are limited to:

a. The installation of conventional or innovative pollution control technology, including but not limited to advanced flue gas desulfurization, sorbent injection for sulfur dioxide and nitrogen oxides controls, and electrostatic precipitators;

b. An activity or project to accommodate switching to a fuel less polluting than the fuel used before the activity or project, including but not limited to natural gas or coal reburning, or the co-firing of natural gas and other fuels for the purpose of controlling emissions;

c. A permanent clean coal technology demonstration project, conducted under Title II, Section 101(d) of the Further Continuing Appropriation Act of 1985 (42 U.S.C. 5903(d)) or subsequent appropriations up to a total amount of $2,500,000,000 for commercial demonstration of clean coal technology, or similar projects funded through appropriations for the EPA; or

d. A permanent clean coal technology demonstration project that constitutes a repowering project.

200.84 **PORTABLE SOURCE:** Any stationary source that is capable of being transported and operated in more than one county of this state.

200.85 **POTENTIAL TO EMIT:** The maximum capacity of a stationary source to emit pollutants, excluding secondary emissions, under its physical and operational design. Any physical or operational limitation on the capacity of the source to emit a pollutant, including air pollution control equipment and restrictions on hours of operation or on the type or amount of material combusted, stored, or processed, shall be treated as part of its design, if the limitation or the effect it would have on emissions is federally enforceable.

200.86 **PROPOSED PERMIT:** The version of a permit for which the Control Officer offers public participation under Rule 210-Title V Permit Provisions of these rules or offers affected State review under Rule 210-Title V Permit Provisions of these rules.

200.87 **PROPOSED FINAL PERMIT:** The version of a Title V permit that the Control Officer proposes to issue and forwards to the Administrator for review, in compliance with Rule 210-Title V Permit Provisions of these rules.

200.88 **QUANTIFIABLE:** With respect to emissions, including the emissions involved in equivalent emission limits and emission trades, capable of being measured or otherwise determined in terms of quantity and assessed in terms of character. Quantification may be based on emission factors, stack tests, monitored values,

operating rates and averaging times, materials used in a process or production, modeling, or other reasonable measurement practices.

200.89 REACTIVATION OF A VERY CLEAN COAL-FIRED ELECTRIC UTILITY STEAM GENERATING UNIT: Any physical change or change in the method of operation, associated with commencing commercial operations by a coal-fired utility unit after a period of discontinued operation, if the unit:

a. Has not been in operation for the 2-year period before enactment of the Clean Air Act Amendments of 1990 and the emissions from the unit continue to be carried in the Maricopa County emissions inventory at the time of enactment;

b. Was equipped before shutdown with a continuous system of emissions control that achieves a removal efficiency for sulfur dioxide of no less than 85% and a removal efficiency for particulates of no less than 98%;

c. Is equipped with low nitrogen oxides (NO_X) burners before commencement of operations following reactivation; and

d. Is otherwise in compliance with the Act.

200.90 REASONABLY AVAILABLE CONTROL TECHNOLOGY (RACT): For facilities subject to Regulation III-Control of Air Contaminants of these rules, the emissions limitation of the existing source performance standard. For facilities not subject to Regulation III-Control of Air Contaminants of these rules, the lowest emission limitation that a particular source is capable of achieving by the application of control technology that is reasonably available considering technological and economic feasibility. Such technology may previously have been applied to a similar, but not necessarily identical, source category. RACT for a particular facility, other than a facility subject to Regulation III-Control of Air Contaminants of these rules, is determined on a case-by-case basis, considering the technological feasibility and cost-effectiveness of the application of the control technology to the source category.

200.91 REFERENCE METHOD: Any of the methods of sampling and analyzing for an air pollutant as described in the Arizona Testing Manual for Air Pollutant Emissions; 40 CFR 50, Appendices A through L; 40 CFR 52, Appendices D and E; 40 CFR 60, Appendices A through F; and 40 CFR 61, Appendices B and C.

200.92 REGULATED AIR POLLUTANT: Any of the following:

a. Any conventional air pollutant as defined in A.R.S. §49-401.01, which means any pollutant for which the Administrator has promulgated a primary or a secondary national ambient air quality standard (NAAQS) (i.e., for carbon monoxide (CO), nitrogen oxides (NO_X), lead, sulfur oxides (SO_X) measured as sulfur dioxides (SO_2), ozone, and particulates).

b. Nitrogen oxides (NO_X) and volatile organic compounds (VOCs).

c. Any air contaminant that is subject to a standard contained in Rule 360-New Source Performance Standards of these rules or promulgated under Section 111-Standards of Performance for New Stationary Sources of the Act.

d. Any hazardous air pollutant (HAP) as defined in Rule 372-Maricopa County Hazardous Air Pollutants (HAPs) Program of these rules.

e. Any Class I or II substance listed in Section 602-Stratospheric Ozone Protection; Listing of Class I and Class II Substances of the Act.

200.93 **REGULATORY REQUIREMENTS:** All applicable requirements, Department rules, and all State requirements pertaining to the regulation of air contaminants.

200.94 **REPLICABLE:** With respect to methods or procedures sufficiently unambiguous such that the same or equivalent results would be obtained by the application of the method or procedure by different users.

200.95 **REPOWERING:** The Control Officer shall give expedited consideration to permit applications for any source that satisfies the following criteria and that is granted an extension under Section 409-Repowered Sources of the Act:

a. Repowering means replacing an existing coal-fired boiler with one of the following clean coal technologies:

(1) Atmospheric or pressurized fluidized bed combustion;

(2) Integrated gasification combined cycle;

(3) Magnetohydrodynamics;

(4) Direct and indirect coal-fired turbines;

(5) Integrated gasification fuel cells; or

(6) As determined by the Administrator, in consultation with the United States Secretary of Energy, a derivative of one or more of the above listed technologies; and

(7) Any other technology capable of controlling multiple combustion emissions simultaneously with improved boiler or generation efficiency and with significantly greater waste reduction relative to the performance of technology in widespread commercial use as of November 15, 1990.

b. Repowering also includes any oil, gas, or oil and gas-fired units which have been awarded clean coal technology demonstration funding as of January 1, 1991 by the United States Department of Energy.

200.96 **REPRESENTATIVE ACTUAL ANNUAL EMISSIONS:** The average rate, in tons per year, at which the source is projected to emit a pollutant for the 2-year period after a physical change or change in the method of operation of a unit (or a different consecutive 2-years within 10 years after that change, if the Control Officer determines that the different period is more representative of source operations), considering the effect the change will have on increasing or decreasing the hourly emission rate and on projected capacity utilization. In projecting future emissions, the Control Officer shall:

a. Consider all relevant information, including but not limited to historical operational data, the company's representations, filings with the Maricopa County, State or Federal regulatory authorities, and compliance plans under Title IV-Acid Deposition Control of the Act; and

b. Exclude, in calculating any increase in emissions that result from the particular physical change or change in the method of operation at an electric utility steam generating unit, that portion of the unit's emissions, following the change, that could have been accommodated during the representative baseline period and that is attributable to an increase in projected capacity utilization at the unit unrelated to the particular change, including any increased utilization due to the rate of electricity demand growth for the utility system as a whole.

200.97 RESPONSIBLE OFFICIAL: One of the following:

a. For a corporation: A president, secretary, treasurer, or vice-president of the corporation in charge of a principal business function, or any other person who performs similar policy or decision-making functions for the corporation, or a duly authorized representative of such person if the representative is responsible for the overall operation of one or more manufacturing, production, or operating facilities applying for or subject to a permit and either;

(1) The sources employ more than 250 persons or have gross annual sales or expenditures exceeding $25 million (in second quarter 1980 dollars); or

(2) The delegation of authority to such representatives is approved in advance by the permitting authority;

b. For a partnership or sole proprietorship: A general partner or the proprietor, respectively;

c. For a municipality, State, Federal, or other public agency: Either a principal executive officer or ranking elected official. For the purposes of this rule, a principal executive officer of a Federal agency includes the chief executive officer having responsibility for the overall operations of a principal geographic unit of the agency (e.g., a Regional Administrator); or

d. For affected sources:

(1) The designated representative insofar as actions, standards, requirements, or prohibitions under Title IV-Acid Deposition Control of the Act or the regulations promulgated thereunder are concerned; and

(2) The designated representative for any other purposes under 40 CFR, Part 70.

200.98 SCHEDULED MAINTENANCE: Preventive maintenance undertaken in order to avoid a potential breakdown or upset of air pollution control equipment.

200.99 SIGNIFICANT:

a. In reference to a net emissions increase or the potential of a source to emit any of the following pollutants, a rate of emissions that would equal or exceed any one of the following rates:

Pollutant	Emissions Rate (TPY)
Carbon Monoxide	100
Nitrogen Oxides	40
Sulfur Dioxide	40
Particulate Matter	25
PM_{10}	15
VOC	40
Lead	0.6
Fluorides	3
Sulfuric Acid Mist	7
Hydrogen Sulfide (H_2S)	10
Total Reduced Sulfur (including hydrogen sulfide)	10
Reduced Sulfur Compounds (including hydrogen sulfide)	10
Municipal waste combustor organics (measured as total tetra-through-octa-chlorinated: dibenzo-p-dioxins and dibenzofurans)	3.5×10^{-6}
Municipal waste combustor metals (measured as particulate matter)	15
Municipal waste combustor acid gases (measured as sulfur dioxide and hydrogen chloride)	40
Municipal solid waste landfill emissions(measured as nonmethane organic compounds)	50

b. In ozone nonattainment areas classified as serious or severe, significant emissions of VOC shall be determined under Rule 240-Permit Requirements for New Major Sources and Major Modifications to Existing Major Sources of these rules.

c. In reference to a regulated air pollutant that is not listed in Section 200.99(a) of this rule, is not a Class I nor a Class II substance listed in Section 602-Listing of Class I and Class II Substances of the Act and is not a hazardous air pollutant according to Rule 372-Maricopa County Hazardous Air Pollutants (HAPs) Program of these rules, any emissions rate.

d. Notwithstanding the emission amount listed in Section 200.99(a) of this rule, any emissions rate or any net emissions increase associated with a major source or major modification, which would be constructed within 10 kilometers (6.2 miles) of a Class I area and which would have an impact on the ambient air quality of such area equal to or greater than 1 microgram/cubic meter (mg/m^3) (24-hour average).

200.100 **SOLVENT-BORNE COATING MATERIAL:** Any liquid coating-material in which the solvent is primarily or solely a VOC. For the purposes of this definition, "primarily" means that of the total solvent mass that evaporates from the coating, the VOC portion weighs more than the non-VOC portion.

200.101 **SOURCE:** Any building, structure, facility, or installation that may cause or contribute to air pollution.

200.102 **SPECIAL INSPECTION WARRANT:** An order, in writing, issued in the name of the State of Arizona, signed by a magistrate, directed to the Control Officer or his deputies authorizing him to enter into or upon public or private property for the purpose of making an inspection authorized by law.

200.103 **STANDARD CONDITIONS:** A temperature of 293K (68 degrees Fahrenheit or 20 degrees Celsius) and a pressure of 101.3 kilopascals (29.92 in. Hg or 1013.25 mb). When applicable, all analyses and tests shall be calculated and reported at standard gas temperatures and pressure values.

200.104 **STATE IMPLEMENTATION PLAN (SIP):** The plan adopted by the State Of Arizona which provides for implementation, maintenance, and enforcement of such primary and secondary ambient air quality standards as are adopted by the Administrator under the Act.

200.105 **STATIONARY SOURCE:** Any source that operates at a fixed location and that emits or generates regulated air pollutants.

200.106 **SYNTHETIC MINOR:** Any source whose maximum capacity to emit a pollutant under its physical and operational design would exceed the major source threshold levels but is restricted by an enforceable emissions limitation that prevents such source from exceeding major source threshold levels.

200.107 **TEMPORARY CLEAN COAL TECHNOLOGY DEMONSTRATION PROJECT:** A clean coal technology demonstration project operated for five years or less and that complies with the SIP and other requirements necessary to attain and maintain the national ambient air quality standards during the project and after the project is terminated.

200.108 **TITLE V:** Title V of the Federal Clean Air Act as amended in 1990 and the 40 CFR Part 70 EPA regulations adopted to implement the Act.

200.109 **TOTAL REDUCED SULFUR (TRS):** The sum of the sulfur compounds, primarily hydrogen sulfide, methyl mercaptan, dimethyl sulfide, and dimethyl disulfide, that are released during kraft pulping and other operations and measured by Method 16 in 40 CFR 60, Appendix A.

200.110 **TRADE SECRETS:** Information to which all of the following apply:

a. A person has taken reasonable measures to protect from disclosure and the person intends to continue to take such measures.

b. The information is not, and has not been, reasonably obtainable without the person's consent by other persons, other than governmental bodies, by use of legitimate means, other than discovery based on a showing of special need in a judicial or quasi-judicial proceeding.

c. No statute, including A.R.S. §49-487, specifically requires disclosure of the information to the public.

d. The person has satisfactorily shown that disclosure of the information is likely to cause substantial harm to the business's competitive position.

200.111 **TRIVIAL ACTIVITY:** For the purpose of this rule, a trivial activity shall be any activity, process, or emissions unit that, in addition to meeting the criteria for insignificant activity, has extremely low emissions. No activity, process, or emissions unit that is conducted as part of a manufacturing process or is related to the source's primary business activity shall be considered trivial. Trivial activities are listed in Appendix E of these rules and may be omitted from Title V permit applications and from Non-Title V permit applications.

200.112 **UNCLASSIFIED AREA:** An area which the Administrator, because of lack of adequate data, is unable to classify as an attainment or nonattainment area for a specific pollutant. For purposes of these rules, unclassified areas are to be treated as attainment areas.

200.113 **VOLATILE ORGANIC COMPOUND (VOC):** Any organic compound which participates in atmospheric photochemical reactions, except the non-precursor organic compounds.

SECTION 300 – STANDARDS

301 **AIR POLLUTION PROHIBITED**: No person shall discharge from any source whatever into the atmosphere regulated air pollutants which exceed in quantity or concentration that specified and allowed in these rules, the Arizona Administrative Code or A.R.S., or which cause damage to property, or unreasonably interfere with the comfortable enjoyment of life or property of a substantial part of a community, or obscure visibility, or which in any way degrade the quality of the ambient air below the standards established by the Board Of Supervisors or the Director.

302 **APPLICABILITY OF MULTIPLE RULES**: Whenever more than one standard in this rule applies to any source or whenever a standard in this rule and a standard in the Maricopa County Air Pollution Control Regulations Regulation III-Control Of Air Contaminants applies to any source, the rule or combination of rules resulting in the lowest rate or lowest concentration of regulated air pollutants released to the atmosphere shall apply, unless otherwise specifically exempted or designated.

SECTION 400 – ADMINISTRATIVE REQUIREMENTS

401 **CERTIFICATION OF TRUTH, ACCURACY, AND COMPLETENESS**: Any application form or report submitted under these rules shall contain certification by a responsible official of truth, accuracy, and completeness of the application form or report as of the time of submittal. This certification and any other certification required under these rules shall state that, based on information and belief formed after reasonable inquiry, the statements and information in the document are true, accurate, and complete.

402 CONFIDENTIALITY OF INFORMATION:

402.1 The Control Officer shall make all permits, including all elements required to be in the permit under Rule 210-Title V Permit Provisions of these rules and Rule 220-Non-Title V Permit Provisions of these rules, available to the public.

402.2 Any records, reports, or information obtained from any person under these rules shall be available to the public, unless the Control Officer has notified the person in writing as specified in Section 402.3 of this rule and unless a person:

a. Precisely identifies the information in the permit(s), records, or reports, which is considered confidential.

b. Provides sufficient supporting information to allow the Control Officer to evaluate whether such information satisfies the requirements related to trade secrets as defined in Section 200.110 of this rule.

402.3 Within 30 days of receipt of a notice of confidentiality that complies with Section 402.2 of this rule, the Control Officer shall make a determination as to whether the information satisfies the requirements for trade secrets as described in Section 200.110 of this rule and so notify the applicant in writing. If the Control Officer agrees with the applicant that the information covered by the notice of confidentiality satisfies the statutory requirements, the Control Officer shall include a notice in the administrative record of the permit application that certain information has been considered confidential.

402.4 A claim of confidentiality shall not excuse a person from providing any and all information required or requested by the Control Officer.

402.5 A claim of confidentiality shall not be a defense for failure to provide such information.

SECTION 500 – MONITORING AND RECORDS

501 REPORTING REQUIREMENTS: The owner and/or operator of any air pollution source shall maintain records of all emissions testing and monitoring, records detailing all malfunctions which may cause any applicable emission limitation to be exceeded, records detailing the implementation of approved control plans and compliance schedules, records required as a condition of any permit, records of materials used or produced, and any other records relating to the emission of air contaminants which may be requested by the Control Officer.

502 DATA REPORTING: When requested by the Control Officer, a person shall furnish to the Department information to locate and classify air contaminant sources according to type, level, duration, frequency, and other characteristics of emissions and such other information as may be necessary. This information shall be sufficient to evaluate the effect on air quality and compliance with these rules. The owner and/or operator of a source requested to submit information under Section 501 of this rule may subsequently be required to submit annually, or at such intervals specified by the Control Officer, reports detailing any

changes in the nature of the source since the previous report and the total annual quantities of materials used or air contaminants emitted.

503 **EMISSION STATEMENTS REQUIRED AS STATED IN THE ACT**: Upon request of the Control Officer and as directed by the Control Officer, the owner and/or operator of any source which emits or may emit oxides of nitrogen (NO_X) or volatile organic compounds (VOC) shall provide the Control Officer with an emission statement, in such form as the Control Officer prescribes, showing measured actual emissions or estimated actual emissions of NO_X and VOC from that source. At a minimum, the emission statement shall contain all information required by the Consolidated Emissions Reporting Rule in 40 CFR 51, Subpart A, Appendix A, Table 2A, which is incorporated by reference in Appendix G of these rules. The statement shall contain emissions for the time period specified by the Control Officer. The statement shall also contain a certification by a responsible official of the company that the information contained in the statement is accurate to the best knowledge of the individual certifying the statement. Statements shall be submitted annually to the Department. The Control Officer may waive this requirement for the owner and/or operator of any source which emits less than 25 tons per year of oxides of nitrogen or volatile organic compounds with an approved emission inventory for sources based on AP-42 or other methodologies approved by the Administrator.

504 **RETENTION OF RECORDS**: Information and records required by applicable requirements and copies of summarizing reports recorded by the owner and/or operator and submitted to the Control Officer shall be retained by the owner and/or operator for five years after the date on which the information is recorded or the report is submitted. Non-Title V sources may retain such information, records, and reports for less than five years, if otherwise allowed by these rules.

505 **ANNUAL EMISSIONS INVENTORY REPORT**:

505.1 Upon request of the Control Officer and as directed by the Control Officer, the owner and/or operator of a business shall complete and shall submit to the Control Officer an annual emissions inventory report. The report is due by April 30, or 90 days after the Control Officer makes the inventory form(s) available, whichever occurs later. These requirements apply whether or not a permit has been issued and whether or not a permit application has been filed.

505.2 The annual emissions inventory report shall be in the format provided by the Control Officer.

505.3 The Control Officer may require submittal of supplemental emissions inventory information forms for air contaminants under A.R.S. §49-476.01, A.R.S. §49-480.03, and Rule 372-Maricopa County Hazardous Air Pollutants (HAPs) Program of these rules.

REGULATION I - GENERAL PROVISIONS

RULE 110
VIOLATIONS

INDEX

SECTION 100 - GENERAL

101 PURPOSE

SECTION 200 - DEFINITIONS (NOT INCLUDED)

SECTION 300 - STANDARDS

301 VIOLATIONS AND ORDER OF ABATEMENT

302 CIVIL PENALTIES

303 CRIMINAL PENALTIES

SECTION 400 - ADMINISTRATIVE REQUIREMENTS (NOT INCLUDED)

SECTION 500 - MONITORING AND RECORDS (NOT INCLUDED)

Adopted 11/15/93

Revised 02/15/95

MARICOPA COUNTY
AIR POLLUTION CONTROL REGULATIONS

REGULATION I - GENERAL PROVISIONS

RULE 110
VIOLATIONS

SECTION 100 - GENERAL

101 PURPOSE: To specify the classification of violations of the provisions of these rules.

SECTION 300 - STANDARDS

301 VIOLATIONS AND ORDER OF ABATEMENT: When the Control Officer has reasonable cause to believe that any person has violated or is in violation of any provision of these rules or any requirement of a permit issued pursuant to these rules, he may serve upon such person by certified mail or in person an order of abatement or may file a complaint in Superior Court alleging a violation pursuant to ARS§49-513. The order shall state with particularity the act constituting the violation, shall state in its entirety the certain requirement, provision or rule violated, shall state the duration of the order and shall state that the alleged violator is entitled to a hearing, if such hearing is requested in writing within 30 days after the date of issuance of the order. The order may be conditional and may require a person to refrain from particular acts unless certain conditions are met. An order issued under this rule shall require the persons to whom it is issued to comply with the requirement, provision or rule as expeditiously as practicable. In the case of a source required to obtain a permit pursuant to this rule and Title V of the Clean Air Act, the order shall require compliance no later than one year after the date the order was issued, and shall be nonrenewable.

302 CIVIL PENALTIES: Any person who violates any of these rules or any permit or permit condition issued by the Control Officer or any fee or filing requirement required by these rules may be subject to civil penalties pursuant to ARS§49-513.

303 CRIMINAL PENALTIES: Any person who violates any of these rules or any permit or permit condition issued by the Control Officer may be guilty of a Class I

misdemeanor for each day the violation continues pursuant to ARS§49-502 and may be subject to criminal penalties pursuant to ARS§49-514.

REGULATION I - GENERAL PROVISIONS

RULE 120
CONDITIONAL ORDERS

INDEX

SECTION 100 - GENERAL

101 PURPOSE

SECTION 200 - DEFINITIONS (NOT INCLUDED)

SECTION 300 - STANDARDS (NOT INCLUDED)

SECTION 400 - ADMINISTRATIVE REQUIREMENTS

401 GRANTING A CONDITIONAL ORDER

402 PROCEDURES FOR FILING A PETITION FOR A CONDITIONAL ORDER

403 DECISIONS ON A PETITION FOR A CONDITIONAL ORDER

404 PROCESSING FEE

405 TERMS OF A CONDITIONAL ORDER

406 NOTICE OF VIOLATION

SECTION 500 - MONITORING AND RECORDS (NOT INCLUDED)

Adopted 11/15/93

MARICOPA COUNTY
AIR POLLUTION CONTROL REGULATIONS

REGULATION I - GENERAL PROVISIONS

RULE 120
CONDITIONAL ORDERS

SECTION 100 - GENERAL

101 PURPOSE: To specify procedures that shall apply to petitions for conditional orders filed with the Control Officer.

SECTION 400 - ADMINISTRATIVE REQUIREMENTS

401 GRANTING A CONDITIONAL ORDER: The Control Officer may grant to any person a conditional order for each air pollution source which allows such person to vary from any provision of ARS Title 49, Chapter 3, Article 3, these rules, for any non-federally enforceable requirement of a permit issued pursuant to these rules if the Control Officer makes each of the following findings:

401.1 Issuance of the conditional order will not endanger public health or the environment, impede attainment or maintenance of the national ambient air quality standards, or constitute a violation of the Act, and

401.2 Either of the following is true:

a. There has been a breakdown of equipment or upset of operations beyond the control of the petitioner which causes the source to be out of compliance with the requirements of these rules, the source was in compliance with the requirements of these rules before the breakdown or upset, and the breakdown or upset may be corrected within a reasonable time.

b. There is no reasonable relationship between the economic and social cost of, and benefits to be obtained from, achieving compliance.

401.3 The source is not considered a Title V source.

401.4 The Control Officer may not issue a conditional order which allows a source to vary from the requirement to obtain a permit issued pursuant to Rules 200, 210, 220, or 230 of these rules.

402 PROCEDURES FOR FILING A PETITION FOR A CONDITIONAL ORDER: The following procedures shall apply to a person seeking a conditional order from the Control Officer:

402.1 The person shall file a petition for a conditional order with the Control Officer and pay the conditional order fee required by Rule 280 of these rules. The petition shall contain at a minimum:

a. A description of any breakdown of equipment or upset of operations beyond the control of the petitioner, which causes the source to be out of compliance with the requirements of these rules.

b. A description of corrective action being undertaken to bring the source back into compliance.

c. An estimate of emissions related to the breakdown or upset.

d. A compliance schedule with a date of final compliance and interim dates as appropriate.

e. An explanation of any relationship between the economic and social cost of, and benefits to be obtained from, achieving compliance.

402.2 If the issuance of the conditional order requires a public hearing pursuant to ARS§49-491B, Rule 210, or Rule 220 of these rules, the Control Officer shall set the hearing date within 30 days after the filing of the petition and the hearing shall be held within 60 days after the filing of the petition.

402.3 Notice of the filing of a petition for a conditional order and of the hearing date on said petition shall be published in the manner provided in Rule 210 or Rule 220 of these rules and in ARS§49-498.

402.4 At the time the Control Officer publishes the first notice, the applicant shall post a notice containing the information required in Rule 210, Section 408 of these rules at the site where the source is or may be located. Consistent with federal, state, and local law, the posting shall be prominently placed at a location under the applicant's legal control, adjacent to the nearest public roadway, and visible to the public using the public roadway. The applicant shall place an additional posting providing notice of the hearing. Any posting shall be maintained until the public comment period is closed.

402.5 The Control Officer shall provide at least 30 days from the date of the first notice for public comment. The Control Officer shall keep a record of the

commenters and of the issues raised during the public participation process and shall prepare written responses to all comments received. At the time a final decision is made, the record and copies of the Control Officer's responses shall be made available to the applicant and all commenters.

403 DECISIONS ON A PETITION FOR A CONDITIONAL ORDER: Decisions on petitions for a conditional order shall be made as follows:

403.1 For any conditional order that requires a revision to the State Implementation Plan (SIP), the Control Officer shall comply with the requirements contained in 40 CFR 51, Subpart F and shall submit the conditional order to the Director.

403.2 For any other conditional order, the Control Officer shall grant or deny the petition on such terms and conditions as the Control Officer deems appropriate within 30 days after the conclusion of any required hearing, or, if no hearing is held, within 60 days after the filing of the petition.

404 PROCESSING FEE: A fee to cover the costs of processing a conditional order may be prescribed pursuant to Rule 280 of these rules.

405 TERMS OF A CONDITIONAL ORDER: The terms of a conditional order or its renewal shall conform to the following:

405.1 A conditional order issued by the Control Officer shall be valid for such period as the Control Officer prescribes but in no event for more than one year in the case of a source that is required to obtain a permit pursuant to these rules and Title V of the Act, and three years in the case of any other source that is required to obtain a permit pursuant to these rules.

405.2 The terms and conditions which are imposed as a condition to the granting of or to the continued existence of a conditional order shall include, but not be limited to:

a. A detailed plan for completion of corrective steps needed to conform to the provisions of this rule and to the requirements of any permit issued pursuant to this rule.

b. A requirement that necessary construction shall begin as specified in the compliance schedule.

c. Written reports as may be required.

d. Provisions regarding periodic inspections of the source for which the conditional order is granted.

405.3 A grantee of a conditional order may petition the Control Officer to renew the order. The total term of the initial period and all renewals shall not exceed three years from the date of initial issuance of the order. Petitions for renewal may be filed at any time not more than 60 days nor less than 30 days prior to the expiration of the order. The Control Officer, within 30 days of receipt of a petition, shall renew the conditional order for one year, if the petitioner is in compliance and is conforming with the terms and conditions of the conditional order. The Control Officer may refuse to renew the conditional order if, after a public hearing held within 30 days of receipt of a petition, the Control Officer finds that the petitioner is not in compliance and is not conforming with the terms and conditions of the conditional order. If, after a period of three years from the date of original issuance, the petitioner is not in compliance and is not conforming with the terms and conditions, the Control Officer may renew a conditional order for a total term of two additional years, only if the Control Officer finds that failure to comply and to conform is due to conditions beyond the control of such petitioner.

405.4 If the Board of Supervisors amends or adopts any rule imposing conditions on the operation of an air pollution source which have become applicable to the source by reason of the action of the Board of Supervisors or otherwise, and which require the implementation of control strategies necessitating the installation of additional or different air pollution control equipment, the Control Officer may renew a conditional order for an additional term. The term of the renewal shall be governed by this rule, except that the total term of the renewal shall not exceed two years.

405.5 A conditional order issued by the Control Officer shall be effective when issued unless:

a. The conditional order varies from the requirements of the SIP, in which case the conditional order shall be submitted to the Director together with a request that the conditional order be submitted to the Administrator as a revision to the SIP pursuant to Section 110(L) of the Act, and shall become effective upon approval by the Administrator.

b. The conditional order varies from the requirements of a permit issued for a source that is required to obtain a permit pursuant to Title V of the Act, in which case the conditional order shall be submitted to the Administrator if required by Section 505 of the Act, and shall be

effective at the end of the review period specified in such section, unless objected to within such period by the Administrator.

406 NOTICE OF VIOLATION: If the terms and conditions of the conditional order are being violated, the Control Officer may seek to revoke or to suspend the conditional order. In such event, the Control Officer shall serve notice of such violation on the holder of the conditional order in the manner provided in ARS§49-498. The notice shall specify the nature of such violation and the date on which a hearing will be held to determine if a violation has occurred and whether the conditional order should be suspended or revoked. The date of the hearing shall be within 30 days from the date the notice is served upon the holder of the conditional order.

REGULATION I - GENERAL PROVISIONS
RULE 130
EMERGENCY PROVISIONS

INDEX

SECTION 100 - GENERAL

101 PURPOSE

SECTION 200 – DEFINITIONS

201 EMERGENCY

SECTION 300 – STANDARDS (NOT APPLICABLE)

SECTION 400 - ADMINISTRATIVE REQUIREMENTS

SECTION 500 - MONITORING AND RECORDS (NOT APPLICABLE)

Adopted 07/26/00

MARICOPA COUNTY
AIR POLLUTION CONTROL REGULATIONS
REGULATION I - GENERAL PROVISIONS

RULE 130
EMERGENCY PROVISIONS

SECTION 100 - GENERAL

101 **PURPOSE:** To establish criteria and administrative requirements for emergencies.

SECTION 200 – DEFINITIONS: For the purpose of this rule, the following definition shall apply. See Rule 100 (General Provisions And Definitions) of these rules for definitions of terms that are used but not specifically defined in this rule.

201 **EMERGENCY –** Any situation arising from sudden and reasonably unforeseeable events beyond the control of the source, including acts of God, that require immediate corrective action to restore normal operation, and that cause the source to exceed a technology-based emission limitation under the permit, due to unavoidable increases in emissions attributable to the emergency. An emergency shall not include noncompliance to the extent caused by improperly designed equipment, lack of preventative maintenance, careless or improper operation, or operator error.

SECTION 300 – STANDARDS (NOT APPLICABLE)

SECTION 400 - ADMINISTRATIVE REQUIREMENTS

401 An emergency constitutes an affirmative defense to an action brought for noncompliance with the technology-based emission limitations, if the conditions of Section 402 of this rule are met.

402 The affirmative defense of emergency shall be demonstrated through properly signed, contemporaneous operating logs, or other relevant evidence that:

402.1 An emergency occurred and the permittee can identify the cause or causes of the emergency;

402.2 At the time of the emergency, the permitted source was being properly operated;

402.3 During the period of the emergency, the permittee took all reasonable steps to minimize levels of emissions that exceeded the emissions standards or other requirements in the permit; and

402.4 The permittee as soon as possible telephoned the Control Officer, giving notice of the emergency, and submitted notice of the emergency to the Control Officer by certified mail, facsimile, or hand delivery within 2 working

days of the time when emission limitations were exceeded due to the emergency. This notice shall contain a description of the emergency, any steps taken to mitigate emissions, and corrective action taken.

403 In any enforcement proceeding, the permittee seeking to establish the occurrence of an emergency has the burden of proof.

404 The provisions of this rule are in addition to any emergency or upset provision contained in any applicable requirement.

SECTION 500 - MONITORING AND RECORDS (NOT APPLICABLE)

REGULATION I - GENERAL PROVISIONS

RULE 140
EXCESS EMISSIONS

INDEX

SECTION 100 - GENERAL

101 PURPOSE

102 APPLICABILITY

103 EXEMPTIONS

SECTION 200 - DEFINITIONS (NOT APPLICABLE)

SEE RULE 100 (GENERAL PROVISIONS AND DEFINITIONS) OF THESE RULES FOR DEFINITIONS OF TERMS THAT ARE USED BUT NOT SPECIFICALLY DEFINED IN THIS RULE

SECTION 300 – STANDARDS (NOT APPLICABLE)

SECTION 400 - ADMINISTRATIVE REQUIREMENT

401 AFFIRMATIVE DEFENSE FOR MALFUNCTIONS

402 AFFIRMATIVE DEFENSE FOR STARTUP AND SHUTDOWN

403 AFFIRMATIVE DEFENSE FOR MALFUNCTIONS DURING SCHEDULED MAINTENANCE

404 DEMONSTRATION OF REASONABLE AND PRACTICABLE MEASURES

SECTION 500 - MONITORING AND RECORDS

Adopted 07/26/00
Revised 09/05/01

MARICOPA COUNTY
AIR POLLUTION CONTROL REGULATIONS

REGULATION I – GENERAL PROVISIONS

RULE 140
EXCESS EMISSIONS

SECTION 100 - GENERAL

101 **PURPOSE:** To establish affirmative defenses and associated administrative requirements for certain emissions in excess of an emission standard or limitation.

102 **APPLICABILITY:** Rule 140 applies to all emission standards or limitations, except for standards or limitations described in Section 103 (Exemptions) of this rule.

103 **EXEMPTIONS:** Rule 140 does not apply to standards and limitations:

103.1 Promulgated pursuant to Section 111 (Standards Of Performance for New Stationary Sources) of the Clean Air Act (Act) or Section 112 (National Emission Standards For Hazardous Air Pollutants) of the Act;

103.2 Promulgated pursuant to Title IV (Acid Deposition Control) of the Act or the regulations promulgated thereunder and incorporated under Rule 371 (Acid Rain) of these rules or Title VI (Stratospheric Ozone Protection) of the Act;

103.3 Contained in any Prevention Of Significant Deterioration (PSD) or New Source Review (NSR) permit issued by the Environmental Protection Agency (EPA);

103.4 Included in a permit to meet the requirements of Rule 240 (Permit Requirements For New Major Sources And Major Modifications To Existing Major Sources), Subsection 308.1(e) (Permit Requirements For Sources Located In Attainment And Unclassified Areas) of these rules.

SECTION 200 - DEFINITIONS (NOT APPLICABLE)

See Rule 100 (General Provisions And Definitions) of these rules for definitions of terms that are used but not specifically defined in this rule.

SECTION 300 – STANDARDS (NOT APPLICABLE)

SECTION 400 - ADMINISTRATIVE REQUIREMENTS

401 Affirmative Defense For Malfunctions: Emissions in excess of an applicable emission limitation due to malfunction shall constitute a violation. The owner and/or operator of a source with emissions in excess of an applicable emission limitation due to malfunction has an affirmative defense to a civil or administrative enforcement proceeding based on that violation, other than a judicial action seeking injunctive relief, if the owner and/or operator of the source has complied with the reporting requirements of Section 500 of this rule and has demonstrated all of the following:

401.1 The excess emissions resulted from a sudden and unavoidable breakdown of the process equipment or the air pollution control equipment beyond the reasonable control of the operator;

401.2 The source's air pollution control equipment, process equipment, or processes were at all times maintained and operated in a manner consistent with good practice for minimizing emissions;

401.3 If repairs were required, the repairs were made in an expeditious fashion when the applicable emission limitations were being exceeded. Off-shift labor and overtime were utilized where practicable to ensure that the repairs were made as expeditiously as possible. If off-shift labor and overtime were not utilized, then the owner and/or operator satisfactorily demonstrated that such measures were impractical;

401.4 The amount and duration of the excess emissions (including any bypass operation) were minimized to the maximum extent practicable during periods of such emissions;

401.5 All reasonable steps were taken to minimize the impact of the excess emissions on ambient air quality;

401.6 The excess emissions were not part of a recurring pattern indicative of inadequate design, operation, or maintenance;

401.7 During the period of excess emissions, there were no exceedances of the relevant ambient air quality standards established in Rule 510 of these rules that could be attributed to the emitting source;

401.8 The excess emissions did not stem from any activity or event that could have been foreseen and avoided, or planned, and could not have been avoided by better operations and maintenance practices;

401.9 All emissions monitoring systems were kept in operation, if at all practicable; and

401.10 The owner's and/or operator's actions in response to the excess emissions were documented by contemporaneous records.

402 Affirmative Defense For Startup And Shutdown:

402.1 Except as provided in subsection 402.2 of this rule, and unless otherwise provided for in the applicable requirement, emissions in excess of an applicable emission limitation due to startup and shutdown shall constitute a violation. The owner and/or operator of a source with emissions in excess of an applicable emission limitation due to startup and shutdown has an affirmative defense to a civil or administrative enforcement proceeding based on that violation, other than a judicial action seeking injunctive relief, if the owner and/or operator of the source has complied with the reporting requirements of Section 500 of this rule and has demonstrated all of the following:

a. The excess emissions could not have been prevented through careful and prudent planning and design;

b. If the excess emissions were the result of a bypass of control equipment, the bypass was unavoidable to prevent loss of life, personal injury, or severe damage to air pollution control equipment, production equipment, or other property;

c. The source's air pollution control equipment, process equipment, or processes were at all times maintained and operated in a manner consistent with good practice for minimizing emissions;

d. The amount and duration of the excess emissions (including any bypass operation) were minimized to the maximum extent practicable, during periods of such emissions;

e. All reasonable steps were taken to minimize the impact of the excess emissions on ambient air quality;

f. During the period of excess emissions, there were no exceedances of the relevant ambient air quality standards established in Rule 510 (Air Quality Standards) of these rules that could be attributed to the emitting source;

g. All emissions monitoring systems were kept in operation, if at all practicable; and

h. The owner's and/or operator's actions in response to the excess emissions were documented by contemporaneous records.

402.2 If excess emissions occur due to a malfunction during routine startup and shutdown, then those instances shall be treated as other malfunctions subject to Section 401 of this rule.

403 **Affirmative Defense For Malfunctions During Scheduled Maintenance:** If excess emissions occur due to malfunction during scheduled maintenance, then those instances will be treated as other malfunctions subject to Section 401 of this rule.

404 **Demonstration Of Reasonable And Practicable Measures:** For an affirmative defense under Sections 401 and 402 of this rule, the owner and/or operator of the source shall demonstrate, through submission of the data and information required by Sections 400 and 500 of this rule, that all reasonable and practicable measures within the owner's and/or operator's control were implemented to prevent the occurrence of the excess emissions.

SECTION 500 - MONITORING AND RECORDS

501 The owner and/or operator of any source shall report to the Control Officer any emissions in excess of the limits established by these rules or by the applicable permit. The report shall be in two parts as specified below:

501.1 Notification by telephone or facsimile within 24 hours of the time when the owner and/or operator first learned of the occurrence of excess emissions that includes all available information from Section 502 of this rule.

501.2 Detailed written notification by submission of an excess emissions report within 72 hours of the notification required by subsection 501.1 of this rule.

502 The excess emissions report shall contain the following information:

502.1 The identity of each stack or other emission point where the excess emissions occurred;

502.2 The magnitude of the excess emissions expressed in the units of the applicable emission limitation and the operating data and calculations used in determining the magnitude of the excess emissions;

502.3 The time and duration or expected duration of the excess emissions;

502.4 The identity of the equipment from which the excess emissions emanated;

502.5 The nature and cause of such emissions;

502.6 The steps taken, if the excess emissions were the result of a malfunction, to remedy the malfunction and the steps taken or planned to prevent the recurrence of such malfunctions;

502.7 The steps that were or are being taken to limit the excess emissions; and

502.8 If the source's permit contains procedures governing source operation during periods of startup or malfunction and the excess emissions resulted from startup or malfunction, a list of the steps taken to comply with the permit procedures.

503 In the case of continuous or recurring excess emissions, the notification requirements of this rule shall be satisfied if the source provides the required notification after excess emissions are first detected and includes in the notification an estimate of the time the excess emissions will continue. Excess emissions occurring after the estimated time period or changes in the nature of the emissions

as originally reported shall require additional notification pursuant to Section 501 and Section 502 of this rule.

REGULATION II – PERMITS AND FEES

RULE 200
PERMIT REQUIREMENTS

INDEX

SECTION 100 – GENERAL

101 PURPOSE

SECTION 200 – DEFINITIONS (NOT APPLICABLE)

SECTION 300 – STANDARDS

301 PERMITS REQUIRED

302 TITLE V PERMIT

303 NON-TITLE V PERMIT

304 GENERAL PERMIT

305 DUST CONTROL PERMIT

306 SUBCONTRACTOR REGISTRATION

307 PERMIT TO BURN

308 EXEMPTIONS

309 STANDARDS FOR APPLICATIONS

310 PERMIT CONDITIONS

311 PROHIBITION-PERMIT MODIFICATION

312 PERMIT POSTING REQUIRED

313 TRANSITION FROM INSTALLATION AND OPERATING PERMIT PROGRAM TO UNITARY PERMIT PROGRAM

314 ACCELERATED PERMITTING

SECTION 400 – ADMINISTRATIVE REQUIREMENTS

401 APPROVAL OR DENIAL OF PERMIT OR PERMIT REVISION

402 PERMIT REOPENINGS; REVOCATION AND REISSUANCE; TERMINATION

403 PERMIT RENEWAL AND EXPIRATION

404 PERMIT TRANSFERS

405 PERMITS CONTAINING THE TERMS AND CONDITIONS OF FEDERAL DELAYED COMPLIANCE ORDERS (DCO) OR CONSENT DECREES

406 APPEAL

407 AIR QUALITY IMPACT MODELS

408 TESTING PROCEDURES

409 PERMIT FEES

410 PORTABLE SOURCES

411 PUBLIC RECORDS; CONFIDENTIALITY

SECTION 500 – MONITORING AND RECORDS (NOT APPLICABLE)

Revised 07/13/88
Repealed and Adopted 11/15/93
Revised 02/15/95
Revised 06/19/96
Revised 05/20/98
Revised 08/22/01
Revised 03/26/08

MARICOPA COUNTY
AIR POLLUTION CONTROL REGULATIONS
REGULATION II – PERMITS AND FEES

RULE 200
PERMIT REQUIREMENTS

SECTION 100 – GENERAL

101 **PURPOSE:** To provide an orderly procedure for the review of new sources of air pollution and for the modification and operation of existing sources through the issuance of permits.

SECTION 200 – DEFINITIONS (NOT APPLICABLE) See Rule 100 (General Provisions and Definitions) of these rules for definitions of terms that are used but not specifically defined in this rule.

SECTION 300 – STANDARDS

301 **PERMITS REQUIRED:** Except as otherwise provided in these rules, no person shall commence construction of, operate, or make a modification to any source subject to regulation under these rules, without first obtaining a permit or permit revision from the Control Officer. The Maricopa County Air Quality Department issues the following permits: Title V permits, Non-Title V permits, General permits, Dust Control permits, and Permits to Burn. The standards and/or requirements for these permits are described in Section 302 through Section 305 and Section 307 of this rule. Additional standards, administrative requirements, and monitoring and records requirements for some of these permits are described in individual rules of these rules, as applicable/as specified in Section 302 through Section 305 and Section 307 of this rule.

302 **TITLE V PERMIT:** A Title V permit or, in the case of an existing permitted source, a permit revision shall be required for a person to commence construction of, to operate, or to modify any of the following:

302.1 Any major source as defined in Rule 100 of these rules.

302.2 Any solid waste incineration unit required to obtain a permit pursuant to Section 129(e) of the Act.

302.3 Any affected source as defined in Rule 100 of these rules.

302.4 Any source in a source category designated by the Administrator pursuant to 40 CFR 70.3 and adopted by the Board of Supervisors by rule.

303 **NON-TITLE V PERMIT:** Unless a Title V permit or a permit revision is required, a Non-Title V permit or permit revision shall be required for:

303.1 A person to make a modification to a source which would cause it to emit or to have the potential to emit quantities of regulated air pollutants greater than those specified in subsections 303.2 and 303.3(c) of this rule.

303.2 A person to commence construction of or to modify either of the following after rules adopted pursuant to A.R.S. § 49-480.04 are effective:

a. A source that emits or has the potential to emit with controls ten tons per year or more of a hazardous air pollutant or 25 tons per year or more of any combination of hazardous air pollutants designated by the Director pursuant to Rule 372 (Maricopa County Hazardous Air Pollutants (HAPs) Program) of these rules and not listed in Section 112(b) of the Act.

b. A source that is within a category designated by the Director pursuant to Rule 372 (Maricopa County Hazardous Air Pollutants (HAPs) Program) of these rules and that emits or has the potential to emit with controls at least one ton, but less than ten tons per year of a hazardous air pollutant or at least 2.5 tons, but less than 25 tons per year of any combination of hazardous air pollutants.

303.3 A person to commence construction of, to operate, or to modify any of the following:

a. Any source other than a major source, including an area source, subject to a standard, limitation, or other requirement under Section 111 of the Act.

b. Any source other than a major source, including an area source, subject to a standard or other requirement pursuant to Section 112 of the Act. However, a source is not required to obtain a permit solely because it is subject to regulation or requirements pursuant to Section 112(r) of the Act.

c. Any source that emits or has the potential to emit, without control, regulated air pollutants, except the following sources to the extent which the described limits are not exceeded. However, any source that is exempt from obtaining a Non-Title V permit according to this section shall still comply with all other applicable requirements of these rules.

(1) General Combustion Equipment:

(a) Any source with an aggregated input capacity of less than 2,000,000 BTU per hour calculated by adding only those pieces of equipment over 300,000 BTU per hour with respect to fuel burning equipment fired with natural gas or liquefied petroleum gas.

(b) Any oil fueled heating equipment with a maximum rated input capacity or an aggregated input capacity of less than 500,000 BTU (527,200 kilojoules) per hour.

(2) Liquid Storage Tanks:

(a) Stationary storage tanks with a capacity of 250 gallons (946 liters) or less used for storing organic liquids.

(b) Stationary storage tanks used for storing organic liquids with a true vapor pressure of 1.5 psia (77.5 mm Hg) or less.

(c) Pressure tanks and pressurized vessels used exclusively for the storage of liquefied gases.

(3) Surface Coating and Printing Equipment:

(a) The aggregate of all surface coating operations of a source in which no coated product is heat cured and a combined total of one gallon per day or less of all coating materials and solvents are used.

(b) Application equipment for architectural surface coatings is used for commercial and residential applications.

(c) Any coating operation, which employs only hand-held aerosol cans, where VOC emissions do not exceed three pounds on any single day.

(d) Any printing operation which employs a combination of printing presses with a maximum of 500 square inches (3226 cm^2) of impression area and a maximum of two units per printing press. For the purposes of this rule, "units" means the number of printing surfaces.

(4) Solvent Cleaning Equipment: Unheated, non-conveyorized, cleaning or coating equipment that does not include control enclosures:

(a) With an open surface area of one square meter (10.8 square feet) or less and an internal volume of 350 liters (92.5 gallons) or less, having an organic solvent loss of three gallons per day or less, or

(b) Using only organic solvents with an initial boiling point of 302°F (150°C) or greater and having an organic solvent loss of three gallons per day or less, or

(c) Using materials with a VOC content of two percent or less by volume (20 cubic centimeters per liter).

(5) Internal Combustion Equipment:

(a) Internal combustion engines with a manufacturer's maximum continuous rating of 50 horsepower or less or a maximum accumulative rating of 250 horsepower or less for engines used in the same process at one source.

(b) Internal combustion engines used solely as a source of unlimited standby power or emergency purposes and operated at or below 500 hours per year for routine testing and emergency standby operation for each internal combustion engine and provided such source demonstrates that the potential emissions at 500 hours of operation each of all internal combustion engines do not exceed 4,000 pounds of nitrogen oxides or carbon monoxide per year as evidenced by an installed hour meter or written usage records maintained by the operator; and

(i) Are only used for power when normal power line service fails; or

(ii) Are only used for the emergency pumping of water.

(iii) This exemption does not apply to internal combustion engines used as standby power due to a voluntary reduction in power by the power company.

(c) Engines used to propel motorized vehicles.

(d) Gas turbines with a maximum heat input at ISO Standard Day Conditions of less than 3,000,000 BTU (3,162,000 kilojoules) per hour fired exclusively with natural gas and/or liquefied petroleum gas.

(e) Portable internal combustion engines used on a temporary basis of no more than 30 days per calendar year at any one facility.

(6) Food Equipment:

(a) Equipment, excluding boilers, used in eating establishments or other retail establishments for the purpose of preparing food for human consumption.

(b) Bakeries:

(i) Mixers and blenders used in bakeries where the products are edible and intended for human consumption.

(ii) Ovens at bakeries whose total production is less than 10,000 pounds (4,535 kg) per operating day.

(7) Miscellaneous:

(a) Diesel contaminated soil remediation projects, where no heat is applied.

(b) Self-contained, enclosed blast and shot peen equipment where the total internal volume of the blast section is 50 cubic feet or less and where any venting is done via pollution control equipment.

(c) Those laboratory acids which have both a pH above 1.5 and an aggregate daily emission to ambient air of vapor/mists from all such acids not exceeding three pounds on any single day.

(d) Brazing or welding equipment.

(e) Hand soldering equipment.

(f) A source whose aggregate of all wood working equipment totals 50 horsepower or less.

(g) Equipment used for buffing, carving, cutting, drilling, surface grinding, machining, planing, routing, sanding, sawing, shredding, or turning of ceramic artwork, precision parts, leather, metals, plastics, rubber, fiberboard, masonry, carbon, graphite or glass.

(h) Refrigerant recovery equipment.

(i) Building maintenance or janitorial activities.

(j) A source whose aggregate of all miscellaneous equipment, processes or production lines not otherwise identified in this section has total uncontrolled emissions of less than three pounds (1.4 kg) VOC or PM_{10} during any day and less than 5.5 pounds (2.5 kg) of any other regulated air pollutant during any day.

(k) A person to begin actual construction of a source subject to Rule 372 (Maricopa County Hazardous Air Pollutants (HAPs) Program) of these rules.

(l) A person to make a modification to a source subject to Rule 372 (Maricopa County Hazardous Air Pollutants (HAPs) Program) of these rules.

304 **GENERAL PERMIT:** A General permit shall be required for a person to commence construction of, to operate, or to modify a source that is a member of a facility class for which a General permit has been developed pursuant to Rule 230 of these rules. The provisions of Rule 230 of these rules shall apply to General permits, except as otherwise provided in Rule 230 of these rules.

305 **DUST CONTROL PERMIT:** A Dust Control permit shall be required before a person, including but not limited to, the property owner, lessee, developer, responsible official, Dust Control permit applicant (who may also be the responsible party contracting to do the work), general contractor, prime contractor, supervisor, management company, or any person who owns, leases, operates, controls, or supervises a dust-generating operation subject to the requirements of Rule 310 of these rules, causes, commences, suffers, allows, or engages in any dust-generating operation that disturbs a total surface area of 0.10 acre (4,356 square feet) or more. The provisions of Rule 310 of these rules shall apply to Dust Control permits, except as otherwise provided in Rule 310 of these rules.

306 **SUBCONTRACTOR REGISTRATION:**

306.1 A subcontractor who is engaged in dust-generating operations at a site that is subject to a permit that is issued by a Control Officer and that requires control of PM_{10} emissions from dust-generating operations shall register with the Control Officer by submitting information in the manner prescribed by the Control Officer. The Control Officer shall issue a registration number after payment of the fee. The Control Officer may establish and assess a fee for the registration based on the total cost of processing the registration and issuance of a registration number.

306.2 The subcontractor shall have its registration number readily accessible on-site while conducting any dust-generating operations. The subcontractor's registration number must be visible and readable by the public without having to be asked by the public (e.g., included/posted in a sign that is visible on the subcontractor's vehicle or equipment, included/posted on a sign that is visible in the window of the subcontractor's vehicle or equipment, or included/posted on a sign where the subcontractor is working on the site).

307 **PERMIT TO BURN:** A permit is required for any open outdoor fire authorized under the exceptions in A.R.S. 49-501 or Rule 314 of these rules.

308 EXEMPTIONS: Notwithstanding Sections 301, 302, and 303 of this rule, the following sources shall not require a permit, unless the source is a major source, or unless operation without a permit would result in a violation of the Act:

308.1 Sources subject to 40 CFR 60, Subpart AAA, Standards of Performance for New Residential Wood Heaters.

308.2 Sources and source categories that would be required to obtain a permit solely because they are subject to 40 CFR 61.145.

308.3 Agricultural equipment used in normal farm operations. Agricultural equipment used in normal farm operations, for the purposes of this rule, does not include equipment that would be classified as a source that would require a permit under Title V of the Act, or would be subject to a standard under 40 CFR parts 60 or 61.

309 STANDARDS FOR APPLICATIONS: All permit applications shall be filed in the manner and form prescribed by the Control Officer. The application shall contain all the information necessary to enable the Control Officer to make the determination to grant or to deny a permit or permit revision, which shall contain such terms and conditions as the Control Officer deems necessary to assure a source's compliance with the requirements of these rules. The issuance of any permit or permit revision shall not relieve the owner or operator from compliance with any federal laws, Arizona laws, or these rules, nor does any other law, regulation or permit relieve the owner or operator from obtaining a permit or permit revision required under these rules.

309.1 Insignificant Activities:

a. Rather than supplying detailed information, a Title V source may, in its permit application, list and generally group insignificant activities, which are defined in Rule 100 – General Provisions and Definitions of these rules and which are listed in Appendix D-List of Insignificant Activities of these rules.

b. A Non-Title V source is not required to list nor to describe, in a permit application, insignificant activities, which are defined in Rule 100 – General Provisions and Definitions of these rules and which are listed in Appendix D-List of Insignificant Activities of these rules. If a Non-Title V source's emissions are approaching an applicable requirement, including but not limited to best available control technology (BACT) requirements or major source status, then such Non-Title V source may be required by Maricopa County to include, in a permit application, a description of its insignificant activities and emissions calculations for such insignificant activities.

c. An activity, process, or emissions unit that is not included in Appendix D-List of Insignificant Activities of these rules may be considered an insignificant activity if it meets the definition of insignificant activity in Rule 100 –

General Provisions and Definitions of these rules and is approved by the Control Officer and the Administrator of the Environmental Protection Agency (EPA). A source may request approval for the classification of an activity as insignificant by including such a request in its permit application, along with justification that such activity meets the definition of insignificant activity in Rule 100 – General Provisions and Definitions of these rules.

d. An application may not omit information regarding insignificant activities that is needed to determine: (1) the applicability of or to impose any applicable requirement; (2) whether the source is in compliance with applicable requirements; or (3) the fee amount required under these rules. In such cases, emissions calculations or other necessary information shall be included in the application.

309.2 Trivial Activities:

a. A Title V source is not required, in a permit application, to list trivial activities, to describe trivial activities, nor to include the emissions from trivial activities, which are defined in Rule 100 – General Provisions and Definitions of these rules and which are listed in Appendix E-List of Trivial Activities of these rules.

b. A Non-Title V source is not required, in a permit application, to list trivial activities, to describe trivial activities, nor to include the emissions from trivial activities, which are defined in Rule 100 – General Provisions and Definitions of these rules and which are listed in Appendix E-List of Trivial Activities of these rules.

c. An activity that is not included in Appendix E-List of Trivial Activities of these rules may be considered a trivial activity, if such activity meets the definition of trivial activity in Rule 100 – General Provisions and Definitions of these rules.

310 PERMIT CONDITIONS: The Control Officer may impose any permit conditions that are necessary to ensure compliance with federal laws, Arizona laws, or these rules.

310.1 The Control Officer may require, as specified in Section 310.2 and Section 310.3 of this rule, any source of regulated air pollutants to monitor, sample, or perform other studies to quantify emissions of regulated air pollutants or levels of air pollution that may reasonably be attributable to that source, if the Control Officer:

a. Determines that monitoring, sampling, or other studies are necessary to determine the effects of the source on levels of air pollution; or

b. Has reasonable cause to believe a violation of this rule, rules adopted pursuant to this rule, or a permit issued pursuant to this rule has been committed; or

c. Determines that those studies or data are necessary to accomplish the purposes of this rule and that the monitoring, sampling, or other studies by the source are necessary in order to assess the impact of the source on the emission of regulated air contaminants.

310.2 The Control Officer may require a source of air contaminants, by permit or order, to perform monitoring, sampling, or other quantification of its emissions or air pollution that may reasonably be attributed to such a source. Before requiring such monitoring, sampling, or other quantification by permit or order, the Control Officer shall consider the relative cost and accuracy of any alternatives which may be reasonable under the circumstances such as emission factors, modeling, mass balance analyses, or emissions projections. The Control Officer may require such monitoring, sampling, or other quantification by permit or order if the Control Officer determines in writing that all of the following conditions are met:

a. The actual or potential emissions of air pollution may adversely affect public health or the environment.

b. An adequate scientific basis for the monitoring, sampling, or quantification method exists.

c. The monitoring, sampling, or quantification method is technically feasible for the subject contaminant and the source.

d. The monitoring, sampling, or quantification method is reasonably accurate.

e. The cost of the method is reasonable in light of the use to be made of the data.

310.3 Orders issued or permit conditions imposed pursuant to this rule shall be appealable to the hearing board in the same manner as that prescribed for orders of abatement in A.R.S. § 49-489 and A.R.S. § 49-490 and for permit conditions in A.R.S. § 49-482.

311 PROHIBITION – PERMIT MODIFICATION: A person shall not willfully deface, alter, forge, counterfeit, or falsify any permit issued under the provisions of these rules.

312 PERMIT POSTING REQUIRED: Any person who has been granted a permit shall keep a complete permit clearly visible and accessible on the site where the equipment is installed. All equipment covered by the permit shall be listed in the permit by a serial number or other equipment identification symbol and shall be identified on a plant diagram.

313 TRANSITION FROM INSTALLATION AND OPERATING PERMIT PROGRAM TO UNITARY PERMIT PROGRAM:

313.1 Sources With a Valid Installation, Operating, or Conditional Permit: A valid installation permit or operating permit issued by the Control Officer or a valid conditional permit issued by the hearing board before September 1, 1993, and the authority to operate as provided in Laws 1992, Chapter 299, Section 65, continue in effect until any of the following occurs:

a. The Control Officer revokes an installation permit.

b. The Control Officer issues or denies a Title V permit or a Non-Title V permit to the source.

c. The hearing board revokes or modifies a conditional permit or the conditional permit expires. A source operating under a valid conditional permit may continue to operate in accordance with the terms and conditions of such permit after the expiration of the conditional permit if, at least 30 days prior to the expiration of the conditional permit, the source submits an application to the Control Officer for a Title V permit as described in Section 313.2 of this rule or for a Non-Title V permit as described in Section 313.3 of this rule.

313.2 Title V Sources With an Installation, Operating, or Conditional Permit: Following November 29, 1996, the effective date of the Environmental Protection Agency's (EPA's) final interim approval of Maricopa County's Title V permit program, a source becomes subject to the requirements of the Title V permit program, when the source meets the applicability requirements as provided in this rule. Sources which hold a valid installation, operating, or conditional permit and require a Title V permit shall comply with the following provisions:

a. The owner or operator of the source shall submit a permit application within 180 days of receipt of written notice from the Control Officer that an application is required or 12 months after the source becomes subject to the requirements of Title V of the Act and the permit requirements of these rules, whichever is earlier.

b. Any source, which has not yet submitted a Title V permit application, that wishes to make any source change not requiring a permit, an administrative permit revision, a minor permit revision, or a significant permit revision shall comply with the applicable provisions of Rule 210 of these rules.

313.3 Non-Title V Sources With an Installation, Operating, or Conditional Permit: Sources requiring a Non-Title V permit in existence on the date these rules become effective which hold a valid installation, operating, or conditional permit shall comply with the following provisions:

a. All sources shall submit a permit application to the Control Officer within 90 days of receipt of written notice from the Control Officer that an application is required.

b. Any source that wishes to make any source change not requiring a permit, an administrative permit revision, a minor permit revision, or a non-minor permit revision shall comply with the applicable provisions of Rule 220 of these rules.

313.4 Written Notice: For purposes of this subsection, written notice shall include, but not be limited to, a written warning, Notice of Violation, or order issued by the Control Officer for constructing or operating an emission source without a permit. Such a source shall be considered to be in violation of these rules on each day of operation or each day during which construction continues, until a permit is granted.

313.5 Sources Not Under Permit:

a. All sources not in existence prior to the effective date of these rules shall first submit to the Control Officer an air quality permit application for the entire source and shall have been issued an air quality permit before commencing construction of such source.

b All sources in existence on the date these rules become effective and not holding a valid installation permit and/or a valid operating permit issued by the Control Officer, which have not applied for a Non-Title V permit pursuant to these rules, shall submit to the Control Officer a permit application for the entire source.

c. All sources in existence on the date these rules become effective and not holding a valid installation permit and/or a valid operating permit issued by the Control Officer, which have not applied for a Title V permit pursuant to these rules, shall submit to the Control Officer a Title V permit application no more than 12 months after becoming subject to Title V permit requirements.

313.6 Sources Which Currently Have an Installation or Operating Permit:

a. For sources in existence on the date these rules become effective holding a valid installation permit and/or a valid operating permit issued by the Control Officer, the Control Officer may establish a phased schedule for acting on permit applications received within the first full year after the source becomes subject to obtaining a Title V or a Non-Title V permit under these rules. The schedule shall assure that at least one-third of such applications will be acted on annually over a period not to exceed three years after such effective date. Based on this schedule, the Control Officer shall review a completed application in accordance with the provisions of these rules and shall issue or deny the applicable permit within 18 months after the receipt of the completed application.

b. Any application for an installation permit or an operating permit that is determined to be complete prior to the effective date of these rules but for which no permit has been issued shall be considered complete for the purposes of this section. In issuing a permit pursuant to such an application, the Control Officer shall include in the permit all elements addressed in the application and a schedule of compliance for submitting an application for a permit revision to address the elements required to be in the permit that were not included in the operating permit application or in the installation permit application. No later than six months after the effective date of these rules, the Control Officer shall take final action on an operating permit application or on an installation permit application determined to be complete prior to the effective date of these rules.

314 ACCELERATED PERMITTING:

314.1 Notwithstanding any other provisions of these rules, the following qualify a source for a request-submittal for accelerated processing: an application for a Title V permit or for a Non-Title V permit; any permit revision; and any coverage under a general permit. Such a request-submittal shall be submitted in writing to the Control Officer at least 30 days in advance of filing the application and shall be accompanied by fees as described in Rule 280 of these rules.

314.2 When an applicant has requested accelerated permit processing, the Control Officer may, to the extent practicable, undertake to process the permit or permit revision in accordance with the following schedule:

a. For applications for initial Title V and Non-Title V permits under Rules 210 and 220 of these rules, for significant permit revisions under Rule 210 of these rules, or for non-minor permit revisions under Rule 220 of these rules, final action on the permit or on the permit revision shall be taken within 90 days or after the Control Officer determines that the application is complete for a Non-Title V source and within 120 days after the Control Officer determines that the application is complete for a Title V source. Except for a new major source or a major modification subject to the requirements of Rule 240 of these rules, an application for a new permit, a significant permit revision, or a permit renewal shall be deemed to be complete unless the Control Officer notifies the applicant by certified mail within 30 days of receipt of the application that the application is not complete.

b. For applications for coverage under a general permit under Rule 230 of these rules, final action shall be taken within 30 days after receipt of the application.

c. For minor permit revisions governed by Rule 210 of these rules and Rule 220 of these rules, the permit revision shall be issued within 60 days after receipt of the application.

314.3 Before issuing a permit or permit revision pursuant to this section, the applicant shall pay to the Control Officer all fees due as described in Rule 280 of these rules. Nothing in this section shall affect the public participation requirements of Rules 210 or 220 of these rules, or EPA and affected state review as required under Rule 210 of these rules.

SECTION 400 – ADMINISTRATIVE REQUIREMENTS

401 APPROVAL OR DENIAL OF PERMIT OR PERMIT REVISION:

401.1 The Control Officer shall deny a permit or revision if the applicant does not demonstrate that every such source for which a permit or permit revision is sought is so designed, controlled, or equipped with such air pollution control equipment that the source may be expected to operate without emitting or without causing to be emitted air contaminants in violation of the provisions of these rules.

401.2 Prior to acting on an application for a permit, the Control Officer may require the applicant to provide and to maintain such devices and procedures as are necessary for sampling and for testing purposes in order to secure information that will disclose the nature, extent, quantity, or degree of air contaminants discharged into the atmosphere from the source described in the application. In the event of such a requirement, the Control Officer shall notify the applicant in writing of the type and characteristics of such devices and procedures.

401.3 In acting upon an application for a permit renewal, if the Control Officer finds that such source has not been constructed in accordance with any prior permit or revision issued pursuant to A.R.S. § 49-480.01, the Control Officer shall require the permittee to obtain a permit revision or shall deny the permit renewal. The Control Officer shall not accept any further application for a permit for such source so constructed until the Control Officer finds that such source has been reconstructed in accordance with a prior permit or a revision, or until a revision to the permit has been obtained. The Control Officer may issue a permit with a compliance schedule for a source that is not in compliance with all applicable requirements at the time of permit issuance.

401.4 After a decision on a permit or on a permit revision, the Control Officer shall notify the applicant and any person who filed a comment on the permit pursuant to A.R.S. § 49-480 or on the permit revision pursuant to A.R.S. § 49-480.01 in writing of the decision, and if the permit is denied, the reasons for such denial. Service of this notification may be made in person or by first class mail. The Control Officer shall not accept a further application unless the applicant has corrected the circumstances giving rise to the objections as specified by the Control Officer as reasons for such denial.

402 PERMIT REOPENINGS; REVOCATION AND REISSUANCE; TERMINATION:

402.1 Reopening for Cause:

a. Each issued permit shall include provisions specifying the conditions under which the permit will be reopened prior to the expiration of the permit. A permit shall be reopened and revised under any of the following circumstances:

(1) Additional applicable requirements under the Act become applicable to a major source with a remaining permit term of three or more years. Such a reopening shall be completed not later than 18 months after promulgation of the applicable requirement. No such reopening is required if the effective date of the requirement is later than the date on which the permit is due to expire, unless the original permit or any of its terms and conditions has been extended pursuant to Section 403.2 of this rule. Any permit revision required pursuant to this rule shall comply with Section 403 of this rule for a permit renewal and shall reset the five year permit term.

(2) Additional requirements, including excess emissions requirements, become applicable to an affected source under the Acid Rain Program. Upon approval by the Administrator, excess emissions offset plans shall be deemed to be incorporated into the Title V permit.

(3) The Control Officer or the Administrator determines that the permit contains a material mistake or that inaccurate statements were made in establishing the emissions standards or other terms or conditions of the permit.

(4) The Control Officer or the Administrator determines that the permit must be revised or revoked to assure compliance with the applicable requirements.

b. Proceedings to reopen and issue a permit, including appeal of any final action relating to a permit reopening, shall follow the same procedures as apply to initial permit issuance and shall, except for reopenings under Section 402.1a(1) of this rule, affect only those parts of the permit for which cause to reopen exists. Such reopening shall be made as expeditiously as is practicable.

c. Action to reopen a permit under this section shall not be initiated before a notice of such intent is provided to the source by the Control Officer at least 30 days in advance of the date that the permit is to be reopened, except that the Control Officer may provide a shorter time period in the case of an emergency.

d. When a permit is reopened and revised pursuant to this rule, the Control Officer may make appropriate revisions to the permit shield established pursuant to Rule 210 of these rules.

402.2 Reopening for Cause by the Administrator:

a. If the Administrator finds that cause exists to terminate, modify, or revoke and reissue a permit pursuant to Section 402.1 of this rule, the Administrator may notify the Control Officer and the permittee of such finding in writing. Within ten days of receipt of notice from the Administrator that cause exists to reopen a Title V permit, the Control Officer shall notify the source.

b. Within 90 days of receipt of notice from the Administrator that cause exists to reopen a permit, the Control Officer shall forward to the Administrator a proposed determination of termination, modification, or revocation and reissuance of the permit. The Control Officer may request a 90-day extension of this limit if it is necessary to request a new or revised permit application or additional information from the applicant for, or holder of, a Title V permit.

c. The Control Officer shall have 90 days from receipt of an objection by the Administrator to attempt to resolve the objection.

403 PERMIT RENEWAL AND EXPIRATION:

403.1 Prior to renewing a permit issued under these rules, the Control Officer shall provide notice in the same manner and form as provided in Rule 210 of these rules.

403.2 The Control Officer shall not renew a permit issued under these rules unless the permittee applies for a permit renewal prior to the expiration of a permit in the manner required by Rule 210 of these rules. If a timely and complete application for a permit renewal is submitted, but the Control Officer has failed to issue or deny the renewal permit before the end of the term of the previous permit, then the permit shall not expire until the renewal permit has been issued or denied. Any testing that is required for a renewal shall be completed before the proposed permit renewal is issued by the Control Officer.

403.3 The Control Officer shall publish notice of a permit renewal decision in the same manner as that provided in Rule 210 of these rules for a Title V permit and as that provided in Rule 220 of these rules for a Non-Title V permit.

404 PERMIT TRANSFERS:

404.1 Except as provided in A.R.S. § 49-429 and Section 404.2 of this rule, a Title V permit, a Non-Title V permit, or a General permit may be transferred to another person. Before the proposed transfer, the person who holds a valid Non-Title V

permit or a valid General permit shall comply with the administrative permit revision procedures pursuant to Rule 220, Section 405.1 of these rules. At least 30 days before the proposed transfer, the person who holds a valid Title V permit shall give notice to the Control Officer in writing and shall comply with the administrative permit amendment procedures pursuant to Rule 210, Section 404 of these rules. Permit transfer notice shall contain the following:

a. The permit number and expiration date.

b. The name, address and telephone number of the current permit holder.

c. The name, address and telephone number of the person to receive the permit.

d. The name and title of the individual within the organization who is accepting responsibility for the permit along with a signed statement by that person indicating such acceptance.

e. A description of the equipment to be transferred.

f. A written agreement containing a specific date for transfer of permit responsibility, coverage, and liability between the current and new permittee.

g. Provisions for the payment of any fees pursuant to Rule 280 of these rules that will be due and payable before the effective date of transfer.

h. Sufficient information about the source's technical and financial capabilities of operating the source to allow the Control Officer to make the decision in Section 404.2 of this rule including:

(1) The qualifications of each person principally responsible for the operation of the source.

(2) A statement by the chief financial officer of the new permittee that it is financially capable of operating the source in compliance with the law, and the information that provides the basis for that statement.

(3) A brief description of any action for the enforcement of any federal or state law, rule or regulation, or any county, city or local government ordinance relating to the protection of the environment, instituted against any person employed by the new permittee and principally responsible for operating the source during the five years preceding the date of application. In lieu of this description, the new permittee may submit a copy of the certificate of disclosure or 10-K form required under A.R.S. § 49-109, or a statement that this information has been filed in compliance with A.R.S. § 49-109.

404.2 The Control Officer shall deny the transfer if the Control Officer determines that the organization receiving the permit is not capable of operating the source in compliance with Article 3, Chapter 3, Title 49, Arizona Revised Statutes, the provisions of these rules, or the provisions of the permit. Notice of the denial stating the reason for the denial shall be sent to the original permit holder by certified mail stating the reason for the denial within ten working days of the Control Officer's receipt of the application. If the transfer is not denied within ten working days after receipt of the notice, the Control Officer shall approve such permit transfer.

404.3 To appeal the transfer denial:

a. Both the transferor and transferee shall petition the hearing board in writing for a public hearing; and

b. The appeal process for a permit shall be followed.

405 PERMITS CONTAINING THE TERMS AND CONDITIONS OF FEDERAL DELAYED COMPLIANCE ORDERS (DCO) OR CONSENT DECREES:

405.1 The terms and conditions of either a DCO or consent decree shall be incorporated into a permit through a permit revision. In the event the permit expires prior to the expiration of the DCO or consent decree, the DCO or consent decree shall be incorporated into any permit renewal.

405.2 The owner or operator of a source subject to a DCO or consent decree shall submit to the Control Officer a quarterly report of the status of the source and construction progress and copies of any reports to the Administrator required under the order or decree. The Control Officer may require additional reporting requirements and conditions in permits issued under this rule.

405.3 For the purpose of this rule, sources subject to a consent decree issued by a federal court shall meet the same requirements as those subject to a DCO.

406 APPEAL: Denial or revocation of a permit shall be stayed by the permittee's written petition for a hearing, filed in accordance with Rule 400 of these rules.

407 AIR QUALITY IMPACT MODELS:

407.1 Where the Control Officer requires a person to perform air quality impact modeling, the modeling shall be performed in a manner consistent with 40 CFR 51, Appendix W, “Guideline On Air Quality Models”, as of July 1, 2004 (and no future amendments or additions), which shall be referred to hereinafter as "Guideline", and is adopted by reference.

407.2 **Model Substitution:** Where the person can demonstrate that an air quality impact model specified in the guideline is inappropriate, the model may be modified or another model substituted. However, before such modification or substitution can occur, the Control Officer must make a written finding that:

a. No model in the guideline is appropriate; or

b. The data base required for the appropriate model in the guideline is not available; and

c. A model proposed as a substitute or modification is likely to produce results equal or superior to those obtained by models in the guideline.

408 **TESTING PROCEDURES:** Except as otherwise specified, the applicable testing procedures contained in the Arizona Testing Manual for Air Pollutant Emissions shall be used to determine compliance with standards or permit conditions established pursuant to these rules.

409 **PERMIT FEES:** A fee shall be charged for each facility. No permit is valid until the applicable permit fee has been received and until the permit is issued by the Control Officer.

410 **PORTABLE SOURCES:**

410.1 An owner or operator of a portable source which will operate for the duration of its permit solely in Maricopa County shall obtain a permit from the Control Officer for Maricopa County and is subject to Sections 410.2, 410.3, and 410.4 of this rule. A portable source with a current State of Arizona permit need not obtain a Maricopa County permit but is subject to Sections 410.3, 410.4, and 410.5 of this rule. Any permit for a portable source shall contain conditions that will assure compliance with all applicable requirements at all authorized locations.

410.2 An owner or operator of a portable source which has a Maricopa County permit but proposes to operate outside of Maricopa County, shall obtain a permit from the Director. Upon issuance of a permit by the Director, the Control Officer shall terminate the Maricopa County permit for that source. If the owner or operator relocates the portable source in Maricopa County, the owner or operator shall notify the Control Officer as required by Section 410.4 of this rule of the relocation of the portable source. Whenever the owner or operator of a portable source operates a portable source in Maricopa County, such owner or operator shall comply with all regulatory requirements in these rules.

410.3 An owner of a portable source which requires a permit under this rule, shall obtain the permit prior to renting or leasing said portable source. This permit shall be provided by the owner to the renter or lessee, and the renter or lessee shall be bound by the permit provisions. In the event a copy of the permit is not provided

to the renter or lessee, both the owner and the renter or lessee shall be responsible for the operation of the portable source in compliance with the permit conditions and any violations thereof.

410.4 A portable source may be transported from one location to another within or across Maricopa County boundaries provided the owner or operator of such portable source notifies the Director and any Control Officer who has jurisdiction over the geographic area that includes the new location of the portable source by certified mail at least ten working days before the portable source is transported to the new location. The notification required under this rule shall include:

a. A description of the portable source to be transported including the Maricopa County permit number or the State of Arizona permit number for such portable source;

b. A description of the present location;

c. A description of the location to which the portable source is to be transported, including the availability of all utilities, such as water and electricity, necessary for the proper operation of all control equipment;

d. The date on which the portable source is to be moved;

e. The date on which operation of the portable source will begin at the new location; and

f. The duration of operation at the new location.

410.5 An owner or operator of a portable source with a current State of Arizona permit that moves such portable source into Maricopa County shall notify the Control Officer that such portable source is being transported to a new location and shall include in such notification a copy of the State of Arizona permit and a copy of any conditions imposed by the State of Arizona permit. The source shall be subject to all regulatory requirements of these rules.

411 PUBLIC RECORDS; CONFIDENTIALITY:

411.1 The Control Officer shall make all permits, including all elements required to be in the permit pursuant to Rule 210 of these rules and Rule 220 of these rules available to the public.

411.2 A notice of confidentiality pursuant to A.R.S. § 49-487(c) shall:

a. Precisely identify the information in the application documents, which is considered confidential.

b. Contain sufficient supporting information to allow the Control Officer to evaluate whether such information satisfies the requirements related to trade secrets or, if applicable, how the information, if disclosed, could cause substantial harm to the person's competitive position.

411.3 Within 30 days of receipt of a notice of confidentiality that complies with Section 411.2 of this rule, the Control Officer shall make a determination as to whether the information satisfies the requirements for trade secret or competitive position pursuant to A.R.S. § 49-487(C)(1) and so notify the applicant in writing. If the Control Officer agrees with the applicant that the information covered by the notice of confidentiality satisfies the statutory requirements, the Control Officer shall include a notice in the administrative record of the permit application that certain information has been considered confidential.

SECTION 500 – MONITORING AND RECORDS (NOT APPLICABLE)

REGULATION II - PERMITS AND FEES
RULE 201
EMISSIONS CAPS

INDEX

SECTION 100 - GENERAL

101 PURPOSE

102 APPLICABILITY

SECTION 200 - DEFINITIONS (NOT APPLICABLE)

SEE RULE 100 (GENERAL PROVISIONS AND DEFINITIONS) OF THESE RULES FOR DEFINITIONS OF TERMS THAT ARE USED BUT NOT SPECIFICALLY DEFINED IN THIS RULE

SECTION 300 - STANDARDS

301 EMISSIONS CAPS

302 ESTABLISHMENT OF AN EMISSIONS CAP

303 LIMITS OF A SOURCEWIDE EMISSIONS CAP

SECTION 400 - ADMINISTRATIVE REQUIREMENTS (NOT APPLICABLE)

SECTION 500 - MONITORING AND RECORDS (NOT APPLICABLE)

Adopted 07/26/00

MARICOPA COUNTY
AIR POLLUTION CONTROL REGULATIONS
REGULATION II - PERMITS AND FEES

RULE 201
EMISSIONS CAPS

SECTION 100 - GENERAL

101 PURPOSE: To increase operating flexibility for Title V sources and for Non-Title V sources.

102 APPLICABILITY: Unless otherwise noted, Rule 201 applies to each source with a Title V permit or with a Non-Title V permit.

SECTION 200 - DEFINITIONS (NOT APPLICABLE)

See Rule 100 (General Provisions And Definitions) of these rules for definitions of terms that are used but not specifically defined in this rule.

SECTION 300 - STANDARDS

301 EMISSIONS CAPS: An applicant, in its application for a new permit, a renewal of an existing permit, a non-minor permit revision (for a Non-Title V source), or a significant permit revision (for a Title V source), may request an emissions cap for a particular pollutant, expressed in tons per year as determined on a 12-month rolling average or any shorter averaging time necessary to enforce any applicable requirement, for any emissions unit, combination of emissions units, or an entire source to allow operating flexibility, including emissions trading for the purpose of complying with the emissions cap. This rule shall not apply to sources that hold an authority to operate under a General Permit, under Rule 230 of these rules.

302 ESTABLISHMENT OF AN EMISSIONS CAP:

302.1 In order to incorporate an emissions cap in a permit, the applicant must demonstrate to the Control Officer that terms and conditions in the permit will:

a. Ensure compliance with all applicable requirements for the pollutant;

b. Contain replicable procedures to ensure that the emissions cap is enforceable as a practical matter and emissions trading conducted under the emissions cap is quantifiable and enforceable as a practical matter. For the purposes of this rule, "enforceable as a practical matter" shall include the following criteria:

(1) The permit conditions are permanent and quantifiable;

(2) The permit includes a legally enforceable obligation to comply;

(3) The permit limits impose an objective and quantifiable operational or production limit or require the use of in-place air pollution control equipment;

(4) The permit limits have short-term averaging times consistent with the averaging times of the applicable requirement;

(5) The permit conditions are enforceable and are independent of any other applicable limitations; and

(6) The permit conditions for monitoring, recordkeeping, and reporting requirements are sufficient to comply with Rule 220, subsections 302.3, 302.4, 302.5, 302.6, and 302.7 of these rules.

c. For a Title V permit, include all terms required under Rule 210, subsection 302.1 of these rules and Rule 210, Section 305 of these rules.

302.2 Title V sources shall log an increase or decrease in actual emissions authorized as a trade under an emissions cap, unless an applicable requirement requires notice to the Control Officer. The log shall contain the information required by the permit, including, at a minimum, when the proposed emissions increase or decrease occurred, a description of the physical change or change in method of operation that produced the increase or decrease, the change in emissions from the physical change or change in method of operation, and how the increase or decrease in emissions complies with the permit. Non-Title V sources shall comply with Rule 220, subsection 404.2(e) of these rules.

302.3 The Control Officer shall not include, in an emissions cap or emissions trading allowed under the emissions cap, any emissions unit for which the emissions are not quantifiable or for which there are no replicable procedures or practical means to enforce emissions trades.

303 **LIMITS OF A SOURCEWIDE EMISSIONS CAP:** An emissions cap for a Non-Title V source that limits the emissions of a particular pollutant for the entire source shall not exceed any of the following:

303.1 The applicable requirement for the pollutant if expressed in tons per year;

303.2 The source's actual emissions plus the applicable significance level for the pollutant established in Rule 100 of these rules;

303.3 The applicable major source threshold for the pollutant; or

303.4 A sourcewide emission limitation for the pollutant voluntarily agreed to by the source under Rule 220, Section 304 of these rules.

SECTION 400 - ADMINISTRATIVE REQUIREMENTS (NOT APPLICABLE)

SECTION 500 - MONITORING AND RECORDS (NOT APPLICABLE)

REGULATION II - PERMITS AND FEES

RULE 204
EMISSION REDUCTION CREDITS FOR USE WITH THE ARIZONA EMISSIONS BANK

INDEX

SECTION 100 - GENERAL

101 PURPOSE

102 APPLICABILITY

SECTION 200 - DEFINITIONS

201 CERTIFIED CREDIT

202 CREDIT UTILIZATION

203 EMISSION REDUCTION CREDIT

204 EMISSIONS BANK

205 SURPLUS

SECTION 300 - STANDARDS

301 CREDIT CERTIFICATION

302 CREDIT UTILIZATION

SECTION 400 - ADMINISTRATIVE REQUIREMENTS (NOT APPLICABLE)

SECTION 500 - MONITORING AND RECORDS (NOT APPLICABLE)

Adopted 05/07/03

MARICOPA COUNTY
AIR POLLUTION CONTROL REGULATIONS

REGULATION II - PERMITS AND FEES

RULE 204
EMISSION REDUCTION CREDITS FOR USE WITH THE ARIZONA EMISSIONS BANK

SECTION 100 – GENERAL

101 PURPOSE: To implement procedures for certification and utilization of emission reduction credits for use with the Arizona Emissions Bank.

102 APPLICABILITY: Participation in the Rule 204 emission reduction credit certification and utilization program is voluntary. The provisions of this rule apply to permitted sources emitting particulate matter, sulfur dioxide, carbon monoxide, nitrogen oxides, or volatile organic compounds. Rule 204 does not apply to sources granted the authority to operate under Rule 230 (General Permits) of these rules.

SECTION 200 – DEFINITIONS: For the purpose of this rule, the following definitions shall apply. See Rule 100 (General Provisions and Definitions) of these rules for definitions of terms that are used but not specifically defined in this rule.

201 CERTIFIED CREDITS – emission reduction credits that have qualified for certification by satisfying the criteria established for emission reduction as outlined in Section 301 (Credit Certification) of this rule.

202 CREDIT UTILIZATION – the use of a certified emission reduction credit.

203 EMISSION REDUCTION CREDIT or **CREDIT** – a certified unit that may be banked, sold, transferred, withdrawn or retired.

204 EMISSIONS BANK – the electronic entity where emission reduction credits are recorded for the purpose of the public notice, allowing a person to determine the availability of credits for related market transactions. The emissions bank is administered by the Arizona Department of Environmental Quality.

205 SURPLUS – the amount of a permitted source's emission reduction that is not required by federal, state, or local law.

SECTION 300 – STANDARDS

301 CREDIT CERTIFICATION

301.1 The Control Officer may certify an emission credit if the Control Officer verifies the credit is based on all of the following:

(a) A reduction in actual emissions that occurred after August 17, 1999;

(b) A quantifiable reduction in actual emissions;

(c) A permanent reduction in actual emissions;

(d) An enforceable reduction in actual emissions; and

(e) A surplus reduction in actual emissions occurring in addition to any other required emission reduction.

301.2 The source must notify the Control Officer when the reduction occurs.

301.3 In order for the emission reduction to be quantifiable under this section:

(a) The emission reduction must be quantifiable under Rule 100, § 200.86; and

(b) The reducing source shall submit documentation of any testing or monitoring that demonstrates an emission reduction.

301.4 The Control Officer shall certify one emission reduction credit for each ton per year of particulate matter, sulfur dioxide, carbon monoxide, nitrogen dioxide, or volatile organic compound actually reduced.

301.5 The Control Officer shall notify the source and the Director of the ADEQ that a credit is certified.

302 CREDIT UTILIZATION

302.1 A source may use a certified emission reduction credit in the same nonattainment area, maintenance area, or modeling domain in which the emission reduction occurred by submitting a Credit Utilization Application (CUA) to both the Director of the ADEQ and the Control Officer, on a form prescribed by the Director of the ADEQ. The source shall submit the CUA to the Control Officer at

the time the source submits an application for a permit or permit revision.

302.2 Before any emission reduction credits may be utilized, the Control Officer shall:

(a) Evaluate and verify the authenticity of the credit, and

(b) Determine that there will be no adverse impact on the air quality.

302.3 After the Control Officer completes the permitting action, the Control Officer shall submit the credit certificate to the Director of the ADEQ and notify the Director that the requirements of A.A.C. R18-2-1206 have been met.

SECTION 400 - ADMINISTRATIVE REQUIREMENTS (NOT APPLICABLE)

SECTION 500 - MONITORING AND RECORDS (NOT APPLICABLE)

REGULATION II - PERMITS AND FEES

RULE 210

TITLE V PERMIT PROVISIONS

INDEX

SECTION 100 - GENERAL

101 PURPOSE

102 APPLICABILITY

SECTION 200 - DEFINITIONS

201 EMISSIONS ALLOWABLE UNDER THE PERMIT

SECTION 300 - STANDARDS

301 PERMIT APPLICATION PROCESSING PROCEDURES

302 PERMIT CONTENTS

303 PERMIT REVIEW BY THE ENVIRONMENTAL PROTECTION AGENCY (EPA) AND AFFECTED STATES

304 EMISSION STANDARDS AND LIMITATIONS

305 COMPLIANCE PLAN; CERTIFICATION

SECTION 400 - ADMINISTRATIVE REQUIREMENTS

401 FEES REQUIRED

402 PERMIT TERM

403 SOURCE CHANGES ALLOWED WITHOUT PERMIT REVISIONS

404 ADMINISTRATIVE PERMIT AMENDMENTS

405 MINOR PERMIT REVISIONS

406 SIGNIFICANT PERMIT REVISIONS

407 PERMIT SHIELDS

408 PUBLIC PARTICIPATION

SECTION 500 - MONITORING AND RECORDS (NOT APPLICABLE)

Revised 07/13/88
Repealed and Adopted 11/15/93
Revised 02/15/95
Revised 06/19/96
Revised 05/20/98
Revised 02/07/01
Revised 05/07/03
Revised 06/06/07

MARICOPA COUNTY
AIR POLLUTION CONTROL REGULATIONS
REGULATION II - PERMITS AND FEES
RULE 210
TITLE V PERMIT PROVISIONS

SECTION 100 - GENERAL

101 PURPOSE: To provide an orderly procedure for the review of new Title V sources of air pollution and of the modification and operation of existing Title V sources through the issuance of Title V permits.

102 APPLICABILITY: Unless otherwise noted, this rule applies to each source requiring a Title V permit or permit revision.

SECTION 200 - DEFINITIONS: See Rule 100-General Provisions And Definitions of these rules for definitions of terms that are used but not specifically defined in this rule. For the purpose of this rule, the following definition shall apply:

201 EMISSIONS ALLOWABLE UNDER THE PERMIT - An enforceable permit term or condition determined at issuance to be required by an applicable requirement that establishes an emissions limit (including a work practice standard) or an enforceable emissions cap that the source has assumed to avoid an applicable requirement to which the source would otherwise be subject.

SECTION 300 - STANDARDS

301 PERMIT APPLICATION PROCESSING PROCEDURES:

301.1 Standard Application Form And Required Information: To apply for any permit under this rule, applicants shall complete the "Standard Permit Application Form" and shall supply all information required by the "Filing Instructions" as shown in Appendix B of these rules.

301.2 Unless otherwise required by Rule 200-Permit Requirements of these rules, a timely application is:

a. For purposes of permit renewal, a timely application is one that is submitted at least six months, but not more than 18 months, prior to the date of permit expiration.

b. For the initial Phase II acid rain requirement under Rule 371-Acid Rain of these rules of a Title V permit, one that is submitted to the Control Officer by January 1, 1996, for sulfur dioxide, and by January 1, 1998, for nitrogen oxides.

c. Any existing source which becomes subject to a standard promulgated by the Administrator under Section 112(d) of the Act shall, within 12 months of the date on which the standard is promulgated, submit an application for a permit revision demonstrating how the source will comply with the standard.

301.3 If, at the time an application for a permit required by these rules is submitted, an applicable implementation plan allows the determination of an alternate emission limit, a source may, in its application, propose an emission limit that is equivalent to the emission limit otherwise applicable to the source under the applicable implementation plan. The source shall also demonstrate that the equivalent limit is quantifiable, accountable, enforceable, and subject to replicable compliance determination procedures.

301.4 A complete application is one that satisfies all of the following:

a. To be complete, an application shall provide all information required by Section 301.1-Standard Application Form And Required Information of this rule. An application for permit revision only need supply information related to the proposed change, unless the source's proposed permit revision will change the permit from a Non-Title V Permit to a Title V Permit. A responsible official shall certify the submitted information consistent with Section 301.7-Certification Of Truth, Accuracy, And Completeness of this rule.

b. An application for a new permit or permit revision shall contain an assessment of the applicability of the requirements of Rule 240-Permit Requirements For New Major Sources And Major Modifications To Existing Major Sources and Rule 241-Permits For New Sources And Modifications To Existing Sources of these rules. If the proposed new source is a major source, as defined in Rule 240-Permit Requirements For New Major Sources And Major Modifications To Existing Major Sources of these rules, or the proposed permit revision constitutes a major modification as defined in Rule 100-General Provisions And Definitions of these

rules, then the application shall comply with all applicable requirements of Rule 240-Permit Requirements For New Major Sources And Major Modifications To Existing Major Sources of these rules.

c. An application for a new permit or permit revision shall contain an assessment of the applicability of the requirements established under Rule 372-Maricopa County Hazardous Air Pollutants (HAPs) Program of these rules. If the proposed new source permit or permit revision is subject to the requirements of Rule 372-Maricopa County Hazardous Air Pollutants (HAPs) Program of these rules, the application shall comply with all applicable requirements of Rule 372-Maricopa County Hazardous Air Pollutants (HAPs) Program of these rules.

d. An application to construct or reconstruct any major source of hazardous air pollutants shall contain a determination that maximum achievable control technology (MACT) for new sources under Section 112 of the Act will be met. Where MACT has not been established by the Administrator, such determination shall be made on a case-by-case basis under 40 C.F.R. 63.40 through 63.44, as incorporated by reference in Rule 370-Federal Hazardous Air Pollutant Program of these rules. For purposes of this section of this rule, constructing or reconstructing a major source shall have the meaning prescribed in 40 C.F.R. 63.41, as incorporated by reference in Rule 370-Federal Hazardous Air Pollutant Program of these rules.

e. An application for a new permit, a permit revision, or a permit renewal shall be deemed to be complete, unless the Control Officer notifies the applicant by certified mail within 60 days of receipt of the application that the application is not complete. For a proposed new major source or a major modification subject to the requirements of Rule 240-Permit Requirements For New Major Sources And Major Modifications To Existing Major Sources of these rules, the permit application shall be deemed to be submitted on the date that the completeness determination is made under Rule 240-Permit Requirements For New Major Sources And Major Modifications To Existing Major Sources of these rules.

f. If, while processing an application that has been determined or deemed to be complete, the Control Officer determines that additional information is necessary to evaluate or to take final action on that application, the Control Officer may request such information in writing and may set a reasonable deadline for a response. Except for minor permit revisions as set forth in Section 405 of this rule, a source's ability to continue operating without a permit, as set forth in this rule, shall be in effect from the date the

application is determined to be complete until the final permit is issued, provided that the applicant submits any requested additional information by the deadline specified by the Control Officer. The Control Officer may, after one submittal by the applicant under this rule, reject an application that is still determined to be incomplete and shall notify the applicant of the decision by certified mail.

g. The completeness determination shall not apply to revisions processed through the minor permit revision process.

h. To be complete, an application for a new permit or an application for a permit revision shall list and generally group activities, if applicable, which are insignificant as defined in Rule 100-General Provisions And Definitions of these rules and which are listed in Appendix D-List Of Insignificant Activities of these rules. The application need not provide emissions data regarding insignificant activities. If the Control Officer determines that an activity listed as insignificant does not meet the requirements of insignificant as defined in Rule 100-General Provisions And Definitions of these rules and as listed in Appendix D-List Of Insignificant Activities of these rules (i.e., if emissions estimates are needed for another purpose, such as determining the amount of permit fees), then the Control Officer shall notify the applicant in writing and shall specify additional information required.

i. If a permit applicant requests terms and conditions allowing for the trading of emission increases and decreases in the permitted source solely for the purpose of complying with a federally enforceable emission cap that is established in the permit independent of otherwise applicable requirements, the permit applicant shall include in its application proposed replicable procedures and permit terms that ensure the emissions trades are quantifiable and enforceable.

j. The Control Officer agrees with a notice of confidentiality submitted under A.R.S. §49-487.

301.5 A source that has submitted information with an application under a claim of confidentiality under A.R.S. §49-487 and Rule 200-Permit Requirements of these rules shall submit a copy of such information directly to the Administrator.

301.6 Duty To Supplement Or Correct Application: Any applicant who fails to submit any relevant facts or who has submitted incorrect information in a permit application shall, upon becoming aware of such failure or incorrect submittal, promptly submit such supplementary facts or corrected information. In addition, an applicant shall provide additional information

as necessary to address any requirements that become applicable to the source after the date it filed a complete application but prior to release of a proposed permit.

301.7 Certification Of Truth, Accuracy, And Completeness: Any application form, report, or compliance certification submitted under these rules shall contain certification by a responsible official of truth, accuracy, and completeness of the application as of the time of submittal. This certification and any other certification required under this rule shall state that, based on information and belief formed after reasonable inquiry, the statements and information in the document are true, accurate, and complete.

301.8 Action On Application:

a. The Control Officer may issue a permit with a compliance schedule for a source that is not in compliance with all applicable requirements at the time of permit issuance.

b. In addition, the Control Officer may issue, revise, or renew a permit only if all of the following conditions have been met:

(1) The permit application received must be complete according to Section 301.4 of this rule.

(2) Except for revisions qualifying as administrative or minor under Sections 404 and 405 of this rule, all of the requirements for public notice and participation under Section 408 of this rule must have been met.

(3) The Control Officer shall have complied with the requirements of Section 303 of this rule for notifying and responding to affected states and if applicable, other notification requirements of Rule 240, Section 304.2-Action On Application And Notification Requirements and Rule 240, Section 511.3(b)-Visibility Protection of these rules.

(4) The conditions of the permit shall require compliance with all applicable requirements.

(5) For permits for which an application is required to be submitted to the Administrator under Section 303.1 of this rule, and to which the Administrator has properly objected to its issuance in writing within 45 days of receipt of the proposed final permit and all necessary supporting information from the Department, the Control Officer has revised and submitted a proposed final permit in response

to the objection and the Administrator has not objected to this proposed final permit.

(6) For permits to which the Administrator has objected to issuance under a petition filed under 40 C.F.R. 70.8(d), the Administrator's objection has been resolved.

c. The Control Officer may issue a notice of revocation of a permit issued under this rule if:

(1) The Control Officer has reasonable cause to believe that the permit was obtained by fraud or misrepresentation.

(2) The person applying for the permit failed to disclose a material fact required by the permit application form or the regulation applicable to the permit, of which the applicant had or should have had knowledge at the time the application was submitted.

(3) The terms and conditions of the permit have been or are being violated and the violation has not been corrected within a reasonable period of time as specified by the Control Officer.

d. If the Control Officer issues a notice of denial or revocation of a permit under this rule, the notice shall be served on the applicant or permittee by certified mail, return receipt requested. The notice shall include a statement detailing the grounds for the denial or revocation and explaining that the permit applicant or permittee is entitled to a hearing under A.R.S. §49-482.

e. The Control Officer shall provide a statement that sets forth the legal and factual basis for the proposed permit conditions including references to the applicable statutory or regulatory provisions. The Control Officer shall send this statement to the Administrator and to any other person who requests it.

f. Except as provided in 40 C .F.R. 70.4(b)(11), Rule 200-Permit Requirements of these rules and Rule 240-Permit Requirements For New Major Sources And Major Modifications To Existing Major Sources of these rules, regulations promulgated under Title IV or Title V of the Act, or the permitting of affected sources under the acid rain program, the Control Officer shall take final action on each permit application (and request for revision or renewal) within 18 months after receiving a complete application.

g. Priority shall be given by the Control Officer to taking action on applications for construction or modification submitted under Title I, Parts C-Prevention Of Significant Deterioration and D-New Source Review of the Act.

h. A proposed permit decision shall be published within nine months of receipt of a complete application and any additional information requested under Section 301.4(e) of this rule to process the application. The Control Officer shall provide notice of the decision as provided in Section 408 of this rule and any public hearing shall be scheduled as expeditiously as possible.

301.9 Requirement For A Permit: Except as noted under the provisions in Sections 403 and 405 of this rule, no source may operate after the time that it is required to submit a timely and complete application, except in compliance with a permit issued under this rule. However, if a source submits a timely and complete application for permit issuance, revision, or renewal, the source's failure to have a permit is not a violation of these rules until the Control Officer takes final action on the application. This protection shall cease to apply if, subsequent to the completeness determination, the applicant fails to submit, by the deadline specified in writing by the Control Officer, any additional information identified as being needed to process the application. If a source submits a timely and complete application for a permit renewal, but the Control Officer has failed to issue or deny the renewal permit before the end of the term of the previous permit, then the permit shall not expire until the permit renewal has been issued or denied.

302 PERMIT CONTENTS:

302.1 Each permit issued under this rule shall include the following elements:

a. The date of issuance, the permit term, and the deadline by which the permittee must renew the permit.

b. Enforceable emission limitations and standards including those operational requirements and limitations that assures compliance with all applicable requirements at the time of issuance.

(1) The permit shall specify and reference the origin of and authority for each term or condition, and identify any difference in form as compared to the applicable requirement upon which the term or condition is based.

(2) The permit shall state that, where an applicable requirement of the Act is more stringent than an applicable requirement of regulations promulgated under Title IV of the Act and incorporated under Rule 371-Acid Rain of these rules, both provisions shall be incorporated into the permit and shall be enforceable by the Administrator.

(3) Any permit containing an equivalency demonstration for an alternative emission limit submitted under Section 301.3 of this rule shall contain provisions to ensure that any resulting emissions limit has been demonstrated to be quantifiable, accountable, enforceable, and based on replicable procedures.

(4) The permit shall specify applicable requirements for fugitive emission limitations, regardless of whether the source category in question is included in the list of sources contained in the definition of major source in Rule 100-General Provisions And Definitions of these rules.

c. As necessary, the following requirements with respect to monitoring:

(1) Requirements, including stipulated requirements, concerning the use, maintenance, and, where appropriate, installation of monitoring equipment or methods;

(2) Where the applicable requirement does not require periodic testing or instrumental or non-instrumental monitoring (which may consist of recordkeeping designed to serve as monitoring), periodic monitoring sufficient to yield reliable data from the relevant time period that are representative of the source's compliance with the permit as reported under Section 302.1(d) of this rule. Such monitoring requirements shall ensure use of terms, test methods, units, averaging periods, and other statistical conventions consistent with the applicable requirement. Recordkeeping provisions may be sufficient to meet the requirements of this rule; and

(3) Any emissions monitoring and analysis procedures or test methods required under the applicable requirements, including any procedures and methods promulgated under Sections 114(a)(3) or 504(b) of the Act.

d. With respect to recordkeeping, the permit shall incorporate all applicable recordkeeping requirements and require, where applicable, the following:

(1) Records of required monitoring information that include the following:

(a) The date, place as defined in the permit, and time of sampling or measurements;

(b) The date(s) analyses were performed;

(c) The name of the company or entity that performed the analysis;

(d) The analytical techniques or methods used;

(e) The results of such analysis; and

(f) The operating conditions as existing at the time of sampling or measurement.

(2) Retention of records of all required monitoring data and support information for a period of at least five years from the date of the monitoring sample, measurement, report, or application. Support information includes all calibration and maintenance records and all original strip-chart recordings for continuous monitoring instrumentation, and copies of all reports required by the permit.

e. With respect to reporting, the permit shall incorporate all applicable reporting requirements and require the following:

(1) Submittal of reports of any required monitoring at least every six months. All instances of deviations from permit requirements shall be clearly identified in such reports. All required reports shall be certified by a responsible official consistent with Section 301.7 and Section 305.1(e) of this rule.

(2) Prompt reporting of deviations from permit requirements, including those attributable to upset conditions as defined in the permit, the probable cause of such deviations, and any corrective actions or preventive measures taken. The Control Officer shall define "prompt" in relation to the degree and type of deviation likely to occur and the applicable requirements.

f. A permit condition prohibiting emissions exceeding any allowances that the source lawfully holds under Title IV of the Act or the

regulations promulgated thereunder and incorporated under Rule 371-Acid Rain of these rules.

(1) No permit revision shall be required for increases in emissions that are authorized by allowances acquired under the acid rain program and incorporated under Rule 371-Acid Rain of these rules, provided that such increases do not require a permit revision under any other applicable requirement.

(2) No limit shall be placed on the number of allowances held by the source. The source may not, however, use allowances as a defense to non-compliance with any other applicable requirement.

(3) Any such allowance shall be accounted for according to the procedures established in regulations promulgated under Title IV of the Act.

(4) Any permit issued under the requirements of this rule and Title V of the Act to a unit subject to the provisions of Title IV of the Act and incorporated under Rule 371-Acid Rain of these rules shall include conditions prohibiting all of the following:

(a) Annual emissions of sulfur dioxide in excess of the number of allowances to emit sulfur dioxide held by the owners or operators of the unit or the designated representative of the owners or operators.

(b) Exceedances of applicable emission rates.

(c) The use of any allowance prior to the year for which it was allocated.

(d) Violation of any other provision of the permit.

g. A severability clause to ensure the continued validity of the various permit requirements in the event of a challenge to any portions of the permit.

h. Provisions stating the following:

(1) That the permittee shall comply with all conditions of the permit including all applicable requirements of Arizona air quality statutes and the air quality rules. Compliance with permit terms and conditions does not relieve, modify, or otherwise affect the permittee's duty to comply with all applicable requirements of Arizona air quality statutes and the Maricopa County Air Pollution Control Regulations. Any permit non-compliance is grounds for enforcement action; for a permit termination, revocation and reissuance, or revision; or for denial of a permit renewal application. Non-compliance with any federally enforceable requirement in a permit constitutes a violation of the Act.

(2) That the permittee shall halt or reduce the permitted activity in order to maintain compliance with applicable requirements of Federal laws, Arizona laws, these rules, or other conditions of the permit.

(3) That the permit may be revised, reopened, revoked and reissued, or terminated for cause. The filing of a request by a permittee for a permit revision, revocation and reissuance, or termination, or of a notification of planned changes or anticipated noncompliance does not stay any permit condition.

(4) That the permit does not convey any property rights nor exclusive privilege, of any sort.

(5) That the permittee shall furnish to the Control Officer, within a reasonable time, any information that the Control Officer may request in writing to determine whether cause exists for revising, revoking and reissuing the permit, or terminating the permit, or to determine compliance with the permit. Upon request, the permittee shall also furnish to the Control Officer copies of records required to be kept by the permit. For information claimed to be confidential, the permittee shall furnish a copy of such records directly to the Administrator along with a claim of confidentiality.

(6) For any major source operating in a nonattainment area for any pollutant(s) for which the source is classified as a major source, the source shall comply with reasonably available control technology (RACT) as defined in Rule 100-General Provisions And Definitions of these rules.

(7) For any major source operating in a nonattainment area designated as serious for PM_{10}, for which the source is classified as a major source for PM_{10}, the source shall comply with the best available control technology (BACT), as defined in Rule 100-General Provisions And Definitions of these rules, for PM_{10}.

i. A provision to ensure that a source pays fees to the Control Officer under A.R.S. §49-480(D) and Rule 280-Fees of these rules.

j. A provision stating that no permit revision shall be required under any approved economic incentives, marketable permits, emissions trading and other similar programs or processes for changes that are provided for in the permit.

k. Terms and conditions for reasonably anticipated operating scenarios identified by the source in its application as approved by the Control Officer. Such terms and conditions:

(1) Shall require the source, contemporaneously with making a change from one operating scenario to another, to record in a log at the permitted source a record of the scenario under which it is operating;

(2) Shall extend the permit shield described in Section 407 of this rule to all terms and conditions under each such operating scenario; and

(3) Must ensure that the terms and conditions of each such alternative scenario meet all applicable requirements and the requirements of this rule.

l. Terms and conditions, if the permit applicant requests them, as approved by the Control Officer, for the trading of emissions increases and decreases in the permitted source, to the extent that the applicable requirements provide for trading increases and decreases without a case-by-case approval of each emissions trade. Such terms and conditions:

(1) Shall include all terms required under Section 302.1 and Section 302.3 of this rule to determine compliance;

(2) May extend the permit shield described in Section 302.4 of this rule to all terms and conditions that allow such increases and decreases in emissions; and

(3) Shall meet all applicable requirements and requirements of this rule.

m. Terms and conditions, if the permit applicant requests them and they are approved by the Control Officer, setting forth intermittent operating scenarios including potential periods of downtime. If such terms and conditions are included, the county's emissions inventory shall not reflect the zero emissions associated with the downtime.

n. If a permit applicant requests it, the Control Officer shall issue permits that contain terms and conditions allowing for the trading of emission increases and decreases in the permitted source solely for the purpose of complying with a federally enforceable emission cap that is established in the permit independent of otherwise applicable requirements. The permit applicant shall include in its application proposed replicable procedures and permit terms that ensure the emissions trades are quantifiable and enforceable. The Control Officer shall not be required to include in the emissions trading provisions any emissions units for which emissions are not quantifiable or for which there are no replicable procedures to enforce the emissions trades. The permit shall also require compliance with all applicable requirements. Changes made under this section of this rule shall not include modifications under any provision of Title I of the Act and may not exceed emissions allowable under the permit. The terms and conditions shall include notice that (1) conforms to Section 403.4 and Section 403.5 of this rule and (2) describes how the increases or decreases in emissions will comply with the terms and conditions of the permit.

o. Such terms and conditions as are consistent with the requirements of this rule, of Rule 100-General Provisions And Definitions of these rules and of the Clean Air Act and are found by the Control Officer to be necessary.

302.2 Federally Enforceable Requirements: All terms and conditions in a Title V Permit shall be enforceable by the Administrator and citizens under the Act, including any provisions designed to limit a source's potential to emit. However, the Control Officer shall specifically designate as not being federally enforceable under the Act any terms and conditions included in the Title V Permit that are not required under the Act or under any of its applicable requirements.

302.3 All applications for a permit required by this rule shall include a compliance plan meeting the requirements of Section 503 of the Act.

302.4 Each permit shall include the applicable permit shield provisions set forth in Section 407 of this rule.

302.5 A Title V permit issued to a major source shall require that revisions be made under Rule 200-Permit Requirements of these rules to incorporate additional applicable requirements adopted by the Administrator under the Act that become applicable to a source with a permit with a remaining permit term of three or more years. No revision shall be required if the effective date of the applicable requirements is after the expiration of the permit. The revisions shall be made as expeditiously as practicable, but not later than 18 months after the promulgation of such standards and regulations. Any permit revision required under this section of this rule shall comply with provisions in Rule 200-Permit Requirements of these rules for permit renewal and shall reset the five year permit term.

303 PERMIT REVIEW BY THE EPA AND AFFECTED STATES:

303.1 Except as provided in Section 301.5 of this rule and as waived by the Administrator, for each Title V permit, a copy of each of the following shall be provided to the Administrator as follows:

a. The applicant shall provide a complete copy of the application, including any attachments, compliance plans, and other information required by Section 301.4 of this rule at the time of submittal of the application to the Control Officer.

b. The Control Officer shall provide the proposed final permit after public and affected State review.

c. The Control Officer shall provide the final permit at the time of issuance.

303.2 The Control Officer may require the application information to be submitted in a computer-readable format compatible with the Administrator's national database management system.

303.3 The Control Officer shall keep all records associated with all permits including those records containing the calculations and rationale supporting the Control Officer's decision to issue a permit for a minimum of five years from permit issuance.

303.4 No permit for which an application is required to be submitted to the Administrator under Section 303.1 of this rule shall be issued if the Administrator properly objects to its issuance in writing within 45 days of receipt of the proposed final permit from the Control Officer and all necessary supporting information.

303.5 Review By Affected States:

a. For each Title V permit, the Control Officer shall provide notice of each proposed permit to any affected State on or before the time that the Control Officer provides this notice to the public as required under Section 408 of this rule except to the extent Section 405 of this rule requires the timing of the notice to be different.

b. If the Control Officer refuses to accept a recommendation of any affected State submitted during the public or affected State review period, the Control Officer shall notify the Administrator and the affected State in writing. The notification shall include the Control Officer's reasons for not accepting any such recommendation and shall be provided to the Administrator as part of the submittal of the proposed final permit. The Control Officer shall not be required to accept recommendations that are not based on federal applicable requirements or requirements of state law.

303.6 Any person who petitions the Administrator under 40 C.F.R. 70.8(d) shall notify the Control Officer by certified mail of such petition as soon as possible, but in no case more than 10 days following such petition. Such notice shall include the grounds for objection and whether such objections were raised during the public comment period. A petition for review does not stay the effectiveness of a permit or its requirements if the permit was issued after the end of the 45-day administrative review period and prior to the Administrator's objection.

303.7 If the Control Officer has issued a permit prior to receipt of the Administrator's objection under this rule, and the Administrator indicates that a permit should be revised or revoked and reissued, the Control Officer shall respond consistent with Rule 200-Permit Requirements of these rules and may thereafter issue only a revised permit that satisfies the Administrator's objection. In any case, the source shall not be in violation of the requirement to have submitted a timely and complete application.

303.8 Prohibition On Default Issuance:

a. No Title V permit including a permit renewal or revision shall be issued until affected States and the Administrator have had an opportunity to review the proposed permit.

b. No permit or renewal shall be issued unless the Control Officer has acted on the application.

304 EMISSION STANDARDS AND LIMITATIONS: Wherever applicable requirements apply different standards or limitations to a source for the same item, all applicable requirements shall be included in the permit.

305 COMPLIANCE PLAN; CERTIFICATION:

305.1 All permits shall contain the following elements with respect to compliance:

a. The following monitoring requirements sufficient to assure compliance with the terms and conditions of the permit:

(1) Any emissions monitoring and analysis procedures or test methods required under the applicable requirements, including any procedures and methods promulgated under Section 114(a)(3) or 504(b) of the Act;

(2) Where the applicable requirement does not require periodic testing or instrumental or non-instrumental monitoring (which may consist of recordkeeping designed to serve as monitoring), periodic monitoring sufficient to yield reliable data from the relevant time period that are representative of the source's compliance with the permit, as reported under Section 305.1(c) of this rule. Such monitoring requirements shall assure use of terms, test methods, units, averaging periods, and other statistical conventions consistent with the applicable requirements; and

(3) Requirements concerning the use, maintenance, and, where appropriate, installation of monitoring equipment or methods.

b. All applicable recordkeeping requirements, as described in Section 302.1(d) of this rule.

c. All applicable reporting requirements including the following:

(1) Submittal of reports of any required monitoring at least every six months. All instances of deviations from permit requirements shall be clearly identified in such reports. All required reports shall be certified by a responsible official consistent with Section 305.1(e) of this rule.

(2) Reporting within two working days from knowledge of deviations from permit requirements, including those attributable to upset conditions as defined in the permit and the probable cause of such deviations. Reporting within a reasonable time of any long-term corrective actions or preventative measures taken.

d. Requirements for compliance certification with terms and conditions contained in the permit, including emission limitations, standards, or work practices. Permits shall include each of the following:

(1) The frequency for submissions of compliance certifications, which shall not be less than annually;

(2) The means to monitor the compliance of the source with its emissions limitations, standards, and work practices;

(3) A requirement that the compliance certification include the following:

(a) The identification of each term or condition of the permit that is the basis of the certification;

(b) The compliance status;

(c) Whether compliance was continuous or intermittent;

(d) The method(s) used for determining the compliance status of the source, currently and over the reporting period; and

(e) Other facts the Control Officer may require to determine the compliance status of the source.

(4) A requirement that all compliance certifications be submitted to the Control Officer and to the Administrator;

(5) Additional requirements specified in Sections 114(a)(3) and 504(b) of the Act or under Rule 220-Non-Title V Permit Provisions, Section 304-Permits Containing Voluntarily Accepted Emissions Limitations, Controls, Or Other Requirements (Synthetic Minor) of these rules.

e. A requirement for any document required to be submitted by a permit, including reports, to contain a certification by a responsible official of truth, accuracy, and completeness. This certification and any other certification required under this rule shall state that, based on information and belief formed after reasonable inquiry, the statements and information in the document are true, accurate, and complete.

f. Inspection and entry provisions which require the permittee to allow the Control Officer, upon presentation of proper credentials, to:

(1) Enter upon the permittee's premises where a source is located or emissions-related activity is conducted, or where records are required to be kept under the conditions of the permit;

(2) Have access to and copy, at reasonable times, any records that are required to be kept under the conditions of the permit;

(3) Inspect, at reasonable times, any sources, equipment (including monitoring and air pollution control equipment), practices, or operations regulated or required under the permit;

(4) Sample or monitor, at reasonable times, substances or parameters for the purpose of assuring compliance with the permit or other applicable requirements; and

(5) To record any inspection by use of written, electronic, magnetic, and photographic media.

g. A compliance plan that contains all of the following:

(1) A description of the compliance status of the source with respect to all applicable requirements.

(2) A description as follows:

(a) For applicable requirements with which the source is in compliance, a s tatement that the source will continue to comply with such requirements.

(b) For applicable requirements that will become effective during the permit term, a statement that the source will meet such requirements on a timely basis.

(c) For requirements with which the source is not in compliance at the time of permit issuance, a narrative description of how the source will achieve compliance with such requirements.

(3) A compliance schedule as follows:

(a) For applicable requirements with which the source is in compliance, a s tatement that the source will continue to comply with such requirements.

(b) For applicable requirements that will become effective during the permit term, a statement that the source will meet such requirements on a timely basis. A statement that the source will meet in a timely manner applicable requirements that become effective during the permit term shall satisfy this rule, unless a more detailed schedule is expressly required by the applicable requirement.

(c) A schedule of compliance for sources that are not in compliance with all applicable requirements at the time of permit issuance. Such a schedule shall include a schedule of remedial measures, including an enforceable sequence of actions with milestones, leading to compliance with any applicable requirement for which the source will be in noncompliance at the time of permit issuance. This compliance schedule shall resemble and be at least as stringent as that contained in any judicial consent decree or administrative order to which the source is subject. Any such schedule of compliance shall be supplemental to, and shall not sanction noncompliance with, the applicable requirements on which it is based.

(4) A schedule for submission of certified progress reports no less frequently than every six months for sources required to have a schedule of compliance to remedy a violation. Such schedule shall contain:

(a) Dates for achieving the activities, milestones, or compliance required in the schedule of compliance, and dates when such activities, milestones or compliance were achieved; and

(b) An explanation of why any dates in the schedule of compliance were not or will not be met, and any preventive or corrective measures adopted.

(5) The compliance plan content requirements specified in Section 305.1(g) of this rule shall apply and be included in the acid rain portion of a compliance plan for an affected source, except as specifically superseded by regulations promulgated under Title IV of the Act and incorporated under Rule 371-Acid Rain of these rules with regard to the schedule and method(s) the source will use to achieve compliance with the acid rain emissions limitations.

h. If there is a Federal Implementation Plan (FIP) applicable to the source, a provision that compliance with the FIP is required.

SECTION 400 - ADMINISTRATIVE REQUIREMENTS

401 FEES REQUIRED: Persons subject to this rule shall pay the fees required, as set forth in Rule 280-Fees of these rules.

402 PERMIT TERM: A Title V Permit shall remain in effect for no more than five years.

403 SOURCE CHANGES ALLOWED WITHOUT PERMIT REVISIONS:

403.1 A source with a Title V permit may make changes without a permit revision if all of the following apply:

a. The changes are not modifications under any provision of Title I of the Act or under A.R.S. §49-401.01(24) or as defined in Rule 100-General Provisions And Definitions of these rules.

b. The changes do not result in emissions that exceed the emissions allowable under the permit whether expressed therein as a rate of emissions or in terms of total emissions.

c. The changes do not violate any applicable requirements or trigger any additional applicable requirements.

d. The changes meet all requirements for processing as a minor permit revision under Section 405 of this rule.

e. The changes do not violate federally enforceable permit terms and conditions that are monitoring (including test methods), recordkeeping, reporting, or compliance certification requirements.

403.2 The substitution of an item of process or pollution control equipment for an identical or substantially similar item of process or pollution control equipment shall qualify as a change that does not require a permit revision, if it meets all of the requirements of Sections 403.1, 403.4, and 403.5 of this rule.

403.3 Except for sources with authority to operate under general permits, permitted sources may trade increases and decreases in emissions within the permitted source, as established in the permit under Section 302.1(l) of this rule, where an applicable implementation plan provides for such emissions trades, without applying for a permit revision and based on the seven working days notice prescribed in Section 403.4 of this rule. This provision is available in those cases where the permit does not already provide for such emissions trading, and shall not include any emissions units for which emissions are not quantifiable nor for which there are no replicable procedures to enforce the emissions trades.

403.4 For each such change under Sections 403.1 and 403.3 of this rule, a written notice either by hand delivery or by certified mail shall be received by the Control Officer and the Administrator, a minimum of seven working days in advance of the change. Notifications of changes associated with emergency conditions, such as malfunctions necessitating the replacement of equipment, may be provided less than seven working days in advance of the change but must be provided as far in advance of the change, or if advance notification is not practicable, as soon after the change as possible.

403.5 Each notification shall include:

a. When the proposed change will occur.

b. A description of each such change.

c. Any change in emissions of regulated air pollutants.

d. The pollutants emitted subject to the emissions trade, if any.

e. The provisions in the implementation plan that provide for the emissions trade with which the source will comply and any other information as may be required by the provisions in the implementation plan authorizing the trade.

f. If the emissions trading provisions of the implementation plan are invoked, then the permit requirements with which the source will comply.

g. Any permit term or condition that is no longer applicable as a result of the change.

403.6 The permit shield described in Section 407 of this rule shall not apply to any change made under Section 403.1 through Section 403.3 of this rule. Compliance with the permit requirements that the source will meet using the emissions trade shall be determined according to requirements of the implementation plan authorizing the emissions trade.

403.7 Except as otherwise provided for in the permit, making a change from one alternative operating scenario to another, as provided in Section 302.1(k) of this rule, shall not require any prior notice under this rule.

403.8 Notwithstanding any other part of this rule, the Control Officer may require a permit to be revised for any change that, when considered together with any other changes submitted by the same source under this rule over the term of the permit, does not satisfy Section 403.1 of this rule.

403.9 The Control Officer shall make available to the public monthly summaries of all notices received under this rule.

404 ADMINISTRATIVE PERMIT AMENDMENTS:

404.1 Except for provisions to Title IV of the Act, an administrative permit amendment is a permit revision that does any of the following:

a. Corrects typographical errors;

b. Identifies a change in the name, address, or phone number of any person identified in the permit or provides a similar minor administrative change at the source;

c. Requires more frequent monitoring or reporting by the permittee; or

d. Allows for a change in ownership or operational control of a source under Rule 200-Permit Provisions of these rules, where the Control Officer determines that no other change in the permit is necessary, provided that a written agreement containing a specific date for transfer of permit responsibility coverage and liability between the current and new permittee has been submitted to the Control Officer.

404.2 Administrative permit amendments to Title IV provisions of the permit shall be governed by regulations promulgated by the Administrator under Title IV of the Act or incorporated under Rule 371-Acid Rain of these rules.

404.3 The Control Officer shall take no more than 60 days from receipt of a request for an administrative permit amendment to take final action on such request. Title V permits may incorporate such changes without

providing notice to the public or affected States provided that such permits designate that such permit revisions have been made under this rule.

404.4 The Control Officer shall submit a copy of Title V permits revised under this rule to the Administrator.

404.5 Source's Ability To Make A Change: Except for permit transfers described in Rule 200-Permit Provisions of these rules, the source may implement the changes addressed in the request for an administrative permit amendment immediately upon submittal of the request.

405 MINOR PERMIT REVISIONS:

405.1 Minor permit revision procedures may be used only for those changes at a Title V source that satisfy all of the following:

a. Do not violate any applicable requirement;

b. Do not involve substantive changes to existing monitoring, reporting, or recordkeeping requirements in the permit;

c. Do not require or change:

(1) A case-by-case determination of an emission limitation or other standard,

(2) A source specific determination of ambient impacts, or

(3) A visibility or increment analysis.

d. Do not seek to establish nor to change a Title V permit term or condition for which there is no corresponding underlying applicable requirement and that the Title V source has assumed in order to avoid an applicable requirement to which the Title V source would otherwise be subject. Such terms and conditions include:

(1) A federally enforceable emissions cap which the Title V source would assume to avoid classification as a modification under any provision of Title I of the Act; and

(2) An alternative emissions limit approved under regulations promulgated under the Section 112(i)(5) of the Act.

e. Are not modifications under any provision of Title I of the Act or Rule 372-Maricopa County Hazardous Air Pollutants (HAPs) Program of these rules.

f. Are not changes in fuels not represented in the permit application or provided for in the Title V permit.

g. The increase in the Title V source's potential to emit for any regulated air pollutant is not significant as defined in Rule 100-General Provisions And Definitions of these rules.

h. Are not required to be processed as a significant permit revision under Section 406 of this rule.

405.2 As approved by the Control Officer, minor permit revision procedures may be used for Title V permit revisions involving the use of economic incentives, marketable permits, emissions trading, and other similar approaches, to the extent that such minor permit revision procedures are explicitly provided for in an applicable implementation plan or in applicable requirements promulgated by the Administrator.

405.3 To request a minor permit revision, a source shall complete the "Standard Permit Application Form" and shall include the following information:

a. A description of the change, the emissions resulting from the change, and any new applicable requirements that will apply if the change occurs;

b. For any source that is making the change immediately after it files the application, the Title V source's suggested draft permit; and

c. Certification by a responsible official, that the proposed revision meets the criteria for use of minor permit revision procedures and a request that such procedures be used.

405.4 EPA And Affected State Notification: Within five working days of the Control Officer's receipt of an application for a minor permit revision, the Control Officer shall notify the Administrator and affected States of the requested permit revision in accordance with Section 303 of this rule.

405.5 The Control Officer shall not issue a final permit revision until after the Administrator's 45-day review period or until the Administrator has notified the Control Officer that the Administrator will not object to issuance of the permit revision, whichever is first. Although, the Control Officer may approve the permit revision prior to that time. Within 90 days of the Control Officer's receipt of an application under minor permit revision procedures, or 15 days after the end of the Administrator's 45-day review period, whichever is later, the Control Officer shall do one or more of the following:

a. Issue the permit revision as proposed;

b. Deny the permit revision application;

c. Determine that the proposed permit revision does not meet the minor permit revision criteria and should be reviewed under the significant permit revision procedures; and/or

d. Revise the proposed permit revision and transmit to the Administrator the new proposed permit revision as required in Section 303 of this rule.

405.6 **Source's Ability To Make Change:** The source may make the change proposed in its minor permit revision application immediately after it files the application. After the source makes the change allowed by the preceding sentence, and until the Control Officer takes any of the actions specified in Section 405.5 of this rule, the source shall comply with both the applicable requirements governing the change and the proposed revised permit terms and conditions. During this time period, the Title V source need not comply with the existing permit terms and conditions it seeks to modify. However, if the Title V source fails to comply with its proposed permit terms and conditions during this time period, the Control Officer may enforce existing permit terms and conditions, which the Title V source seeks to revise.

405.7 **Permit Shield:** The permit shield under Section 407 of this rule shall not extend to minor permit revisions.

405.8 Notwithstanding any other part of this rule, the Control Officer may require a permit to be revised under Section 406 of this rule for any change that, when considered together with any other changes submitted by the same source under this rule or under Section 404 of this rule over the life of the permit, do not satisfy Section 405.1 of this rule.

405.9 The Control Officer shall make available to the public monthly summaries of all applications for minor permit revisions.

406 SIGNIFICANT PERMIT REVISIONS:

406.1 A significant permit revision shall be used for an application requesting a permit revision that does not qualify as a minor permit revision nor as an administrative permit amendment.

406.2 A significant permit revision that is only required because of a change described in Section 405.1(f) or Section 405.1(g) of this rule shall not be considered a significant permit revision under Part 70 for the purposes of 40 C.F.R. 64.5(a)(2). Every significant change in existing monitoring permit terms or conditions and every relaxation of reporting or recordkeeping permit terms or conditions shall follow significant permit revision procedures.

406.3 Any modification to a maj or source of federally listed hazardous air pollutants, and any reconstruction of a source, or a process or production unit, under Section 112(g) of the Act and regulations promulgated thereunder, shall follow significant permit revision procedures and Rule 372-Maricopa County Hazardous Air Pollutants (HAPs) Program of these rules.

406.4 All modifications to sources subject to Rule 372-Maricopa County Hazardous Air Pollutants (HAPs) Program of these rules shall follow significant permit revision procedures.

406.5 Significant permit revisions shall meet all requirements of this rule for applications, public participation, review by affected States, and review by the Administrator, that apply to permit issuance and renewal.

406.6 The Control Officer shall process the majority of significant permit revision applications received each calendar year within nine months of receipt of a complete permit application but in no case longer than 18 months. Applications for which the Control Officer undertakes the accelerated permitting process, under Rule 200, Section 312 of these rules, shall not be included in this requirement. Section 406.7 of this rule does not change any time-frame requirements in Section 301 of this rule.

407 PERMIT SHIELDS:

407.1 Each Title V permit issued under this rule shall specifically identify all federal, state, and local air pollution control requirements applicable to the Title V source at the time the Title V permit is issued. The Title V permit shall state that compliance with the conditions of the Title V permit shall be deemed compliance with any applicable requirement as of the date of Title V permit issuance, provided that such applicable requirements are included and expressly identified in the Title V permit. The Control Officer may include in a Title V permit determination that other requirements specifically identified are not applicable. Any Title V permit issued under

this rule that does not expressly state that a permit shield exists shall not provide such a shield.

407.2 Nothing in this rule or in any permit shall alter or affect the following:

a. The provisions of Section 303 of the Act-Emergency Orders, including the authority of the Administrator under that section.

b. The liability of an owner or operator of a source for any violation of applicable requirements prior to or at the time of permit issuance.

c. The applicable requirements of the acid rain program, consistent with Section 408(a) of the Act.

d. The ability of the Administrator or of the Control Officer to obtain information from a source under Section 114 of the Act, or any provision of State law.

e. The authority of the Control Officer to require compliance with new applicable requirements adopted after the permit is issued.

407.3 In addition to the provisions of Rule 200-Permit Requirements of these rules, a permit shall be reopened by the Control Officer and the permit shield revised, when it is determined that standards or conditions in the permit are based on incorrect information provided by the applicant.

408 PUBLIC PARTICIPATION:

408.1 The Control Officer shall provide public notice, an opportunity for public comment, and an opportunity for a hearing before taking any of the following actions for a source required to obtain a permit under Title V of the Clean Air Act:

a. Issuing or renewing a permit.

b. Issuing a significant permit revision.

c. Revoking and reissuing or reopening a permit.

d. Issuing a conditional order under Rule 120-Conditional Orders of these rules.

e. Granting a variance from a general permit under Rule 230-General Permits of these rules and Rule 372-Maricopa County Hazardous Air Pollutants (HAPs) Program of these rules.

408.2 The Control Officer shall provide public notice of receipt of complete applications for major sources by publishing a notice in a newspaper of general circulation in Maricopa County.

408.3 The Control Officer shall provide the notice required under Section 408.1 of this rule as follows:

a. The Control Officer shall publish the notice once each week for two consecutive weeks in two newspapers of general circulation in the county where the source is or will be located.

b. The Control Officer shall mail a copy of the notice to persons on a mailing list developed by the Control Officer consisting of those persons who have requested in writing to be placed on such a mailing list.

c. The Control Officer shall give notice by other means if necessary to assure adequate notice to the affected public.

408.4 The notice required by Section 408.3 of this rule shall include the following:

a. Identification of the affected facility;

b. Name and address of the permittee or applicant;

c. Name and address of the permitting authority processing the permit action;

d. The activity or activities involved in the permit action;

e. The emissions change involved in any permit revision;

f. The air contaminants to be emitted;

g. A statement that any person may submit written comments, or a written request for a public hearing, or both, on the proposed permit action along with the deadline for such requests or comments;

h. The name, address, and telephone number of a person from the Department from whom additional information may be obtained;

i. Locations where copies of the permit or permit revision application, the proposed permit, and all other materials available to the Control Officer that are relevant to the permit decision may be reviewed, including the closest Department office, and the times at which such materials shall be available for public inspection;

j. A summary of any notice of confidentiality filed under Rule 100-General Provisions And Definitions of these rules; and

k. If applicable, a statement that the source has submitted a risk management analysis (RMA) under Rule 372-Maricopa County Hazardous Air Pollutants (HAPs) Program of these rules.

l. A statement in the public record if the permit or permit revision would result in the generation of emission reduction credits under A.A.C. R18-2-1204-Title 18, Chapter 2, Article 12 or the utilization of emission reduction credits under A.A.C. R18-2-1206-Title 18, Chapter 2, Article 12.

408.5 The Control Officer shall hold a public hearing to receive comments on petitions for conditional orders, which would vary from requirements of the applicable implementation plan. For all other actions involving a proposed permit, the Control Officer shall hold a public hearing only upon written request. If a public hearing is requested, the Control Officer shall schedule the hearing and publish notice as described in A.R.S. §49-498 and in Section 408.4 of this rule. The Control Officer shall give notice of any public hearing at least 30 days in advance of the hearing.

408.6 At the time the Control Officer publishes the first notice under Section 408.3(a) of this rule, the applicant shall post a n otice containing the information required in Section 408.4 of this rule at the site where the source is or may be located. Consistent with federal, State, and local law, the posting shall be prominently placed at a location under the applicant's legal control, adjacent to the nearest public roadway, and visible to the public using the public roadway. If a public hearing is to be held, the applicant shall place an additional posting providing notice of the hearing. Any posting shall be maintained until the public comment period is closed.

408.7 The Control Officer shall provide at least 30 days from the date of the first notice for public comment. The Control Officer shall keep a record of the commenters and of the issues raised during the public participation process and shall prepare written responses to all comments received. At the time a final decision is made, the record and copies of the Control Officer's responses shall be made available to the applicant and to all commenters.

SECTION 500 – MONITORING AND RECORDS (NOT APPLICABLE)

REGULATION II - PERMITS AND FEES

RULE 220

NON-TITLE V PERMIT PROVISIONS

INDEX

SECTION 100 - GENERAL

101 PURPOSE

102 APPLICABILITY

SECTION 200 – DEFINITIONS (NOT APPLICABLE)

SECTION 300 - STANDARDS

301 PERMIT APPLICATION PROCESSING PROCEDURES

302 PERMIT CONTENTS

303 COMPLIANCE PLANS

304 PERMITS CONTAINING VOLUNTARILY ACCEPTED EMISSIONS LIMITATIONS, CONTROLS, OR OTHER REQUIREMENTS (SYNTHETIC MINOR)

SECTION 400 - ADMINISTRATIVE REQUIREMENTS

401 FEES REQUIRED

402 PERMIT TERM

403 SOURCE CHANGES THAT REQUIRE NON-TITLE V PERMIT REVISIONS

404 PROCEDURES FOR CERTAIN CHANGES THAT DO NOT REQUIRE A NON-TITLE V PERMIT REVISION

405 PERMIT REVISIONS

406 PERMIT REVISIONS PROCEDURES

407 PUBLIC PARTICIPATION

408 AMENDMENTS TO A PERMIT

SECTION 500 - MONITORING AND RECORDS

501 LOG RETENTION REQUIREMENT

502 LOG FORMAT SPECIFICATIONS

503 LOG FILING

Revised 07/13/88
Repealed And Adopted 11/15/93
Revised 02/15/95
Revised 06/19/96
Revised 03/04/98
Revised 07/26/00
Revised 05/07/03
Revised 06/06/07

MARICOPA COUNTY
AIR POLLUTION CONTROL REGULATIONS
REGULATION II - PERMITS AND FEES
RULE 220
NON-TITLE V PERMIT PROVISIONS

SECTION 100 - GENERAL

101 PURPOSE: To provide an orderly procedure for the review of Non-Title V sources of air pollution through the issuance of Non-Title V permits.

102 APPLICABILITY: This rule applies to each source requiring a Non-Title V permit or permit revision.

SECTION 200 - DEFINITIONS (NOT APPLICABLE)

See Rule 100-General Provisions And Definitions of these rules for definitions of terms that are used but not specifically defined in this rule.

SECTION 300 - STANDARDS

301 PERMIT APPLICATION PROCESSING PROCEDURES:

301.1 Standard Application Form And Required Information: To apply for a permit under this rule, applicants shall complete a permit application filed in the manner and form prescribed by the Control Officer. The Control Officer, either upon the Control Officer's own initiative or upon the request of a permit applicant, may waive the requirement that specific information or data for a particular source or category of sources be submitted in the Non-Title V permit application. However, the Control Officer must determine that the information or data would be unnecessary to determine all of the following:

a. The applicable requirements to which the source may be subject;

b. The design and control of the air pollution control equipment such that the source may be expected to operate without emitting or without causing to be emitted air contaminants in violation of these rules;

c. The fees to which the source may be subject under Rule 280-Fees of these rules; and

d. A proposed emission limitation, control, or other requirement that meets the requirements of Section 304 of this rule.

301.2 Permit Application And A Compliance Plan:

a. A permit application, required by this rule, shall include a compliance plan, if applicable, which meets the requirements of Section 303 of this rule when a notice of violation has been issued and not resolved at the time the permit application is filed.

b. A permit application, required by this rule, can include a compliance plan, if applicable, which meets the requirements of Section 303 of this rule when the following circumstances occur:

(1) When a source is not in compliance with these rules but has not been issued a notice of violation,

(2) Under other circumstances determined by the Control Officer.

301.3 A Timely Permit Application:

a. Unless otherwise required by Rule 200-Permit Requirements of these rules and for purposes of permit renewal, a timely application is one that is submitted at least six months, but not more than 18 months, prior to the date of permit expiration.

b. Unless otherwise required by Rule 200-Permit Requirements of these rules and for any existing source which becomes subject to a standard promulgated by the Administrator under Section 112(d) of the Act-Hazardous Air Pollutants-Emission Standards, a timely application is a permit revision application that is submitted within 12 months of the date on which the standard is promulgated. Such permit revision application shall be subject to Rule 210-Title V Permit Provisions of these rules.

301.4 A complete application is one that satisfies all of the following:

a. To be complete, an application shall provide all information required under Section 301.1 of this rule, except that notifications of permit revision need supply such information only if it is related to the proposed change. A responsible official shall certify the submitted information, consistent with Section 301.6 of this rule.

b. To be complete, an application for a new permit or a notification of a permit revision shall contain an assessment of the applicability of the requirements of Rule 241-Permits For New Sources And Modifications To Existing Sources of these rules and shall comply with all applicable requirements of Rule 241-Permits For New Sources And Modifications To Existing Sources of these rules.

c. To be complete, an application for a new permit or a notification of a permit revision shall contain an assessment of the applicability of the requirements established under Rule 372-Maricopa County Hazardous Air Pollutants (HAPs) Program of these rules. If the proposed new source permit or the proposed permit revision is subject to the requirements of Rule 372-Maricopa County Hazardous Air Pollutants (HAPs) Program of these rules, the application shall comply with all applicable requirements of Rule 372-Maricopa County Hazardous Air Pollutants (HAPs) Program of these rules.

d. An application for a new permit, a notification of a permit revision, or a permit renewal shall be deemed to be complete unless the Control Officer notifies the applicant by certified mail within 60 days of receipt of the application that the application is not complete and specifies what additional information is necessary for the application to be complete.

e. If, while processing an application that has been determined or deemed to be complete, the Control Officer determines that additional information is necessary to evaluate or to take final action on that application, the Control Officer may request such information in writing and may set a reasonable deadline for a response. Except for minor permit revisions procedures as set forth in Section 406 of this rule, a source's ability to continue operating without a permit, as set forth in this rule, shall be in effect from the date the application is determined to be complete until the final permit is issued, provided that the applicant submits any requested additional information by the deadline specified by the Control Officer. The Control Officer may, after one submittal by the applicant under this rule, reject an application that is still determined to be incomplete and shall notify the applicant of the decision by certified mail.

f. The completeness determination shall not apply to revisions processed through the minor permit revision process.

g. The Control Officer agrees with the notice of confidentiality submitted under A.R.S. §49-487.

h. Any emission source or equipment item listed in Rule 200-Permit Requirements of these rules shall be included in the application. The application need not provide emissions data regarding the activities listed in Rule 200-Permit Requirements of these rules. If the Control Officer determines that a source or an activity listed on the application does not meet the requirements of Rule 200-Permit Requirements of these rules, the Control Officer shall notify the applicant in writing and specify additional information required, which may include emissions data and supporting documents.

i. If a source wishes to voluntarily enter into an emissions limitation, control, or other requirement pursuant to Section 304 of this rule, a source shall describe that emissions limitation, control, or other requirement in its application, along with proposed associated monitoring, recordkeeping, and reporting requirements necessary to demonstrate that the emissions limitation, control, or other requirement is permanent, quantifiable, and otherwise enforceable as a practical matter.

301.5 Duty To Supplement Or Correct Application: Any applicant who fails to submit any relevant facts or who has submitted incorrect information in a permit application shall, upon becoming aware of such failure or incorrect submittal, promptly submit such supplementary facts or corrected information. In addition, an applicant shall provide additional information as necessary to address any requirements that become applicable to the source after the date it filed a complete application but prior to release of a proposed permit.

301.6 Action On Application:

a. The Control Officer may issue a permit with a compliance schedule for a source that is not in compliance with all applicable requirements at the time of permit issuance.

b. For Non-Title V permits that contain voluntary emission limits, controls, or other requirements established under Section 304 of this rule, the Control Officer shall have complied with the requirement of Section 304.4 of this rule to provide the Administrator with a copy of each such proposed permit. In addition, the Control Officer may issue, revise, or renew a permit only if all of the following conditions have been met:

(1) The permit application received must be complete according to Section 301.4 of this rule.

(2) Except for revisions qualifying as administrative or minor under Sections 405.1 and 405.2 of this rule, all of the requirements for public notice and participation under Section 407 of this rule must have been met.

(3) The conditions of the permit shall require compliance with all applicable requirements.

(4) For permits for which an application is required to be submitted to the Administrator under Section 304 of this rule, and to which the Administrator has properly objected to its issuance in writing within 45 days of receipt of the proposed final permit and all necessary supporting information from the Control Officer, the Control Officer has revised and submitted a proposed final permit in response to the objection and the Administrator has not objected to this proposed final permit.

c. The Control Officer may issue a notice of revocation of a permit issued under this rule if:

(1) The Control Officer has reasonable cause to believe that the permit was obtained by fraud or misrepresentation.

(2) The person applying for the permit failed to disclose a material fact required by the permit application form or the regulation applicable to the permit, of which the applicant had or should have had knowledge at the time the application was submitted.

(3) The terms and conditions of the permit have been or are being violated and the violation has not been corrected within a reasonable period of time as specified by the Control Officer.

d. If the Control Officer issues a notice of denial or revocation of a permit under this rule, the notice shall be served on the applicant or permittee by certified mail, return receipt requested. The notice shall include a statement detailing the grounds for the denial or revocation and explaining that the permit applicant or permittee is entitled to a hearing under A.R.S. §49-482.

e. Except as provided in Rule 200-Permit Requirements of these rules, the Control Officer shall take final action on each permit application (and request for revision or renewal) within 90 days of receipt of a complete application, unless a finding is made that more time is needed, but in no case longer than nine months after receiving a complete application.

301.7 Except as noted under the provisions in Section 404 of this rule, no source may operate after the time that it is required to submit a timely and complete application, except in compliance with a permit issued under this rule. However, if a source submits a timely and complete application for permit issuance, revision, or renewal, the source's failure to have a permit is not a violation of these rules until the Control Officer takes final action on the application. This protection shall cease to apply if, subsequent to the completeness determination, the applicant fails to submit, by the deadline specified in writing by the Control Officer, any additional information identified as being needed to process the application. If a source submits a timely and complete application for a permit renewal, but the Control Officer fails to issue or deny the renewal permit before the end of the term of the previous permit, then the permit shall not expire until the permit renewal has been issued or denied.

302 PERMIT CONTENTS: Each permit issued under this rule shall include the following elements:

302.1 The date of issuance and the permit term.

302.2 Enforceable emission limitations and standards, including those operational requirements and limitations that ensure compliance with all applicable requirements at the time of issuance, and operational requirements and limitations that have been voluntarily accepted under Section 304 of this rule, or that have been voluntarily accepted under Rule 201-Emissions Caps of these rules. Whenever more than one standard in this rule applies to any source, or whenever a standard in this rule and a standard in the Maricopa County Air Pollution Control Regulations Regulation III-Control Of Air Contaminants applies to any source, the rule or combination of rules resulting in the lowest rate or lowest concentration of regulated air pollutants released to the atmosphere shall apply, unless otherwise specifically exempted or designated.

302.3 A compliance plan, if applicable, which meets the requirements of Section 303 of this rule.

302.4 As necessary, requirements concerning the use, maintenance, and if applicable, installation of monitoring equipment or methods.

302.5 Periodic monitoring sufficient to yield reliable data from the relevant time period that are representative of the source's compliance with the permit, if

the applicable requirement does not require periodic testing or instrumental or noninstrumental monitoring (which may consist of recordkeeping designed to serve as monitoring). The monitoring requirements shall ensure use of terms, test methods, units, averaging periods, and other statistical conventions consistent with the applicable requirement and as otherwise required under Section 304 of this rule. Recordkeeping provisions may be sufficient to meet the requirements of this rule.

302.6 All emissions monitoring and analysis procedures or test methods required under the applicable requirements, including any procedures and methods promulgated under Section 114(a)(3) of the Act and including any monitoring and analysis procedures or test methods required under Section 304 of this rule.

302.7 All recordkeeping requirements, including recordkeeping requirements established under Section 304 of this rule, if applicable, for the retention of records of all required monitoring data and support information for a period of at least five years from the date of the monitoring sample, measurement, report, or application. Support information includes all calibration and maintenance records, all strip-chart recordings for continuous monitoring instrumentation, and copies of all reports required by the permit.

302.8 All applicable reporting requirements and require the submittal of any required monitoring reports at least annually. Upon request, such reporting requirements shall require prompt reporting of deviations from permit requirements, including those deviations attributable to upset conditions, as defined in the permit. Reports of deviations shall include the probable cause of the deviations and any corrective actions or preventative measures taken. For the purposes of this Section, reporting shall be considered prompt when such reporting is made in accordance with Rule 130-Emergency Provisions of these rules.

302.9 A severability clause to ensure the continued validity of the various permit requirements in the event of a challenge to any portion of the permit.

302.10 Provisions stating that it shall not be a defense for a permittee in an enforcement action that it would have been necessary to halt or reduce the permitted activity in order to maintain compliance with the conditions of the permit.

302.11 Provisions stating that the permit may be revised, reopened, revoked and reissued, or terminated for cause. The filing of a request by the permittee for a permit revision, revocation and reissuance, or termination, or of a notification of planned changes or anticipated non-compliance does not stay any permit condition.

302.12 Provisions stating that the permit does not convey any property rights nor does it convey exclusive privileges of any sort.

302.13 Provisions stating that the permittee shall furnish to the Control Officer, within a reasonable time, any information that the Control Officer may request in writing to determine whether cause exists for revising, revoking and reissuing the permit, or terminating the permit, or to determine compliance with the permit. Upon request, the permittee shall also furnish, to the Control Officer copies of records required to be kept by the permit.

302.14 Provisions stating that any document required to be submitted by a permit, including reports, shall contain certification by a responsible official of truth, accuracy, and completeness under Rule 100-General Provisions And Definitions of these rules.

302.15 A provision to ensure that a source pays fees to the Control Officer under A.R.S. §49-480(D) and Rule 280-Fees of these rules.

302.16 Terms and conditions for reasonably anticipated operating scenarios identified by the source in its application as approved by the Control Officer. Such terms and conditions shall require the source, contemporaneously with making a change from one operating scenario to another, to record in a log at the permitted source a record of the scenario under which it is operating. The terms and conditions of each such alternative scenario must meet all applicable requirements and the requirements of this rule.

302.17 Inspection and entry provisions which require the permittee to allow the Control Officer, upon presentation of proper credentials, to enter upon the permittee's premises, where a source is located or where emission-related activity is conducted, or where records are required to be kept, under the conditions of the permit.

302.18 Inspection and entry provisions which require the permittee to allow the Control Officer, upon presentation of proper credentials, to have access to and to copy, at reasonable times, any records that are required to be kept under the conditions of the permit.

302.19 Inspection and entry provisions which require the permittee to allow the Control Officer, upon presentation of proper credentials, to inspect, at reasonable times, any source's equipment (including monitoring and air pollution control equipment), practices, or operations regulated or required under the permit.

302.20 Inspection and entry provisions which require the permittee to allow the Control Officer, upon presentation of proper credentials, to sample or monitor, at reasonable times, substances or parameters for the purpose of assuring compliance with the permit or other applicable requirements.

302.21 Inspection and entry provisions which require the permittee to allow the Control Officer, upon presentation of proper credentials, to record any inspection by use of written, electronic, magnetic, and photographic media.

302.22 Provisions specifying the conditions under which the permit will be reopened prior to the expiration date of the permit.

302.23 **Federally Enforceable Requirements:** Designated terms and conditions contained in Non-Title V permits issued under Rule 220-Non-Title V Permit Provisions of these rules will be considered federally enforceable, provided that the County's Permit Program is approved by the Administrator and incorporated into the applicable State Implementation Plan (SIP) under Section 110 of the Act, and the permit meets the requirements set forth in Section 304 of this rule:

a. Terms or conditions designated as federally enforceable in a Non-Title V permit, including but not limited to those that are entered into voluntarily under Section 304 of this rule and which have been submitted to the Administrator for review, include:

(1) Emissions limitations, controls, or other requirements; and

(2) Monitoring, recordkeeping, and reporting requirements associated with the emissions limitations, controls, or other requirements.

b. The Control Officer shall specifically designate as not being federally enforceable under the Act any terms and conditions included in a Non-Title V permit that are not required under the Act, or under any such applicable requirements, or that are not entered into voluntarily under Section 304 of this rule.

303 COMPLIANCE PLANS: Each compliance plan shall contain the following elements:

303.1 A description of the compliance status of the source with respect to applicable requirements that will become effective during the permit term or for which the source is not in compliance at the time of permit issuance.

303.2 A description as follows:

a. For applicable requirements that will become effective during the permit term, a statement that the source will meet such requirements on a timely basis.

b. For requirements with which the source is not in compliance at the time of permit issuance, a narrative description of how the source will achieve compliance with such requirements.

c. For additional requirements as may be specified under Section 304 of this rule.

303.3 A compliance schedule as follows:

a. For applicable requirements that will become effective during the permit term, a statement that the source will meet such requirements on a timely basis. A statement that the source will meet in a timely manner applicable requirements that become effective during the permit term shall satisfy this rule, unless a more detailed schedule is expressly required by the applicable requirement.

b. A schedule of compliance for sources that are not in compliance with all applicable requirements at the time of permit issuance. Such a schedule shall include a schedule of remedial measures, including an enforceable sequence of actions with milestones, leading to compliance with any applicable requirement for which the source will be in non-compliance at the time of permit issuance. This compliance schedule shall resemble and be at least as stringent as that contained in any judicial consent decree or administrative order to which the source is subject. Any such schedule of compliance shall be supplemental to, and shall not sanction non-compliance with, the applicable requirements on which it is based.

303.4 A schedule for submission of certified progress reports no less frequently than every six months for sources required to have a schedule of compliance to remedy a violation. Such schedule shall contain:

a. Dates for achieving the activities, milestones, or compliance required in the schedule of compliance, and dates when such activities, milestones, or compliance were achieved; and

b. An explanation of why any dates in the schedule of compliance were not or will not be met, and any preventive or corrective measures adopted.

303.5 If there is a Federal Implementation Plan (FIP) applicable to the source, a provision that compliance with the FIP is required.

303.6 The Control Officer may develop special guidance documents and forms to assist certain sources in completing the compliance plan.

304 PERMITS CONTAINING VOLUNTARILY ACCEPTED EMISSIONS LIMITATIONS, CONTROLS, OR OTHER REQUIREMENTS (SYNTHETIC MINOR):

304.1 A source may voluntarily propose in its application, and accept in its permit, emissions limitations, controls, or other requirements that are permanent, quantifiable, and otherwise enforceable as a practical matter in order to avoid classification as a source that requires a Title V permit, or to avoid one or more other applicable requirements. For the purposes of this rule, "enforceable as a practical matter" means that specific means to assess compliance with an emissions limitation, control, or other requirement are provided for in the permit in a manner that allows compliance with the limit standard or trade provision to be readily determined by an inspection of the source records or reports. In addition, for the purposes of this rule, "enforceable as a practical matter" shall include the following criteria:

a. The permit conditions are permanent and quantifiable;

b. The permit includes a legally enforceable obligation to comply;

c. The permit limits impose an objective and quantifiable operational or production limit, or require the use of in-place air pollution control equipment;

d. The permit limits have short-term averaging times consistent with the averaging times of the applicable requirement;

e. The permit conditions are enforceable and are independent of any other applicable limitations; and

f. The permit conditions for monitoring, recordkeeping, and reporting requirements are sufficient to comply with Rule 220-Non-Title V Permit Provisions, Sections 302.3, 302.4, 302.5, 302.6, and 302.7 of these rules.

304.2 In order for a source to obtain a permit containing voluntarily accepted emissions limitations, controls, or other requirements, the source shall demonstrate all of the following in its permit application:

a. The emissions limitations, controls, or other requirements to be imposed for the purpose of avoiding an applicable requirement are at least as stringent as the emissions limitations, controls, or other requirements that would otherwise be applicable to that source, including those that originate in an applicable implementation plan; and

b. All voluntarily accepted emissions limitations, controls, or other requirements will be permanent, quantifiable, and otherwise enforceable as a practical matter.

304.3 The Control Officer shall not issue a permit that waives nor makes less stringent any limitations or requirements contained in or issued under an applicable implementation plan or that are otherwise federally enforceable.

304.4 At the same time as notice of proposed issuance is first published under A.R.S. §49-426(D), the Control Officer shall send a copy of any Non-Title V permit proposed to be issued under Section 304 of this rule to the Administrator review during the comment period described in the notice under Section 407 of this rule.

304.5 The Control Officer shall send a copy of each final permit issued under Section 304 of this rule to the Administrator.

304.6 For all permits containing voluntarily accepted emission limitations, controls, or other requirements established under this section, the Control Officer shall provide an opportunity for public participation as provided for in Section 407 of this rule.

SECTION 400 - ADMINISTRATIVE REQUIREMENTS

401 **FEES REQUIRED:** Persons subject to this rule shall pay the fees required, as set forth in Rule 280-Fees of these rules.

402 **PERMIT TERM:** A Non-Title V permit shall remain in effect for no more than five years.

403 **SOURCE CHANGES THAT REQUIRE NON-TITLE V PERMIT REVISIONS:**

403.1 A source with a Non-Title V permit may make any physical change or change in the method of operation without revising the source's permit, unless the change is specifically prohibited in the source's permit or is a change described in the following subsections. A change that does not require a permit revision may still be subject to requirements in Section 404 of this rule.

403.2 The following changes at a source with a Non-Title V permit shall require a permit revision:

a. A change that triggers a new applicable requirement or violates an existing applicable requirement;

b. Establishment of, or change in, an emissions cap;

c. A change that will require a case-by-case determination of an emissions limitation or other standard, or a source specific determination of ambient impacts, or a visibility or increment analysis;

d. A change that results in emissions which are subject to monitoring, recordkeeping, or reporting under Sections 302.6, 302.7, and 302.8 of this rule, if the emissions cannot be measured or otherwise adequately quantified by monitoring, recordkeeping, or reporting requirements already in the permit;

e. A change that will authorize the burning of used oil, used oil fuel, hazardous waste or hazardous waste fuel, or any other fuel not currently authorized by the permit;

f. A change that requires the source to obtain a Title V permit under Rule 210-Title V Permit Provisions of these rules;

g. Replacement of an item of air pollution control equipment listed in the permit with one that does not have the same or better pollutant removal efficiency;

h. Establishment or revision of an emissions limit under Section 304 of this rule;

i. Increasing operating hours or rates of production above the permitted level; and

j. Making a change that relaxes monitoring, recordkeeping, or reporting requirements, except when the change results:

(1) From removing equipment that results in a permanent decrease in actual emissions, if the source keeps on-site records of the change in a log that satisfies Section 500 of this rule and if the requirements that are relaxed are present in the permit solely for the equipment that was removed; or

(2) From a change in an applicable requirement.

404 PROCEDURES FOR CERTAIN CHANGES THAT DO NOT REQUIRE A NON-TITLE V PERMIT REVISION:

404.1 Except for a physical change or change in the method of operation at a Non-Title V source requiring a permit revision under Section 403 of this rule or a change subject to logging or notice requirements in Section 404.2 of this rule or Section 404.3 of this rule, a change at a Non-Title V source shall not be subject to revision, notice, or logging requirements under these rules.

404.2 Except as otherwise provided in the conditions applicable to an emissions cap created under Rule 201-Emissions Caps of these rules, the following changes may be made if the source keeps on-site records of the changes according to Section 500 of this rule:

a. Implementing an alternative operating scenario, including raw material changes;

b. Changing process equipment, operating procedures, or making any other physical change if the permit requires the change to be logged;

c. Engaging in any new exempted activity listed in Rule 200-Permit Requirements, Section 303.3(c) of these rules, but not listed in the permit;

d. Replacing an item of air pollution control equipment listed in the permit with an identical (same model, different serial number) item. The Control Officer may require verification of efficiency of the new equipment by performance tests; and

e. Making a change that results in a decrease in actual emissions, if the source wants to claim credit for the decrease in determining whether the source has a net emissions increase for any purpose. The logged information shall include a description of the change that will produce the decrease in actual emissions. A decrease that has not been logged is creditable only if the decrease is quantifiable, enforceable, and otherwise qualifies as a creditable decrease.

404.3 Except as otherwise provided in the conditions applicable to an emissions cap created under Rule 201-Emissions Caps of these rules, the following changes may be made if the source provides written notice to the Control Officer in advance of the change as provided below:

a. Replacing an item of air pollution control equipment listed in the permit with one that is not identical but that is substantially similar and has the same or better pollutant removal efficiency: 7 days. The Control Officer may require verification of efficiency of the new equipment by performance tests;

b. Making a physical change or change in the method of operation that increases actual emissions more than 10% of the major source threshold for any conventional air pollutant but does not require a permit revision: 7 days;

c. Replacing an item of air pollution control equipment listed in the permit with one that is not substantially similar but that has the same or better efficiency: 30 days. The Control Officer may require verification of efficiency of the new equipment by performance tests;

d. Making any change that would trigger an applicable requirement that already exists in the permit: 30 days, unless otherwise required by the applicable requirement;

e. Making a change that amounts to reconstruction of the source or an affected facility: 7 days. For purposes of this section reconstruction of a source or an affected facility shall be presumed if the fixed capital cost of the new components exceed 50% of the fixed capital cost of a comparable entirely new source or affected facility and the changes to the components have occurred over the 12 consecutive months beginning with commencement of construction; and

f. Making a change that will result in the emissions of a new regulated air pollutant above an applicable regulatory threshold, but that does not trigger a new applicable requirement for that source category: 30 days. For purposes of this requirement, an applicable regulatory threshold for a conventional air pollutant shall be 10% of the applicable major source threshold for that pollutant.

404.4 For each change under Section 404.3 of this rule, the written notice shall be by certified mail or hand delivery and shall be received by the Control Officer the minimum amount of time in advance of the change. Notifications of changes associated with emergency conditions, such as malfunctions necessitating the replacement of equipment, may be provided with less than required notice, but must be provided as far in advance of the change, or if advance notification is not practicable, as soon after the change, as possible.

404.5 The written notice shall include:

a. When the proposed change will occur;

b. A description of the change;

c. Any change in emissions of regulated air pollutants; and

d. Any permit term or condition that is no longer applicable as a result of the change.

404.6 Notwithstanding any other part of this section of this rule, the Control Officer may require a p ermit to be revised for any change that, when considered together with any other changes submitted by the same source under this section of this rule over the term of the permit, constitutes a change under Section 403.2 of this rule.

404.7 If a source change is described under both Section 404.2 of this rule and Section 404.3 of this rule, the source shall comply with Section 404.3 of this rule.

404.8 If a source change is described under both Section 404.3 of this rule and Section 403.1 of this rule, the source shall comply with Section 403.1 of this rule.

404.9 A source may implement any change under Section 404.3 of this rule without the required notice by applying for a minor permit revision under Section 405.2 of this rule and complying with Section 406.1 of this rule.

405 PERMIT REVISIONS:

405.1 Administrative Permit Revisions:

a. An administrative permit revision is required to correct typographical errors in a Non-Title V Permit.

b. An administrative permit revision is required to change the name, address, or phone number of any person identified in the Non-Title V permit.

c. An administrative permit revision is required to change ownership or operational control of a source with a Non-Title V permit, where the Control Officer determines that no other change in the permit is necessary, provided that a written agreement containing a specific date for the change of permit responsibility and liability between the current and new permittee has been submitted to the Control Officer.

d. Incorporates any other type of change which the Control Officer has determined to be similar to those changes described in this subsection.

405.2 Minor Permit Revisions:

a. Minor permit revision procedures shall be used for a change that triggers a new applicable requirement, if all of the following apply:

(1) For emissions units not subject to an emissions cap, the net emissions increase is less than the significance level defined in Rule 100-General Provisions And Definitions of these rules;

(2) A case-by-case determination of an emissions limitation or other standard is not required; and

(3) The change does not require the source to obtain a Title V permit under Rule 210-Title V Permit Provisions of these rules.

b. Minor permit revision procedures shall be used for a change that increases operating hours or rates of production above the permitted level, unless the increase otherwise creates a condition that requires a non-minor permit revision;

c. Minor permit revision procedures shall be used for a change in fuel from fuel oil or coal to natural gas or propane, if not authorized in the permit;

d. Minor permit revision procedures shall be used for a change that results in emissions subject to monitoring, recordkeeping, or reporting under Sections 302.6, 302.7, or 302.8 of this rule and that cannot be measured or otherwise adequately quantified by monitoring, recordkeeping, or reporting requirements already in the permit;

e. Minor permit revision procedures shall be used for a change that decreases emissions permitted under an emissions cap under Rule 201-Emissions Caps of these rules, unless the decrease requires a change in the conditions required to enforce the emissions cap or to ensure that emissions trades conducted under the emissions cap are quantifiable and enforceable; and

f. Minor permit revision procedures shall be used for a change that replaces an item of air pollution control equipment listed in the permit with one that does not have the same or better efficiency.

405.3 Non-Minor Permit Revisions: A source with a Non-Title V permit shall make the following changes only after its permit is revised following the public participation requirements of Section 407 of this rule:

a. Establishing or revising a voluntarily accepted emission limitation or standard described in Section 304 of this rule, or an emissions cap described in Rule 201-Emissions Caps of these rules, except a decrease in the limitation authorized by Section 405.2(e) of this rule;

b. Making any change in fuel not authorized by the Non-Title V permit and that is not fuel oil or coal to natural gas or propane;

c. A change to, or an addition of, an emissions unit not subject to an emissions cap that will result in a net emissions increase of a pollutant greater than the significance level defined in Rule 100-General Provisions And Definitions of these rules;

d. A change that relaxes monitoring, recordkeeping, or reporting requirements, except when the change results:

(1) From removing equipment that results in a permanent decrease in actual emissions, if the source keeps on-site records of the change in a log that satisfies Section 500 of this rule and if the requirements that are relaxed are present in the permit solely for the equipment that was removed; or

(2) From a change in an applicable requirement.

e. A change that will cause the source to violate an existing applicable requirement, including the conditions establishing an emissions cap;

f. A change that will require any of the following:

(1) A case-by-case determination of an emission limitation or other standard;

(2) A source-specific determination of ambient impacts or a visibility or increment analysis; or

(3) A case-by-case determination of a monitoring, recordkeeping, and reporting requirement.

g. A change that requires the source to obtain a Title V permit under Rule 210-Title V Permit Provisions of these rules.

406 PERMIT REVISIONS PROCEDURES:

406.1 The Source's Responsibility For A Notification Of A Permit Revision: A source shall submit to the Control Officer a notification of a Non-Title V permit revision, in a form and manner as prescribed by the Control Officer, with the appropriate fee as required by Rule 280-Fees of these rules. In a notification of a Non-Title V permit revision, a source must supply information that is related to the proposed change. If the source's proposed Non-Title V permit revision will revise its Non-Title V permit from a Non-Title V permit to a Title V permit, then the source must submit a Title V permit application in accordance with Rule 210-Title V Permit Provisions of these rules. The Control Officer shall issue the entire Title V permit, and not just the portion of the Non-Title V permit being revised, in accordance with Title V permit content and issuance requirements, including requirements for public, affected state, and EPA review contained in Rule 210-Title V Permit Provisions of these rules.

406.2 The Control Officer's Responsibility For Action On A Notification Of A Permit Revision:

a. Administrative Permit Revision: The Control Officer shall take final action within 60 days of receipt of a notification of an administrative permit revision.

b. Minor Permit Revision: The Control Officer shall do one or more of the following within 60 days of receipt of a notification of a minor permit revision:

(1) Issue the minor permit revision as proposed;

(2) Deny the minor permit revision application; or

(3) Determine that the minor permit revision does not meet the minor permit revision criteria and should be reviewed under the non-minor permit revision procedures.

c. Non-Minor Permit Revision: The Control Officer shall take final action on the majority of the notifications of non-minor permit revisions within 90 days of receipt. In no case shall the final action take longer than nine months.

406.3 The Source's Ability To Make Changes Requested In A Notification Of A Permit Revision:

a. Administrative Permit Revision Or Minor Permit Revision:

(1) A source may implement the changes addressed in the administrative permit revision application or in a minor permit revision application after it files the application.

(2) A source shall still comply with any Federal laws, Arizona laws, or these rules, and a source shall comply with the "new" permit conditions that the source proposes in its notification of a minor permit revision. The Control Officer may enforce the existing permit conditions if the Control Officer determines that the source is not complying with the "new" permit conditions.

b. Non-Minor Permit Revision: A source may implement the changes addressed in the notification for a non-minor permit revision upon the Control Officer's revising the permit.

407 PUBLIC PARTICIPATION:

407.1 The Control Officer shall provide public notice and an opportunity for public comment before taking any of the following actions:

a. Issuing or renewing a permit to a Non-Title V source listed in Rule 280-Fees, Section 403.1-Table A Sources of these rules;

b. Issuing a non-minor permit revision to a Non-Title V source listed in Rule 280-Fees, Section 403.1-Table A Sources of these rules;

c. Revoking and reissuing or reopening a permit to a Non-Title V source listed in Rule 280-Fees, Section 403.1-Table A Sources, Section 403.2-Table B Sources, and Section 403.3-Table C Sources of these rules; or

d. Issuing a conditional permit under Rule 120-Conditional Orders of these rules to a Non-Title V source listed in Rule 280-Fees, Section 403.1-Table A Sources, Section 403.2-Table B Sources, and Section 403.3-Table C Sources of these rules.

407.2 For sources listed in Rule 280-Fees, Section 403.1-Table A Sources, Section 403.2-Table B Sources, and Section 403.3-Table C Sources of these rules, the Control Officer shall publish, once each week, a list of all permit applications received. The list will be available to the public at the Department's main office and on the Internet. The list shall include the following information:

a. Name and address of the affected facility(ies).

b. The activity(ies) involved in each permit action.

c. A statement that any person may submit written comments on a proposed permit action no later than the deadline for submitting such comments.

d. The deadline for submitting written comments.

e. Name, address, and phone number of a person from the Department from whom additional information may be obtained.

f. The location where copies of the permit or permit revision application, the proposed permit, and all other materials available to the Control Officer that are relevant to the permit decision may be reviewed and the times during which such materials will be available for public inspection.

g. A statement if the permit or permit revision would result in the generation of emission reduction credits under A.A.C. R18-2-1204-Title 18, Chapter 2, Article 12 or the utilization of emission reduction credits under A.A.C. R18-2-1206 Title 18, Chapter 2, Article 12.

407.3 For sources listed in Rule 280-Fees, Section 403.1-Table A Sources, Section 403.2-Table B Sources, and Section 403.3-Table C Sources of these rules, the Control Officer shall publish in a newspaper, once each month, a list of all permits issued.

407.4 **Public Hearing:** The Control Officer shall hold a public hearing to receive comments on petitions for conditional orders, which would vary from requirements of the applicable implementation plan. For all other actions involving a proposed permit, the Control Officer shall hold a public hearing only upon written request. If a public hearing is requested, the Control Officer shall schedule the public hearing and publish a notice once each

week for two consecutive weeks in two newspapers of general circulation in the county where the source is or will be located and by other means if necessary to assure adequate notice to the affected public. The Control Officer shall give notice of any public hearing at least 30 days in advance of the public hearing.

407.5 At the time the Control Officer publishes the first notice under Section 407.1 of this rule, the applicant shall post a notice containing the information required in Section 407.2 of this rule at the site where the source is or may be located. Consistent with Federal, State, and local law, the posting shall be prominently placed at a location under the applicant's legal control, adjacent to the nearest public roadway, and visible to the public using the public roadway. If a public hearing is to be held, the applicant shall place an additional posting providing notice of the public hearing. Any posting shall be maintained until the public comment period is closed.

407.6 The Control Officer shall provide at least 30 days from the date of its first notice for public comment. The Control Officer shall keep a record of the commenters and the issues raised during the public participation process and shall prepare written responses to all comments received. At the time a final decision is made, the record and copies of the Control Officer's responses shall be made available to the applicant and to all commenters.

408 **AMENDMENTS TO A PERMIT:** The Control Officer may amend any Non-Title V permit annually without following Rule 200-Permit Requirements, Section 402-Permit Reopenings; Revocation And Reissuance; Termination of these rules in order to incorporate changes reflected in logs or notices filed under Section 404 of this rule. The amendment shall be effective to the anniversary date of the permit. The Control Officer shall make available to the public for any source:

408.1 A complete record of logs and notices sent to the Control Officer under Section 404 of this rule; and

408.2 Any amendments or revisions to the source's permit.

SECTION 500 - MONITORING AND RECORDS

501 **LOG RETENTION REQUIREMENT:** If a source makes a change that requires logging, then the source shall keep such log for five years from the date the source creates such log.

502 **LOG FORMAT SPECIFICATIONS:** If a source makes a change that requires logging, then the source shall perform such logging in indelible ink in a bound log book with sequentially numbered pages, or in any other form, including electronic format, if approved by the Control Officer. Each log entry shall include at least the following information:

502.1 A description of the change including:

a. A description of any process change.

b. A description of any equipment change, including both old and new equipment descriptions, model numbers, and serial numbers, or any other unique equipment number.

c. A description of any process material change.

502.2 The date and time that the change occurred.

502.3 The provision of Section 404.2 of this rule that authorizes the change to be made with logging.

502.4 The date the log entry was made and the first and last name of the person making the log entry.

503 **LOG FILING:** A copy of all logs required under Section 404.2 of this rule shall be filed with the Control Officer within 30 days after each anniversary of the permit issue date. If no changes were made at the source requiring logging, a statement to that effect shall be filed instead.

REGULATION II - PERMITS AND FEES
RULE 230
GENERAL PERMITS

INDEX

SECTION 100 - GENERAL

101 PURPOSE

102 APPLICABILITY

SECTION 200 - DEFINITIONS

201 SIMILAR IN NATURE

SECTION 300 - STANDARDS

301 RULES APPLICABLE TO A GENERAL PERMIT

302 GENERAL PERMIT DEVELOPMENT

303 APPLICATION FOR COVERAGE UNDER GENERAL PERMIT

304 PUBLIC NOTICE

305 SOURCES FOR WHICH A GENERAL PERMIT MAY NOT BE ISSUED

306 GENERAL PERMIT RENEWAL

307 RELATIONSHIP TO INDIVIDUAL PERMITS

308 GENERAL PERMIT VARIANCE FOR ANY NON-FEDERALLY ENFORCEABLE REQUIREMENT OF A PERMIT

309 GENERAL PERMIT SHIELD

310 GENERAL PERMIT APPEALS

311 REVOCATIONS OF AUTHORITY TO OPERATE

SECTION 400 - ADMINISTRATIVE REQUIREMENTS (NOT APPLICABLE)

SECTION 500 - MONITORING AND RECORDS (NOT APPLICABLE)

Adopted 11/15/93
Revised 02/15/95
Revised 06/06/07

MARICOPA COUNTY
AIR POLLUTION CONTROL REGULATIONS
REGULATION II - PERMITS AND FEES
RULE 230
GENERAL PERMITS

SECTION 100 - GENERAL

101 PURPOSE: To allow for the issuance of general permits for a facility class that contains a large number of sources that are similar in nature, have substantially similar emissions, and would be subject to the same or substantially similar requirements governing operations, emissions, monitoring, reporting, or recordkeeping.

102 APPLICABILITY: A general permit shall not be issued for affected sources except as provided in regulations promulgated by the Administrator under Title IV of the Act.

SECTION 200 - DEFINITIONS: See Rule 100-General Provisions And Definitions of these rules for definitions of terms that are used but not specifically defined in this rule. For the purpose of this rule, the following definition shall apply:

201 SIMILAR IN NATURE - Refers to facility size, processes and operating conditions.

SECTION 300 - STANDARDS

301 RULES APPLICABLE TO A GENERAL PERMIT: Unless otherwise stated, the provisions of Rule 200-Permit Requirements, Rule 210-Title V Permit Provisions, Rule 220-Non-Title V Permit Provisions, Rule 245-Continuous Source Emission Monitoring, Rule 270-Performance Tests, and Rule 400-Procedure Before The Hearing Board shall apply to general permits.

302 GENERAL PERMIT DEVELOPMENT:

302.1 The Control Officer may issue a general permit on his own or in response to a petition. At the time the Control Officer issues a general permit, the Control Officer may also establish a specific application with filing instructions for sources in the category covered by the general permit.

302.2 Any person may submit a petition to the Director or to the Control Officer requesting the issuance of a general permit for a defined class of facilities.

The petition shall propose a particular class of facilities, shall list the approximate number of facilities in the proposed class along with their size, processes and operating conditions, and shall demonstrate how the class meets the criteria for a general permit as specified in Sections 100 and 301 through 303 of this rule and in ARS §49-426(H). The Control Officer shall provide a written response to the petition within 120 days of receipt.

302.3 A general permit shall be issued or denied for classes of facilities using the same engineering technical review process that applies to permits for individual sources and following the public notice requirements of Section 304 of this rule.

302.4 A general permit shall include all of the following:

a. All elements contained in Rule 210-Title V Permit Provisions, Section 302.1-Permit Contents of these rules except Sections 302.1(b) (2) and 302.1(f).

b. The process for individual sources to apply for coverage under the general permit.

302.5 A source applying for authority to operate under a general permit shall not propose nor accept pursuant to Rule 220-Non-Title V Permit Provisions of these rules emissions limitations, controls, or other requirements that are not included in the general permit.

303 APPLICATION FOR COVERAGE UNDER GENERAL PERMIT:

303.1 Once the Control Officer has issued a general permit, any source which is a member of the class of facilities covered by the general permit may apply to the Control Officer for authority to operate under the general permit. Applicants shall complete the specific application form, or if none has been adopted, the standard application form. The specific application form shall, at a minimum, require the applicant to submit the following information:

a. Information identifying and describing the source, its processes, and operating conditions in sufficient detail to allow the Control Officer to determine qualification for and to assure compliance with the general permit.

b. A compliance plan that meets the requirements of Rule 210-Title V Permit Provisions, Section 305-Compliance Plan; Certification of these rules.

303.2 For sources required to obtain a permit under Title V of the Act, the Control Officer shall provide the Administrator with a permit application summary form and any relevant portion of the permit application and compliance plan. To the extent possible, this information shall be provided in computer readable format compatible with the Administrator's national database management system.

303.3 The Control Officer shall act on the application for coverage under the general permit as expeditiously as possible, but a final decision shall be reached within 180 days. The source may operate under the terms of its application during that time. If the application for coverage is denied, the Control Officer shall notify the source that it shall apply for an individual permit within 180 days of receipt of notice. The Control Officer may defer acting on an application under this rule, if the Control Officer has provided notice of intent to renew or not to renew the permit.

303.4 The Control Officer shall make available to the public a monthly summary of all applications received under this rule.

304 PUBLIC NOTICE:

304.1 The Control Officer shall provide public notice for any proposed general permit, for any revision of an existing general permit, and for renewal of an existing general permit.

304.2 The Control Officer shall publish notice of the proposed general permit once each week for two consecutive weeks in a newspaper of general circulation within Maricopa County. The notice shall describe the following:

a. The proposed general permit.

b. The category of sources that would be affected.

c. The air contaminants which the Control Officer expects to be emitted by a typical facility in the class and by class as a whole.

d. The Control Officer's proposed actions and effective date for the actions.

e. Locations where documents relevant to the proposed general permit will be available during normal business hours.

f. The name, address, and telephone number of a person within the Department who may be contacted for further information.

g. The address where any person may submit comments and/or request a public hearing and the date and time by which comments or public hearing request are required to be received.

h. The process by which sources may obtain authorization to operate under the general permit.

304.3 For general permits under which operation may be authorized in lieu of individual source permits issued under Rule 210-Title V Permit Provisions of these rules, the Control Officer shall give notice of the proposed general permit to each affected state at the same time that the proposed general permit goes out for public notice. The Control Officer shall provide the proposed final permit to the Administrator after public and affected state review. No Title V permit shall be issued if the Administrator properly objects to its issuance in writing within 45 days from receipt of the proposed final permit and any necessary supporting information from the Control Officer.

304.4 The Control Officer shall provide at least 30 days from the date of the first notice described in Section 304.3 of this rule for public comment.

304.5 Written comments to the Control Officer shall include the name of the person and the person's agent or attorney and shall clearly set forth reasons why the general permit should or should not be issued.

304.6 At the time a general permit is issued, the Control Officer shall make available a response to all relevant comments on the proposed permit raised during the public comment period and during any requested public hearing. The response shall specify which provisions, if any, of the proposed permit have been changed and the reason for the changes. The Control Officer shall also notify in writing any petitioner and each person who has submitted written comments on the proposed permit or requested notice of the final permit decision.

305 **SOURCES FOR WHICH A GENERAL PERMIT MAY NOT BE ISSUED:** A general permit shall not be issued to sources that are subject to case-by-case standards or requirements.

306 **GENERAL PERMIT RENEWAL:** The Control Officer shall review and may renew general permits every five years. A source's authorization to operate under a general permit shall expire when the general permit expires regardless of when the authorization began during the five year period, except as provided in Section 311.3 of this rule. In addition to the public notice required to issue a proposed general permit under Section 304 of this rule, the Control Officer shall notify in writing all sources who have been granted or who have applications pending for authorization

to operate under the general permit. The written notice shall describe the source's duty to reapply and may include requests for information required under the proposed general permit.

307 RELATIONSHIP TO INDIVIDUAL PERMITS: Any source covered under a general permit may request to be excluded from coverage by applying for an individual source permit. Coverage under the general permit shall terminate on the date the individual permit is issued.

308 GENERAL PERMIT VARIANCE FOR ANY NON-FEDERALLY ENFORCEABLE REQUIREMENT OF A PERMIT:

308.1 Where, maximum achievable control technology (MACT), as defined in Rule 370-Federal Hazardous Air Pollutant Program of these rules, or hazardous air pollutant reasonably available control technology (HAPRACT) has been established in a general permit for a source category designated pursuant to Rule 372-Maricopa County Hazardous Air Pollutants (HAPs) Program of these rules, the owner and/or operator of a source within that source category may apply for a variance from the standard by demonstrating compliance with Rule 372-Maricopa County Hazardous Air Pollutants (HAPs) Program, Section 306-Risk Management Analysis of these rules at the time the source applies for coverage under the general permit.

308.2 If the owner and/or operator makes the showing required by Rule 372-Maricopa County Hazardous Air Pollutants (HAPs) Program, Section 306-Risk Management Analysis of these rules and otherwise qualifies for the general permit, the Control Officer shall, in accordance with the procedures established pursuant to this rule, approve the application and authorize operation under a variance from the standard of the general permit.

308.3 Except as modified by the variance, the source shall comply with all conditions of the general permit.

308.4 Applications and approvals of general permit variances shall be subject to the public notice requirements of Rule 210-Title V Permit Provisions of these rules.

309 GENERAL PERMIT SHIELD: Each general permit issued under this rule shall specifically identify all federal, state, and local air pollution control requirements applicable to the source at the time the general permit is issued. The general permit shall state that compliance with the conditions of the general permit shall be deemed compliance with any applicable requirement as of the date of general permit issuance. Any permit under this rule that does not expressly state that a permit shield exists shall be presumed not to provide such a shield. Notwithstanding the above provisions, the source shall be subject to enforcement

action for operation without a permit if the source is later determined not to qualify for the conditions and terms of the general permit. A permit shield provided for a general permit shall meet all the requirements of Rule 210-Title V Permit Provisions of these rules.

310 GENERAL PERMIT APPEALS: Any person who filed a comment on a proposed general permit as provided in Section 304 of this rule may appeal the terms and conditions of a general permit, as they apply to the facility class covered under a general permit, by filing an appeal with the hearing board within ten days of issuance of the general permit.

311 REVOCATIONS OF AUTHORITY TO OPERATE:

311.1 The Control Officer may require a source authorized to operate under a general permit to apply for and to obtain an individual source permit at any time if:

a. The Control Officer has determined that the source is not in compliance with the terms and conditions of the general permit; or

b. The Control Officer has determined that the emissions from the source or facility class are significant contributors to ambient air quality standard violations which are not adequately addressed by the requirements in the general permit; or

c. The Control Officer has information which indicates that the effects on human health and the environment from the sources covered under the general permit are unacceptable.

311.2 The Control Officer shall provide written notice to all sources operating under a general permit prior to cancellation of a general permit. Such notice shall include an explanation of the basis for the proposed action. Within six months of receipt of the notice of the expiration, termination or cancellation of any general permit, sources notified shall submit an application to the Control Officer for an individual permit.

311.3 A source previously authorized to operate under a general permit may operate under the terms of the general permit until the earlier of the date it submits a complete application for an individual permit, or 180 days after receipt of the notice of expiration, termination or cancellation of any general permit.

SECTION 400 - ADMINISTRATIVE REQUIREMENTS (NOT APPLICABLE)

SECTION 500 - MONITORING AND RECORDS (NOT APPLICABLE)

REGULATION II - PERMITS AND FEES

RULE 240

PERMIT REQUIREMENTS FOR NEW MAJOR SOURCES AND MAJOR MODIFICATIONS TO EXISTING MAJOR SOURCES

INDEX

SECTION 100 - GENERAL

101 PURPOSE

102 APPLICABILITY

SECTION 200 - DEFINITIONS

201 ADVERSE IMPACT ON VISIBILITY

202 CATEGORICAL SOURCES

203 CONVENTIONAL AIR POLLUTANT

204 DISPERSION TECHNIQUE

205 GOOD ENGINEERING PRACTICE (GEP) STACK HEIGHT

206 HIGH TERRAIN

207 INNOVATIVE CONTROL TECHNOLOGY

208 LOW TERRAIN

209 LOWEST ACHIEVABLE EMISSION RATE (LAER)

210 MAJOR SOURCE

211 RECONSTRUCTION

212 RESOURCE RECOVERY PROJECT

213 SECONDARY EMISSIONS

214 SIGNIFICANCE LEVELS

SECTION 300 - STANDARDS

301 PERMIT OR PERMIT REVISION REQUIRED

302 APPLICATION COMPLETENESS

303 AIR IMPACT ANALYSIS FOR ANY GEOGRAPHICAL AREA

304 ACTION ON APPLICATION AND NOTIFICATION REQUIREMENTS

305 PERMIT REQUIREMENTS FOR SOURCES LOCATED IN NONATTAINMENT AREAS
306 OFFSET AND NET AIR QUALITY BENEFIT STANDARDS
307 SPECIAL REQUIREMENTS FOR MAJOR SOURCES OF VOC OR OXIDES OF NITROGEN IN OZONE NONATTAINMENT AREAS CLASSIFIED AS SERIOUS OR SEVERE
308 PERMIT REQUIREMENTS FOR SOURCES LOCATED IN ATTAINMENT AND UNCLASSIFIABLE AREAS
309 STACK HEIGHT LIMITATION

SECTION 400 - ADMINISTRATIVE REQUIREMENTS (NOT APPLICABLE)

SECTION 500 - MONITORING AND RECORDS

501 POLLUTANTS TO BE INCLUDED IN ANALYSIS OF AMBIENT AIR QUALITY
502 PRECONSTRUCTION AIR QUALITY MONITORING DATA
503 COMPLETE APPLICATION AIR QUALITY MONITORING DATA
504 POST-APPROVAL AIR QUALITY MONITORING DATA FOR OZONE
505 POST-CONSTRUCTION AIR QUALITY MONITORING DATA
506 OPERATIONS OF MONITORING STATIONS
507 EXCEPTIONS TO MONITORING FOR A PARTICULAR POLLUTANT
508 VISIBILITY AND AIR QUALITY IMPACT ANALYSIS
509 INNOVATIVE CONTROL TECHNOLOGY
510 AIR QUALITY MODELS
511 VISIBILITY PROTECTION

Adopted 11/15/93
Revised 02/15/95
Revised 02/07/01
Revised 05/07/03
Revised 06/06/07

MARICOPA COUNTY
AIR POLLUTION CONTROL REGULATIONS
REGULATION II - PERMITS AND FEES
RULE 240
PERMIT REQUIREMENTS FOR NEW MAJOR SOURCES AND MAJOR MODIFICATIONS TO EXISTING MAJOR SOURCES

SECTION 100 - GENERAL

101 PURPOSE: To provide an orderly procedure for the review of new major sources of conventional air pollutants and of major modifications to existing major sources of conventional air pollutants requiring permits or permit revisions.

102 APPLICABILITY: The provisions of this rule apply to new major sources of conventional air pollutants and major modifications to existing major sources of conventional air pollutants. The provisions of this rule do not apply to new sources and modifications to existing sources subject to the requirements of Rule 241-Permits For New Sources And Modifications To Existing Sources of these rules.

SECTION 200 - DEFINITIONS: See Rule 100-General Provisions And Definitions of these rules for definitions of terms that are used but not specifically defined in this rule. For the purpose of this rule, the following definitions shall apply:

201 ADVERSE IMPACT ON VISIBILITY - Visibility impairment that interferes with the management, protection, preservation, or enjoyment of visual experience of a Class I area, as determined by Rule 500-Air Quality Standards of these rules.

202 CATEGORICAL SOURCES - The following classes of sources:
Coal cleaning plants with thermal dryers;
Kraft pulp mills;
Portland cement plants;
Primary zinc smelters;
Iron and steel mills;
Primary aluminum ore reduction plants;
Primary copper smelters;
Municipal incinerators capable of charging more than 50 tons of refuse per day;
Hydrofluoric, sulfuric, or nitric acid plants;
Petroleum refineries;
Lime plants;
Phosphate rock processing plants;
Coke oven batteries;
Sulfur recovery plants;

Carbon black plants using the furnace process;
Primary lead smelters;
Fuel conversion plants;
Sintering plants;
Secondary metal production plants;
Chemical process plants;
Fossil-fuel boilers, or combinations thereof, totaling more than 250 million British thermal units (BTU) per hour heat input;
Petroleum storage and transfer units with a total storage capacity more than 300,000 barrels;
Taconite preprocessing plants;
Glass fiber processing plants;
Charcoal production plants;
Fossil fuel-fired steam electric plants and combined cycle gas turbines of more than 250 million BTU per hour rated heat input.

203 **CONVENTIONAL AIR POLLUTANT -** Any pollutant for which the Administrator has promulgated a primary or secondary national ambient air quality standard.

204 **DISPERSION TECHNIQUE -** Any technique that attempts to affect the concentration of a pollutant in the ambient air by any of the following:

204.1 Using that portion of a stack that exceeds good engineering practice stack height;

204.2 Varying the rate of emission of a pollutant according to atmospheric conditions or ambient concentrations of that pollutant; or

204.3 Increasing final exhaust gas plume rise by manipulating source process parameters, exhaust gas parameters, stack parameters, or combining exhaust gases from several existing stacks into 1 stack; or other selective handling of exhaust gas streams so as to increase the exhaust gas plume rise. This shall not include any of the following:

a. The reheating of a gas stream, following use of a pollution control system, for the purpose of returning the gas to the temperature at which it was originally discharged from the source generating the gas stream.

b. The merging of exhaust gas streams under any of the following conditions:

(1) The source owner or operator demonstrates that the source was originally designed and constructed with the merged gas streams;

(2) After July 8, 1995, such merging is part of a change in operation at the source that includes the installation of pollution controls and is accompanied by a net reduction in the allowable emissions of a pollutant, applying only to the emission limitation for that pollutant; or

(3) Before July 8, 1985, such merging was part of a change in operation at the facility that included the installation of emissions control equipment or was carried out for sound economic or engineering reasons. Where there was an increase in the emission limitation or, in the event that no emission limitation was in existence prior to the merging, an increase in the quantity of pollutants actually emitted prior to the merging, the Control Officer shall presume that merging was significantly motivated by an intent to gain emissions credit for greater dispersion. Absent a demonstration by the source, owner or operator, that merging was not significantly motivated by such intent, the Control Officer shall deny credit for the effects of such merging in calculating the allowable emissions for the source.

c. Smoke management in agricultural or silvicultural prescribed burning programs.

d. Episodic restrictions on residential woodburning and open burning.

e. Techniques that increase final exhaust gas plume rise if the resulting allowable emissions of sulfur dioxide from the source do not exceed 5,000 tons per year.

205 GOOD ENGINEERING PRACTICE (GEP) STACK HEIGHT- A stack height meeting the requirements described in Section 309 of this rule.

206 HIGH TERRAIN - Any area having an elevation of 900 feet or more above the base of the stack of a source.

207 INNOVATIVE CONTROL TECHNOLOGY - Any system of air pollution control that has not been adequately demonstrated in practice, but would have a substantial likelihood of achieving greater continuous emissions reduction than any control system in current practice or of achieving at least comparable reductions at lower cost in terms of energy, economics, or non-air quality environmental impacts.

208 LOW TERRAIN - Any area other than high terrain.

209 LOWEST ACHIEVABLE EMISSION RATE (LAER) - For any source, the more stringent rate of emissions based on 1 of the following:

209.1 The most stringent emissions limitation that is contained in the State Implementation Plan (SIP), as defined in Rule 100-General Provisions And Definitions of these rules, for the class or category of stationary source, unless the owner or operator of the proposed stationary source demonstrates that the limitations are not achievable; or

209.2 The most stringent emissions limitation that is achieved in practice by the class or category of stationary source. This limitation, when applied to a modification, means the lowest achievable emissions rate for the new or modified emissions units within the stationary source. In no event shall the application of this term permit a proposed new or modified stationary source to emit any pollutant in excess of the amount allowable under the applicable standards of performance in Rule 360-New Source Performance Standards of these rules and in 40 C.F.R. 60 and 40 C.F.R. 61.

210 MAJOR SOURCE -

210.1 Any stationary source located in a nonattainment area that emits, or has the potential to emit, 100 tons per year or more of any conventional air pollutant, except as follows:

Pollutant Emitted	Nonattainment Pollutant And Classification	Quantity Threshold Tons/Year Or More
Carbon Monoxide (CO)	CO, Serious, with stationary sources as more than 25% of source inventory	50
Volatile Organic Compounds (VOC)	Ozone, Serious	50
VOC	Ozone, Severe	25
PM_{10}	PM_{10}, Serious	70
NO_x	Ozone, Serious	50
NO_x	Ozone, Severe	25

or

210.2 Any stationary source located in an attainment or unclassifiable area that emits, or has the potential to emit, 100 tons per year or more of any conventional air pollutant if the source is classified as a Categorical Source, or 250 tons per year or more of any pollutant subject to regulation under the Act if the source is not classified as a Categorical Source; or

210.3 Any change to a minor source, except for VOC or NO_x emission increases at minor sources in serious or severe ozone nonattainment areas, that would increase its emissions to the qualifying levels in Section 210.1 or Section 210.2 of this rule;

210.4 Any change in VOC or NO_x at a minor source in serious or severe ozone nonattainment areas that would be significant as described in Section 307.2 of this rule and that would increase its emissions to the qualifying levels in Section 210.1 of this rule;

210.5 Any stationary source that emits, or has the potential to emit, five or more tons of lead per year;

210.6 Any source classified as major undergoing modification that meets the definition of reconstruction;

210.7 A major source that is major for VOCs shall be considered major for ozone; or

210.8 A major source that is major for oxides of nitrogen shall be considered major for ozone in nonattainment areas classified as marginal, moderate, serious or severe.

211 **RECONSTRUCTION -** Of sources located in nonattainment areas, reconstruction shall be presumed to have taken place if the fixed capital cost of the new components exceeds 50% of the fixed capital cost of a comparable entirely new stationary source, as determined in accordance with the provisions of 40 C.F.R. 60.15(f)(1) through (3).

212 **RESOURCE RECOVERY PROJECT -** Any facility at which solid waste is processed for the purpose of extracting, converting to energy, or otherwise separating and preparing solid waste for reuse. For the purpose of this rule, only energy conversion facilities that utilize solid waste that provides more than 50% of the heat input shall be considered a resource recovery project.

213 **SECONDARY EMISSIONS -** Emissions which are specific, well defined, quantifiable, occur as a result of the construction or operation of a major source or major modification, but do not come from the major source or major modification itself, and impact the same general area as the stationary source or modification which causes the secondary emissions. Secondary emissions include emissions from any offsite support source which would not otherwise be constructed or increase its emissions as a result of the construction or operation of the major source or major modification. Secondary emissions do not include any emissions which come directly from a mobile source, such as emissions from the tailpipe of a motor vehicle, from a train, or from a vessel.

214 **SIGNIFICANCE LEVELS -** The following ambient concentrations for the enumerated pollutants:

	Averaging Time				
Pollutant	**Annual**	**24-Hour**	**8-Hour**	**3-Hour**	**1-Hour**
SO_2	1 mg/m³	5 mg/m³		25 mg/m³	
NO_2	1 mg/m³				
CO			0.5 mg/m³		2 mg/m³
PM_{10}	1 mg/m³	5 mg/m³			

Except for the annual pollutant concentrations, exceedance of significance levels shall be deemed to occur when the ambient concentration of the above pollutant is exceeded more than once per year at any one location. If the concentration occurs at a specific location and at a time when the Arizona ambient air quality standards for the pollutant are not violated, the significance level does not apply.

SECTION 300 - STANDARDS

301 PERMIT OR PERMIT REVISION REQUIRED: No person shall commence construction of a new major source nor commence major modification of a major source without first obtaining a permit or a permit revision from the Control Officer.

302 APPLICATION COMPLETENESS: An application for a permit or a permit revision under this rule shall not be considered complete unless the application demonstrates that:

302.1 The requirements in Section 303 of this rule are met;

302.2 The more stringent of the applicable new source performance standards (NSPS) in Rule 360-New Source Performance Standards of these rules or the existing source performance standards in Regulation III-Control Of Air Contaminants of these rules are applied to the proposed new major source or major modification of a major source;

302.3 The new major source or major modification will not have an adverse impact on visibility as determined by Section 511 of this rule and will satisfy all the visibility requirements contained in Section 511 of this rule. A demonstration of the impact on visibility shall be made according to Section 508 of this rule and shall be included with the application;

302.4 All applicable provisions of Rule 200-Permit Requirements, Rule 210-Title V Permit Provisions, Rule 240-Permits For New Major Sources And Major Modifications To Existing Major Sources, Rule 245-Continuous Source Emission Monitoring, and Rule 270-Performance Tests of these rules are met;

302.5 The new major source or major modification will be in compliance with whatever emission limitation, design, equipment, work practice or operational standard, or combination thereof is applicable to the source or modification. The degree of emission limitation required for control of any pollutant under this rule shall not be affected in any manner by:

a. Stack height in excess of GEP stack height except as provided in Section 309 of this rule; or

b. Any other dispersion technique, unless implemented prior to December 31, 1970.

302.6 The new major source or major modification will not exceed the applicable standards for hazardous air pollutants contained in Rule 370-Federal Hazardous Air Pollutant Program of these rules and/or Rule 372-Maricopa County Hazardous Air Pollutants (HAPS) Program of these rules.

302.7 The new major source or major modification will not exceed the limitations, if applicable, on emission from fugitive sources contained in Rule 310-Fugitive Dust, Rule 311-Particulate Matter From Process Industries, and Rule 316-Nonmetallic Mineral Processing of these rules.

302.8 A stationary source that will emit 5 or more tons of lead per year will not violate the ambient air quality standards for lead contained in Rule 510-Air Quality Standards of these rules.

303 **AIR IMPACT ANALYSIS FOR ANY GEOGRAPHICAL AREA:** Except for assessing air quality impacts within Class I areas, the air impact analysis required to be conducted as part of a permit application shall initially consider only the geographical area located within a 50 kilometer (31 mile) radius from the point of greatest emissions for the new major source or major modification. The Control Officer, on his own initiative or upon receipt of written notice from any person, shall have the right at any time to request an enlargement of the geographical area for which an air quality impact analysis is to be performed by giving the person applying for the permit or permit revision written notice thereof, specifying the enlarged radius to be so considered. In performing an air impact analysis for any geographical area with a radius of more than 50 kilometers (31 miles), the person applying for the permit or permit revision may use monitoring or modeling data obtained from major sources having comparable emissions or having emissions which are capable of being accurately used in such demonstration and which are subjected to terrain and atmospheric stability conditions which are comparable or which may be extrapolated with reasonable accuracy for use in such demonstration.

304 **ACTION ON APPLICATION AND NOTIFICATION REQUIREMENTS:** Unless the requirement has been satisfied under these rules, the Control Officer shall comply with the following requirements:

304.1 Within 60 days after receipt of an application for a permit, of a permit revision subject to this rule, or of any addition to such application, the Control Officer shall advise the applicant of any deficiency in the application. The date of receipt of the application shall be, for the purpose of this rule, the date on which the Control Officer received all required information. The permit application shall not be deemed complete solely because the Control Officer failed to meet the requirements of this section.

304.2 In addition to Section 511 of this rule, a copy of any notice required by Section 511 of this rule shall be sent to the permit applicant, to the Administrator, and to the following officials and agencies having cognizance of the location where the proposed major source or major modification would occur:

a. The Control Officer for the county wherein the proposed or existing source that is the subject of the permit or permit revision application is located;

b. The Board Of Supervisors for the county wherein the proposed or existing source that is the subject of the permit or permit revision application is located;

c. The city or town managers of the city or town which contains, and any city or town the boundaries of which are within five miles of the location of the proposed or existing source that is the subject of the permit or permit revision application;

d. Any regional land use planning agency with authority for land use planning in the area where the proposed or existing source that is the subject of the permit or permit revision application is located; and

e. Any State, Federal Land Manager, or Indian governing body whose lands may be affected by emissions from the proposed source or modification.

304.3 The Control Officer shall take final action on the application within one year of the proper filing of the complete application. The Control Officer shall notify the applicant in writing of his approval or of his denial.

304.4 The Control Officer shall terminate a permit or permit revision issued under this rule if the proposed construction or major modification is not begun within 18 months of issuance, or if during the construction or major modification, work is suspended for more than 18 months.

304.5 Within 30 days of the issuance of any permit under this rule, the Control Officer shall submit control technology information from the permit to the Administrator for the purposes listed in Section 173(d) of the Act.

305 PERMIT REQUIREMENTS FOR SOURCES LOCATED IN NONATTAINMENT AREAS:

305.1 Except as provided in Section 305.3 through Section 305.7 of this rule, no permit or permit revision shall be issued under this rule to a person proposing to construct a new major source or proposing to make a major modification to a source located in any nonattainment area for the pollutant(s) for which the source is classified as a major source or the modification is classified as a major modification unless:

a. The person demonstrates that the new major source or the major modification will meet an emission limitation which is the lowest achievable emission rate (LAER) for that source for that specific pollutant(s). In determining LAER for a reconstructed stationary source, the provisions of 40 C.F.R. 60.15(f)(4) shall be taken into account in assessing whether a new source performance standard is applicable to such stationary source.

b. The person demonstrates that all existing major sources owned or operated by that person (or any entity controlling, controlled by, or under common control with that person) in the State are in compliance with, or are on a schedule of compliance for, all conditions contained in permits of each of the sources and all other applicable emission limitations and standards under the Act and in this rule.

c. The person demonstrates that emission reductions for the specific pollutant(s) from source(s) in existence in the allowable offset area of the new major source or major modification (whether or not under the same ownership) meet the offset and net air quality benefit requirements of Section 306 of this rule.

305.2 No permit or permit revision under this rule shall be issued to a person proposing to construct a new major source or proposing to make a major modification to a major source located in a nonattainment area unless:

a. The person performs an analysis of alternative sites, sizes, production processes and environmental control techniques for such new major source or major modification; and

b. The Control Officer determines that the analysis demonstrates that the benefits of the new major source or major modification significantly outweigh the environmental and social costs imposed as a result of its location, construction, or modification.

305.3 At such time that a particular source or modification becomes a major stationary source or major modification solely by virtue of a relaxation in

any enforceable limitation which was established after August 7, 1980, on the capacity of the source or modification otherwise to emit a pollutant, such as a restriction on hours of operation, then the requirements of this rule shall apply to the source or modification as though construction had not yet commenced on the source or modification.

305.4 Secondary emissions shall not be considered in determining the potential to emit of a new source or modification and therefore whether the new source or modification is major. However, if a new source or modification is subject to this rule on the basis of its direct emissions, a permit or a permit revision, under this rule to construct the new source or modification, shall be denied, unless the conditions specified in Section 305.1(a) and Section 305.1(b) of this rule are met, for reasonably quantifiable secondary emissions caused by the new source or modification.

305.5 A permit to construct a new source or modification shall be denied, unless the conditions specified in Section 305.1(a), Section 305.1(b), and Section 305.1(c) of this rule are met for fugitive emissions caused by the new source or modification. However, these conditions shall not apply to a new major source or major modification that would be a major source or major modification only if fugitive emissions, to the extent quantifiable, are considered in calculating the potential emissions of the source or modification, and the source is neither a categorical source nor a source belonging to the category of sources for which New Source Performance Standards (NSPS) under 40 C.F.R. Part 60 or National Emission Standards For Hazardous Air Pollutants (NESHAPS) under 40 C.F.R. Part 61 promulgated by the Administrator prior to August 7, 1980.

305.6 The requirements of Section 305.1(c) of this rule shall not apply to temporary emission sources, such as pilot plants and portable sources, which are only temporarily located in the nonattainment area, are otherwise regulated by a permit, and are in compliance with the conditions of that permit.

305.7 A decrease in actual emissions shall be considered in determining the potential of a new source or modification to emit only to the extent that the Control Officer has not relied on it in issuing any permit or permit revision under these rules, or the State has not relied on it in demonstrating attainment or reasonable further progress (RFP).

305.8 The issuance of a permit or permit revision under this rule shall not relieve the owner and/or operator of the responsibility to comply fully with applicable provisions of the State Implementation Plan (SIP) and any other requirements pursuant to local, State, or Federal law.

305.9 Within 30 days of the issuance of any permit under this section, the Control Officer shall submit control technology information from the permit to the Administrator for the purposes listed in Section 173(d) of the Act.

306 OFFSET AND NET AIR QUALITY BENEFIT STANDARDS:

306.1 Increased emissions by a major source or major modification subject to this rule shall be offset by reductions in the emissions of each pollutant for which the area has been designated as nonattainment and for which the source or modification is classified as major. The offset may be obtained by reductions in emissions from the source or modification, or from any other source within the allowable offset area. Credit for an emissions offset can be used only if it has not been relied upon in demonstrating attainment or in demonstrating reasonable further progress (RFP), and if it has not been relied upon previously in issuing a permit or permit revision under this rule, under Section 301 through Section 305 of this rule, or not otherwise required under this rule or under any provision of the State Implementation Plan (SIP).

306.2 An offset shall not be sufficient unless reductions of total emissions for the particular pollutant for which the offset is required will be:

a. Obtained from sources within the allowable offset area;

b. A surplus emission, which is an emission reduction not required by current regulations in the State Implementation Plan (SIP); not already relied upon for SIP planning purposes; and not used by the source to meet any other regulatory requirement, including, at the time emission reduction credits (ERCs) are used, reasonably available control technology (RACT), reasonable further progress (RFP), or milestones thereof, or demonstration of attainment;

c. Contemporaneous with the operation, the new major source, or major modification;

d. An emission enforceable by the Administrator;

e. A quantifiable emission. Quantification may be based on emission factors, stack tests, monitored values, operating rates and averaging times, process or production inputs, modeling or other reasonable measurement practices. Quantification methods shall be credible, workable, and replicable. The method for calculating emissions should be used to measure the emissions both before and after the changes in emission levels, both at the generator and at the user of the emission reduction credits (ERCs); and

f. Sufficient to satisfy the Control Officer that emissions from the new major source or major modification, together with the offset, will result in reasonable further progress (RFP) for that pollutant.

306.3 In ozone nonattainment areas classified as marginal, total emissions of VOC and oxides of nitrogen from other sources shall offset those proposed or permitted from the major source or major modification by a ratio of at least 1.10:1. In ozone nonattainment areas classified as moderate, total emissions of VOC and oxides of nitrogen from other sources shall offset those proposed or permitted from the major source or major modification by a ratio of at least 1.15:1. New major sources and major modifications in serious and severe ozone nonattainment areas shall comply with this section and with Section 307 of this rule.

306.4 Only intrapollutant emission offsets shall be allowed. Intrapollutant emission offsets for VOCs shall only include offset reductions in emissions of VOCs. Intrapollutant emission offsets for oxides of nitrogen shall only include offset reductions in emissions of oxides of nitrogen.

306.5 For purpose of this rule, reasonable further progress (RFP) shall mean compliance with the schedule of annual incremental reductions in emissions of the applicable air pollutant prescribed by the Control Officer based on air quality modeling under Section 510 of this rule, to provide for attainment of the applicable air quality standards by the deadlines set under Part D of Title I of the Act, or in an applicable implementation plan.

306.6 For the purpose of this rule, net air quality benefit shall mean that during similar time periods either Section 306.6(a) or Section 306.6(b) of this rule is applicable:

a. A reduction in the number of violations of the applicable Arizona ambient air quality standard within the allowable offset area has occurred and the following mathematical expression is satisfied:

$$\sum_{i=1}^{N} \frac{X_i - C}{N} \leq \sum_{j=1}^{K} \frac{X_j - C}{K}$$

when:

C = The applicable Arizona ambient air quality standard.

X_i = The concentration level of the violation at the ith receptor for the pollutant after offsets.

N = The number of violations for the pollutant after offsets ($N \leq K$).

X_j = The concentration level of the violation at the jth receptor from the pollutant before offsets.

K = The number of violations for the pollutant before offsets.

b. The average of the ambient concentrations within the allowable offset area after the implementation of the contemplated offsets will

be less than the average of the ambient concentrations within the allowable offset area without the offsets.

306.7 For the purpose of this rule, baseline shall be defined as:

a. The baseline of total emissions from any sources in existence or sources that have obtained a permit or permit revision under this rule, regardless of whether or not the sources are in actual operation at the time of application for the permit or permit revision, shall be the total actual emissions at the time the application is filed. In addition, the baseline of total emissions shall consist of all emission limitations included as conditions on federally enforceable permits, except that the offset baseline shall be the actual emissions of the source from which offset credit is obtained if:

(1) No emission limitations are applicable to a source from which offsets are being sought; or

(2) The demonstration of reasonable further progress (RFP) and attainment of ambient air quality standards is based upon the actual emissions of sources located within a designated nonattainment area.

b. If the emission limitations for a particular pollutant allow greater emissions than the potential emission rate of the source for that pollutant, the baseline shall be the potential emission rate at the time application for the permit or permit revision under this rule is filed, and emissions offset credit shall be allowed only for control below the potential emission rate.

306.8 For an existing fuel combustion source, offset credit shall be based on the allowable emissions under the regulations or permit conditions applicable to the source for the type of fuel being burned at the time the application for the permit or permit revision under this rule is filed. If an existing source commits to switch to a cleaner fuel at some future date, emissions offset credit based on the actual emissions for the fuels involved shall not be acceptable unless:

a. The permit or permit revision under this rule for the source specifically requires the use of a specified alternative control measure that would achieve the same degree of emissions reduction if the source switches back to a dirtier fuel at some later date; and

b. The source demonstrates to the satisfaction of the Control Officer that it has secured an adequate long-term supply of the cleaner fuel.

306.9 Offsets shall be made on either a pounds-per-hour, pounds-per-day, pounds-per-quarter, tons-per-quarter, or tons-per-year basis, whichever is applicable, when all sources involved in the emission offset calculations are operating at their maximum expected or allowed production rate and, except as otherwise provided in Section 306.8 of this rule, utilizing the type of fuel burned at the time the application for the permit or permit revision under this rule is filed. A tons-per-year basis shall not be used if the new or modified source or the source offsets are not expected to operate throughout the entire year. No emissions credit may be allowed for replacing one VOC with another VOC of lesser reactivity.

306.10 Emissions reductions achieved by shutting down an existing source or permanently curtailing production or operating hours below baseline levels may be credited, if the work force to be affected has been notified of the proposed shutdown or curtailment. No offset credits for shutdowns or curtailments shall be provided for emissions reductions that are necessary to bring a source into compliance with reasonably available control technology (RACT) or any other standard under an applicable implementation plan.

306.11 The allowable offset area shall be the geographical area in which the sources are located whose emissions are being sought to offset emissions from a new major source or major modification. For the pollutants sulfur dioxide, PM_{10}, and carbon monoxide, the allowable offset area shall be determined by atmospheric dispersion modeling. If the emission offsets are obtained from a source on the same premises or in the immediate vicinity of the new major source or major modification, and the pollutants disperse from substantially the same effective stack height, atmospheric dispersion modeling shall not be required. The allowable offset area for all other pollutants shall be the nonattainment areas for those pollutants within which the new major source or major modification is to be located.

306.12 An emission reduction may only be used to offset emissions if the reduced level of emissions will continue for the life of the new source or modification and if the reduced level of emissions is legally and federally enforceable at the time of permit issuance. It shall be considered legally enforceable, if the following conditions are met:

a. The emission reduction is included as a condition in the permit of the source relied upon to offset the emissions from the new major source or major modification, or in the case of reductions from sources controlled by the applicant, is included as a condition of the permit or permit revision under this rule for the new major source or major modification;

b. The emission reduction is adopted as a part of this rule or comparable rules of any other governmental entity or is

contractually enforceable by the Control Officer and is in effect at the time the permit is issued.

306.13 For the purpose of this rule, the Control Officer may initiate or a source may propose a mobile source emission reduction credit (MERC) program. "MERC Program" or "Program" means any activity undertaken by a person which generates actual mobile source emission reductions within the Maricopa County nonattainment area for purposes of establishing MERCs under this rule.

a. **Applicability:** A MERC Program applies to any owner, user, transferor, or transferee of a MERC for new source review (NSR) purposes, of a mobile source for which a MERC has been granted, and for any generator of a MERC.

b. **Limitations:**

(1) A MERC Program can be a one-time action, a series of one-time actions, or a continuous set of actions.

(2) A MERC generated by a MERC Program must create an actual emissions reduction.

(3) A MERC generated by a MERC Program is subject to the written approval of the Control Officer and the Administrator.

(4) At a minimum, a MERC, like other emission reduction credits used as NSR offsets, must meet the requirements of Section 306.2 of this rule, including being surplus, enforceable, permanent, and quantifiable.

(5) The MERC Program shall include specifications regarding:

(a) Quantification of mobile source emission credit.

(b) Life of mobile source emission credit. The life of a MERC shall be dependent on the duration of the actual emission reductions activity. For the purpose of this section, actual emission reductions mean emission reductions which occur or are projected to occur within the Maricopa County nonattainment area and which meet the requirements of Section 306.2 of this rule.

(c) Evidence of disposal of original mobile source. For the purpose of this section, disposal is not limited to scrapping a mobile source but includes relocating a

mobile source outside the Maricopa County nonattainment area.

(d) Recordkeeping and reporting.

c. Inspections And Recordkeeping:

(1) Any owner, user, transferor, or transferee of a MERC for new source review (NSR) purposes, of a mobile source for which a MERC has been granted, or any generator of a MERC shall compile and retain, for five years beyond the credit life (if the credit has a limited life), all records reasonably necessary to verify compliance with the requirements of this rule and with any other requirements imposed under the granting or use of the MERC. The Control Officer shall determine what records are "reasonably necessary" and, prior to the MERC-generating activity taking place, shall approve a written document, which describes these requirements. Records may be maintained in an electronic format, if compatible with existing Department computer equipment, as determined by the Control Officer.

(2) Access to and copies of all applicable records, for inspection, shall be provided to the Control Officer upon request.

(3) Any owner, user, transferor, or transferee of a MERC for new source review (NSR) purposes, of a mobile source for which a MERC has been granted, or any generator of a MERC, is subject to random inspections by the Control Officer to verify compliance with this rule and any other requirements imposed under the granting or use of the MERC.

(4) The Control Officer shall, upon request, have access to the premises of any owner, user, transferor, or transferee of a MERC for new source review (NSR) purposes, of any mobile source for which a MERC has been granted, or any generator of a MERC, for purposes of conducting an inspection to verify compliance with this rule and with any other requirements imposed under the granting or use of the MERC.

(5) Inspections may include review of records, testing, or any other action to verify compliance with this rule and with any other requirements imposed under the granting or use of the MERC.

307 SPECIAL REQUIREMENTS FOR MAJOR SOURCES OF VOC OR OXIDES OF NITROGEN IN OZONE NONATTAINMENT AREAS CLASSIFIED AS SERIOUS OR SEVERE:

307.1 The provisions of Section 307 of this rule only apply to stationary sources of VOC or oxides of nitrogen in ozone nonattainment areas classified as serious or severe. Unless otherwise provided in this rule, all requirements of Rule 200-Permit Requirements, Rule 210-Title V Permit Provisions, Rule 240-Permits For New Major Sources And Major Modifications To Existing Major Sources, Rule 245-Continuous Source Emission Monitoring, and Rule 270-Performance Tests of these rules apply.

307.2 Significant means, for the purposes of a major modification of any major source of VOC or oxides of nitrogen or for determining whether an otherwise minor source is major under Section 210-Definition Of Major Source of this rule, any physical change or change in the method of operations that results in net increases in emissions of either pollutant by more than 25 tons when aggregated with all other creditable increases and decreases in emissions from the source over the previous five consecutive calendar years, including the calendar year in which the increase is proposed. For the purpose of Section 307 of this rule, a physical change or change in the method of operation that results in an increase of less than one ton per year of VOC or oxides of nitrogen before netting does not trigger a 5-year aggregation exercise.

307.3 For any major source that emits or has the potential to emit less than 100 tons VOC or oxides of nitrogen per year, a significant increase in VOC or oxides of nitrogen, respectively, shall constitute a major modification, except that the increase in emissions from any discrete emissions unit, operation, or other pollutant emitting activity that is offset from other units, operations, or activities at the source at a ratio of 1.3:1 for the increase in VOC or oxides of nitrogen, respectively, from the unit, operation, or activity shall not be considered part of the major modification. Best available control technology (BACT) shall be substituted for lowest achievable emission rate (LAER) for all major modifications under this section. Net emissions increases in VOC or oxides of nitrogen above the internal offset described herein shall be subject to the offset requirements in Section 307.5 and Section 307.6 of this rule.

307.4 For any stationary source that emits or has the potential to emit 100 tons or more of VOC or oxides of nitrogen per year, any significant increase in VOC or oxides of nitrogen, respectively, shall constitute a major modification. If the increase in emissions from the modification at any discrete emissions

unit, operation, or other pollutant emitting activity is offset from other units, operations or activities at the source at a ratio of 1.3:1 for the increase in VOC or oxides of nitrogen, respectively from the unit, operation or activity, best available control technology (BACT) shall be substituted for lowest achievable emission rate (LAER) at the unit, operation, or activity. Net emissions increases in VOC or oxides of nitrogen above the internal offset described herein shall be subject to the offset requirements in Section 307.5 and Section 307.6 of this rule.

307.5 For any new major source or major modification that is classified major because of emissions or potential to emit VOC or oxides of nitrogen in an ozone nonattainment area classified as serious, the increase in emissions of these pollutants from the source or modification shall be offset at a ratio of 1.2:1. The offset shall be made in accordance with the provisions of Section 306 of this rule.

307.6 For any new major source or major modification that is classified as such because of emissions or potential to emit VOC or oxides of nitrogen in an ozone nonattainment area classified as severe, the increase in emissions of these pollutants from the source or modification shall be offset at a ratio of 1.3:1. If the State Implementation Plan (SIP) requires all existing major sources of these pollutants in the nonattainment area to apply best available control technology (BACT), then the offset ratio shall be 1.2:1. These offsets shall be made in accordance with the provisions of Section 306 of this rule.

308 PERMIT REQUIREMENTS FOR SOURCES LOCATED IN ATTAINMENT AND UNCLASSIFIABLE AREAS:

308.1 Except as provided in Section 308.2 through Section 308.7 and Section 509 of this rule, no permit or permit revision under this rule shall be issued to a person proposing to construct a new major source or proposing to make a major modification to a major source that would be constructed in an area designated as attainment or unclassifiable for any pollutant, unless the source or modification meets the following conditions:

a. A new major source shall apply best available control technology (BACT) for each pollutant listed in Rule 100-General Provisions And Definitions of these rules for which the potential to emit is significant.

b. A major modification shall apply best available control technology (BACT) for each pollutant listed in Rule 100-General Provisions And Definitions of these rules for which the modification would result in a significant net emissions increase at the source. This requirement applies to each proposed emissions unit at which a net emissions increase in the pollutant would occur as a r esult of a physical change or of a change in the method of operation in the unit.

c. For phased construction projects, the determination of best available control technology (BACT) shall be reviewed and modified as appropriate at the latest reasonable time which occurs no later than 18 months prior to commencement of construction of each independent phase of the project. At such time, the owner or operator of the applicable stationary source may be required to demonstrate the adequacy of any previous determination of best available control technology (BACT) for the source.

d. Best available control technology (BACT) shall be determined on a case-by-case basis and may constitute application of production processes or available methods, systems, and techniques, including fuel cleaning or treatment, clean fuels, or innovative fuel combustion techniques, for control of such pollutant. In no event shall such application of best available control technology (BACT) result in emissions of any pollutant which would exceed the emissions allowed by any applicable new source performance standard or national emission standard for hazardous air pollutants under Rule 360-New Source Performance Standards, Rule 370-Federal Hazardous Air Pollutant Program, and Rule 372-Maricopa County Hazardous Air Pollutants (HAPS) Program of these rules. If the Control Officer determines that technological or economic limitations on the application of measurement methodology to a particular emissions unit would make the imposition of an emissions standard infeasible, a design, equipment, work practice, operational standard or combination thereof may be prescribed instead to satisfy the requirement for the application of best available control technology (BACT). Such standard shall, to the degree possible, set forth the emissions reduction achievable by implementation of such design, equipment, work practice or operation, and shall provide for compliance by means which achieve equivalent results.

e. The person applying for the permit or permit revision under this rule performs an air impact analysis and monitoring as specified in Section 500 of this rule and such analysis demonstrates that allowable emission increases from the proposed new major source or major modification, in conjunction with all other applicable emission increases or reductions, including secondary emissions, for all pollutants listed in Rule 500-Attainment Area Classification of these rules, and minor and mobile sources for oxides of nitrogen:

(1) Would not cause nor contribute to an increase in concentrations of any pollutant by an amount in excess of any applicable maximum allowable increase over the baseline concentration in Rule 500-Attainment Area Classification of these rules for any attainment or unclassified area; or

(2) Would not cause nor contribute to an increase in ambient concentrations for a pollutant by an amount in excess of the significance level for such pollutant in any adjacent area in which Arizona primary or secondary ambient air quality standards for that pollutant are being violated. A new major source of volatile organic compounds (VOCs) or oxides of nitrogen, or a major modification to a major source of VOCs or oxides of nitrogen, shall be presumed to contribute to violations of the Arizona ambient air quality standards for ozone if it will be located within 50 kilometers (31 miles) of a nonattainment area for ozone. The presumption may be rebutted for a new major source or major modification if it can be satisfactorily demonstrated to the Control Officer that emissions of VOCs or oxides of nitrogen from the new major source or major modification will not contribute to violations of the Arizona ambient air quality standards for ozone in adjacent nonattainment areas for ozone. Such a demonstration shall include a showing that topographical, meteorological or other physical factors in the vicinity of the new major source or major modification are such that transport of VOCs emitted from the source are not expected to contribute to violations of the ozone standards in the adjacent nonattainment areas.

f. Air quality models:

(1) All estimates of ambient concentrations required under this rule shall be based on the applicable air quality models, data basis, and other requirements specified in 40 C.F.R. 51, Appendix W, "Guideline On Air Quality Models", as of July 1, 2004 (and no future amendments or additions), which shall be referred to hereinafter as "Guideline" and is adopted by reference.

(2) Where an air quality impact model specified in the Guideline is inappropriate, the model may be modified or another model substituted. Such a change is subject to notice and opportunity for public comment. Written approval of the Administrator shall be obtained for any modification or substitution.

308.2 The requirements of this section shall not apply to a new major source or major modification to a source with respect to a particular pollutant if the person applying for the permit or permit revision under this rule demonstrates that, as to that pollutant, the source or modification is located in an area designated as nonattainment for the pollutant.

308.3 The requirements of this section shall not apply to a new major source or major modification of a source if such source or modification would be a major source or major modification only if fugitive emissions, to the extent quantifiable, are considered in calculating the potential emissions of the source or modification, and the source is not either among the Categorical Sources listed in Section 202 of this rule or belongs to the category of sources for which New Source Performance Standards (NSPS) under 40 C.F.R. Part 60 or National Emission Standards For Hazardous Air Pollutants (NESHAPS) under 40 C.F.R. Part 61, promulgated by the Administrator prior to August 7, 1980.

308.4 The requirements of this section shall not apply to a new major source or major modification to a source when the owner of such source is a nonprofit health or educational institution.

308.5 The requirements of this section shall not apply to a portable source which would otherwise be a new major source or major modification to an existing source if such portable source is temporary, is under a permit or permit revision issued under this rule, is in compliance with the conditions of that permit or permit revision under this rule, the emissions from the source will not impact a Class I area nor an area where an applicable increment is known to be violated, and reasonable notice is given to the Control Officer prior to the relocation identifying the proposed new location and the probable duration of operation at the new location. Such notice shall be given to the Control Officer not less than 10 calendar days in advance of the proposed relocation unless a different time duration is previously approved by the Control Officer.

308.6 Special Requirements Applicable To Federal Land Managers:

a. Notwithstanding any other provision of this rule, a Federal Land Manager may present to the Control Officer a demonstration that the emissions attributed to such new major source or major modification to a source will have significant adverse impact on visibility or other specifically defined air quality related values of any Federal Mandatory area designated in Rule 500-Attainment Area Classification of these rules, regardless of the fact that the change in air quality resulting from emissions attributable to such new major source or major modification to a source in existence will not cause or contribute to concentrations which exceed the maximum allowable increases for a Class I area. If the Control Officer concurs

with such demonstrations, the permit or permit revision under this rule shall be denied.

b. If the owner or operator of a proposed new major source or a source for which major modification is proposed demonstrates to the Federal Land Manager that the emissions attributable to such major source or major modification will have no significant adverse impact on the visibility or other specifically defined air quality related values of such areas and the Federal Land Manager so certifies to the Control Officer, the Control Officer may issue a permit or permit revision under this rule notwithstanding the fact that the change in air quality resulting from emissions attributable to such new major source or major modification will cause or contribute to concentrations which exceed the maximum allowable increases for a Class I area. Such a permit or permit revision under this rule shall require that such new major source or major modification comply with such emission limitations as may be necessary to assure that emissions will not cause increases in ambient concentrations greater than the following maximum allowable increases over baseline concentrations for such pollutants:

Maximum Allowable Increases		
Pollutant	**Averaging Time**	**Increase In mg/m^3**
TSP	Annual Geometric Mean	19
TSP	24-hour Maximum	37
SO_2	Annual Arithmetic Mean	20
SO_2	24-hour Maximum	91
SO_2	3-hour Maximum	325
NO_2	Annual Arithmetic Mean	25

308.7 The issuance of a permit or permit revision under this rule in accordance with this section shall not relieve the owner or operator of the responsibility to comply fully with applicable provisions of the State Implementation Plan (SIP) and any other requirements under local, State, or Federal law.

308.8 At such time that a particular source or modification becomes a major source or major modification solely by virtue of a relaxation in any enforceable limitation which was established after August 7, 1980, on the capacity of the source or modification otherwise to emit a pollutant, such as a restriction on hours of operation, then the requirements of this rule

shall apply to the source or modification as though construction had not yet commenced on the source or modification.

309 STACK HEIGHT LIMITATION:

309.1 The limitations set forth herein shall not apply to stacks or dispersion techniques used by the owner or operator prior to December 31, 1970, for which the owner or operator had:

a. Begun, or caused to begin, a continuous program of physical on-site construction of the stack;

b. Entered into building agreements or contractual obligations, which could not be canceled or modified without substantial loss to the owner or operator, to undertake a program of construction of the stack to be completed in a reasonable time; or

c. Coal fired steam electric generating units, subject to the provisions of Section 118 of the Act which commenced operation before July 1, 1975, with stacks constructed under a construction contract awarded before February 8, 1974.

309.2 Good engineering practice (GEP) stack height is calculated as the greater of the following four numbers:

a. 65 meters (213.25 feet).

b. For stacks in existence on January 12, 1979, and for which the owner or operator had obtained all applicable preconstruction permits or approvals required under 40 C.F.R. Parts 51 and 52 and Section 305 of this rule, Hg = 2.5H.

c. For all other stacks, Hg = H + 1.5L, where:
Hg = good engineering practice stack height, measured from the ground-level elevation at the base of the stack;
H = height of nearby structure measured from the ground-level elevation at the base of the stack;
L = lesser dimension (height or projected width) of nearby structure;
provided that the EPA, the Director, or the Control Officer may require the use of a field study or fluid model to verify good engineering practice (GEP) stack height for the source; or

d. The height demonstrated by a fluid model or a field study approved by the reviewing agency, which ensures that the emissions from a stack do not result in excessive concentrations of any air pollutant as a result of atmospheric downwash, wakes, or eddy effects created by the source itself, nearby structures, or nearby terrain obstacles.

e. For a specific structure or terrain feature, "nearby" shall be:

(1) For purposes of applying the formulae in Section 309.2(b) of this rule and Section 309.2(c) of this rule, that distance up to five times the lesser of the height or the width dimension of a structure but not greater than 0.8 km (one-half mile).

(2) For conducting demonstrations under Section 309.2(d) of this rule, means not greater than 0.8 km (one-half mile). An exception is that the portion of a terrain feature may be considered to be nearby which falls within a distance of up to 10 times the maximum height (H+) of the feature, not to exceed two miles if such feature achieved a height (H+) 0.8 km from the stack. The height shall be at least 40% of the good engineering practice (GEP) stack height determined by the formula provided in Section 309.2(c) of this rule, or 85 feet (26 meters), whichever is greater, as measured from the ground-level elevation at the base of the stack.

f. "Excessive concentrations" means, for the purpose of determining good engineering practice stack height under Section 309.2(d) of this rule:

(1) For sources seeking credit for stack height exceeding that established under Sections 309.2(b) and 309.2(c) of this rule, a maximum ground-level concentration due to emissions from a s tack due in whole or in part to downwash, wakes, and eddy effects produced by nearby structures or nearby terrain features which individually is at least 40% in excess of the maximum concentration experienced in the absence of such downwash, wakes, or eddy effects and which contributes to a total concentration due to emissions from all sources that is greater than an ambient air quality standard. For sources subject to the requirements for permits or permit revisions under this rule, an excessive concentration alternatively means a maximum ground-level concentration due to emissions from a stack due in whole or part to downwash, wakes or eddy effects produced by nearby structures or nearby

terrain features which individually is at least 40% in excess of the maximum concentration experienced in the absence of such downwash, wakes or eddy effects and greater than the applicable maximum allowable increase contained in Rule 500-Attainment Area Classification of these rules. The allowable emission rate to be used in making demonstrations under Section 309.2(d) of this rule shall be prescribed by the new source performance standard (NSPS) which is applicable to the source category, unless the owner or operator demonstrates that this emission rate is infeasible. Where such demonstrations are approved by the Control Officer, an alternative emission rate shall be established in consultation with the source owner or operator.

(2) For sources seeking credit after October 11, 1983, for increases in existing stack heights up to the heights established under Sections 309.2(b) and 309.2(c) of this rule, either:

(a) A maximum ground-level concentration due in whole or in part to downwash, wakes, or eddy effects as provided in Section 309.2(f)(1) of this rule, except that emission rate specified by any applicable State Implementation Plan (SIP) shall be used, or

(b) The actual presence of a local nuisance caused by the existing stack, as determined by the Control Officer; and

(3) For sources seeking credit after January 12, 1979, for a stack height determined under Sections 309.2(b) and 309.2(c) of this rule, where the Control Officer requires the use of a field study or fluid model to verify good engineering practice (GEP) stack height, for sources seeking stack height credit after November 9, 1984, based on the aerodynamic influence of cooling towers, and for sources seeking stack height credit after December 31, 1970, based on the aerodynamic influence of structures not adequately represented by the equations in Sections 309.2(b) and 309.2(c) of this rule, a maximum ground-level concentration due in whole or in part to downwash, wakes, or eddy effects that is at least 40% in excess of the maximum concentration experienced in the absence of such downwash, wakes, or eddy effects.

309.3 The degree of emission limitation required of any source after the respective date given in Section 309.1 of this rule for control of any pollutant shall not be affected by so much of any source's stack height that exceeds good engineering practice or by any other dispersion technique.

309.4 The good engineering practice (GEP) stack height for any source seeking credit because of plume impaction which results in concentrations in violation of national ambient air quality standards or applicable prevention of significant deterioration (PSD) increments can be adjusted by determining the stack height necessary to predict the same maximum air pollutant concentration on any elevated terrain feature as the maximum concentration associated with the emission limit which results from modeling the source using the good engineering practice (GEP) stack height as determined herein and assuming the elevated terrain features to be equal in elevation to the good engineering practice (GEP) stack height. If this adjusted good engineering practice (GEP) stack height is greater than stack height the source proposes to use, the source's emission limitation and air quality impact shall be determined using the proposed stack height and the actual terrain heights.

309.5 Before the Control Officer issues a permit or permit revision under this rule to a source based on a good engineering practice (GEP) stack height that exceeds the height allowed by Section 309.2 of this rule, the Control Officer shall notify the public of the availability of the demonstration study and provide opportunity for a public hearing in accordance with the requirements of Rule 210-Title V Permit Provisions of these rules.

SECTION 400 - ADMINISTRATIVE REQUIREMENTS (NOT APPLICABLE)

SECTION 500 - MONITORING AND RECORDS

501 POLLUTANTS TO BE INCLUDED IN ANALYSIS OF AMBIENT AIR QUALITY: Any application for a permit or permit revision under this rule to construct a new major source or major modification to a major source shall contain for each of the following pollutants an analysis of ambient air quality in the area that the new major source or major modification would affect:

501.1 For the new source, each pollutant that it would have the potential to emit in a significant amount.

501.2 For the modification, each pollutant for which it would result in a significant net emissions increase.

502 PRECONSTRUCTION AIR QUALITY MONITORING DATA:

502.1 With respect to any such pollutant for which no national ambient air quality standard exists, the analysis shall contain all air quality monitoring data as the Control Officer determines is necessary to assess ambient air quality for that pollutant in any area that the emissions of the pollutant would affect.

502.2 With respect to any such pollutant, other than nonmethane hydrocarbons, for which a national ambient air quality standard does exist, the analysis shall contain continuous air quality monitoring data gathered for purposes of determining whether emissions of that pollutant would cause or contribute to a violation of such standard or of any maximum allowable increase.

502.3 In general, the continuous air quality monitoring data that is required shall have been gathered over a period of at least one year and shall represent at least the year preceding receipt of the application, except that if the Control Officer determines that a c omplete and adequate analysis can be accomplished with continuous air quality monitoring data gathered over a period shorter than one year, but not to be less than four months, the data that is required shall have been gathered over at least that shorter period.

503 COMPLETE APPLICATION AIR QUALITY MONITORING DATA: For any application which, prior to February 9, 1982, becomes complete, except as to the requirements of Section 502.2 of this rule, the data that Section 502.2 of this rule requires shall have been gathered over at least the period from February 9, 1981, to the date the application becomes otherwise complete, except that:

503.1 If the new source or modification would have been major for that pollutant under Section 308 of this rule as in effect on October 2, 1979, any monitoring data shall have been gathered over at least the period required by Section 308 of this rule.

503.2 If the Control Officer determines that a complete and adequate analysis can be accomplished with monitoring data over a shorter period (not to be less than four months), the data that Section 502.2 of this rule requires shall have been gathered over that shorter period.

503.3 If the monitoring data would relate exclusively to ozone and would not have been required under Section 308 of this rule as in effect on October 2, 1979, the Control Officer may waive the otherwise applicable requirements of Section 308 of this rule to the extent that the applicant shows that the monitoring data would be unrepresentative of air quality over the full year.

504 POST-APPROVAL AIR QUALITY MONITORING DATA FOR OZONE: The owner or operator of a proposed stationary source or modification to a source of VOCs who satisfies all conditions of 40 C.F.R. 51, Appendix S, Section IV, may provide post-approval monitoring data for ozone in lieu of providing preconstruction data as required under Section 502 of this rule.

505 POST-CONSTRUCTION AIR QUALITY MONITORING DATA: The owner or operator of a new major source or major modification shall, after construction of the source or modification, conduct such ambient monitoring as the Control Officer determines is necessary to determine the effect emissions from the new source or modification may have, or are having, on air quality in any area.

506 OPERATIONS OF MONITORING STATIONS: The owner or operator of a new major source or major modification shall meet the requirements of 40 C.F.R. 58, Appendix B, during the operation of monitoring stations for purposes of satisfying Section 502 through Section 505 of this rule.

507 EXCEPTIONS TO MONITORING FOR A PARTICULAR POLLUTANT: The requirements of Section 502 through Section 506 of this rule shall not apply to a new major source or major modification to an existing source with respect to monitoring for a particular pollutant if:

507.1 The emissions increase of the pollutant from the new source or the net emissions increase of the pollutant from the modification would cause, in any area, air quality impacts less than the following amounts:

Pollutant	Concentration	Averaging Time
Carbon Monoxide	575 mg/m^3	8 hour average
Nitrogen dioxide	14 mg/m^3	annual average
PM_{10}	10 mg/m^3	24 hour average
Sulfur dioxide	13 mg/m^3	24 hour average
Lead	0.1 mg/m^3	24 hour average
Fluorides	0.25 mg/m^3	24 hour average
Total reduced sulfur	10 mg/m^3	1 hour average
Hydrogen sulfide	0.04 mg/m^3	1 hour average
Reduced sulfur compounds	10 mg/m^3	1 hour average
Ozone	Increased emissions of less than 100 tons per year of volatile organic compounds or oxides of nitrogen	

or,

507.2 The concentrations of the pollutant in the area that the new source or modification would affect are less than the concentrations listed in Section 507.1 of this rule.

508 VISIBILITY AND AIR QUALITY IMPACT ANALYSIS: Any application for a permit or a permit revision under this rule to construct a new major source or major modification to a source shall contain:

508.1 An analysis of the impairment to visibility, soils and vegetation that would occur as a result of the new source or modification and general commercial, residential, industrial and other growth associated with the new source or modification. The applicant need not provide an analysis of the impact on vegetation having no significant commercial or recreational value.

508.2 An analysis of the air quality impact projected for the area as a result of general commercial, residential, industrial and other growth associated with the new source or modification.

509 INNOVATIVE CONTROL TECHNOLOGY:

509.1 Notwithstanding the provisions of Sections 308.1(a), 308.1(b), and 308.1(c), of this rule, the owner or operator of a proposed new major source or major modification may request that the Control Officer approve a system of innovative control technology rather than the best available control technology (BACT) requirements otherwise applicable to the new source or modification.

509.2 The Control Officer shall approve the installation of a system of innovative control technology if the following conditions are met:

a. The owner or operator of the proposed source or modification satisfactorily demonstrates that the proposed control system would not cause or contribute to an unreasonable risk to public health, welfare, or safety in its operation or function;

b. The owner or operator agrees to achieve a level of continuous emissions reduction equivalent to that which would have been required under Section 308.1(b) of this rule by a date specified in the permit or permit revision under this rule for the source. Such date shall not be later than four years from the time of start-up or seven years from the issuance of a permit or permit revision under this rule;

c. The source or modification would meet requirements equivalent to those in Section 308.1 of this rule based on the emissions rate that the stationary source employing the system of innovative control technology would be required to meet on the date specified in the permit or permit revision under this rule;

d. Before the date specified in the permit or permit revision under this rule, the source or modification would not:

(1) Cause or contribute to any violation of an applicable State ambient air quality standard; or

(2) Impact any area where an applicable increment is known to be violated.

e. All other applicable requirements, including those for public participation have been met.

f. The Control Officer receives the consent of the governors of other affected states.

g. The limits on pollutants contained in Rule 500-Attainment Area Classification of these rules for Class I areas will be met for all periods during the life of the source or modification.

509.3 The Control Officer shall withdraw any approval to employ a system of innovative control technology made under this rule if:

a. The proposed system fails by the specified date to achieve the required continuous emissions reduction rate; or

b. The proposed system fails before the specified date, so as to contribute to an unreasonable risk to public health, welfare, or safety; or

c. The Control Officer decides at any time that the proposed system is unlikely to achieve the required level of control or to protect the public health, welfare, or safety.

509.4 If the new source or major modification fails to meet the required level of continuous emissions reduction within the specified time period, or if the approval is withdrawn in accordance with Section 509.3 of this rule, the Control Officer may allow the owner or operator of the source or modification up to an additional three years to meet the requirement for the application of best available control technology (BACT) through use of a demonstrated system of control.

510 AIR QUALITY MODELS:

510.1 Where the Control Officer requires a person requesting a permit or permit revision under this rule to perform air quality impact modeling to obtain such permit or permit revision under this rule, the modeling shall be performed in a manner consistent with the Guideline.

510.2 Where the person requesting a permit or permit revision under this rule can demonstrate that an air quality impact model specified in the Guideline is inappropriate, the model may be modified or another model substituted. However, before such modification or substitution can occur, the Control Officer must make a written finding that:

a. No model in the Guideline is appropriate for a particular permit or permit revision under this rule under consideration; or

b. The data base required for the appropriate model in the Guideline is not available; and

c. The model proposed as a substitute or modification is likely to produce results equal or superior to those obtained by models in the Guideline; and

d. The model proposed as a substitute or modification has been approved by the Administrator.

510.3 Use of a modified or substituted model under this rule shall be subject to notice and opportunity for public comment under Rule 210-Title V Permit Provisions of these rules.

511 VISIBILITY PROTECTION:

511.1 For any new major source or major modification subject to the provisions of this rule, no permit or permit revision under this rule shall be issued to a person proposing to construct or to modify the source, unless the applicant has provided:

a. An analysis of the anticipated impacts of the proposed source on visibility in any Class I areas which may be affected by the emissions from that source; and

b. Results of monitoring of visibility in any area near the proposed source for such purposes and by such means as the Control Officer determines is necessary and appropriate.

511.2 A determination of an adverse impact on visibility shall be made based on consideration of all of the following factors:

a. The times of visitor use of the area.

b. The frequency and timing of natural conditions in the area that reduce visibility.

c. All of the following visibility impairment characteristics:

(1) Geographic extent;

(2) Intensity;

(3) Duration;

(4) Frequency; and

(5) Time of day.

d. The correlation between the characteristics listed in Section 511.2(c) of this rule and the factors described in Sections 511.2(a) and 511.2(b) of this rule.

511.3 The Control Officer shall not issue a permit or a permit revision under this rule, or pursuant to Rule 200-Permit Requirements, Rule 210-Title V Permit Provisions, Rule 245-Continuous Source Emission Monitoring, and Rule 270-Performance Tests of these rules, for any new major source or major modification subject to this rule, unless the following requirements have been met:

a. The Control Officer shall notify the individuals identified in Section 511.3(b) of this rule within 30 days of receipt of any advance notification of any such permit application or permit revision application under this rule.

b. Within 30 days of receipt of an application for a permit or permit revision under this rule for a source whose emissions may affect a Class I area, the Control Officer shall provide written notification of the application to the Federal Land Manager and to the federal official charged with direct responsibility for management of any lands within any such area. The notice shall:

(1) Include a copy of all information relevant to the permit application or to the permit revision application under this rule;

(2) Include an analysis of the anticipated impacts of the proposed source on visibility in any area which may be affected by emissions from the source; and

(3) Provide for no less than a 30 day period within which written comments may be submitted.

c. The Control Officer shall consider any analysis provided by the Federal Land Manager that is received within the comment period provided in Section 511.3(b) of this rule.

(1) Where the Control Officer finds that the analysis provided by the Federal Land Manager does not demonstrate to the satisfaction of the Control Officer that an adverse impact on visibility will result in the area, the Control Officer shall, within the public notice required by Rule 210-Title V Permit Provisions of these rules, either explain the decision or specify where the explanation can be obtained.

(2) When the Control Officer finds that the analysis provided by the Federal Land Manager demonstrates to the satisfaction of the Control Officer that an adverse impact on visibility will result in the area, the Control Officer shall not issue a permit or permit revision under this rule for the proposed new major source or major modification.

d. When the proposed permit decision is made under Rule 210-Title V Permit Provisions of these rules and available for public review, the Control Officer shall provide the individuals identified in Section 511.3(b) of this rule with a copy of the proposed permit decision and shall make available to them any materials used in making that determination.

REGULATION II - PERMITS AND FEES

RULE 241
PERMITS FOR NEW SOURCES AND MODIFICATIONS TO EXISTING SOURCES

INDEX

SECTION 100 - GENERAL

101 PURPOSE

102 APPLICABILITY

SECTION 200 - DEFINITIONS (NOT INCLUDED)

SECTION 300 - STANDARDS

301 BEST AVAILABLE CONTROL TECHNOLOGY (BACT) REQUIRED

302 REASONABLY AVAILABLE CONTROL TECHNOLOGY (RACT) REQUIRED

303 CIRCUMVENTION

SECTION 400 - ADMINISTRATIVE REQUIREMENTS (NOT INCLUDED)

SECTION 500 - MONITORING AND RECORDS (NOT INCLUDED)

Adopted 11/15/93
Revised 06/19/96

MARICOPA COUNTY
AIR POLLUTION CONTROL REGULATIONS

REGULATION II - PERMITS AND FEES

RULE 241
PERMITS FOR NEW SOURCES AND MODIFICATIONS TO EXISTING SOURCES

SECTION 100 - GENERAL

101 PURPOSE: To provide control technology requirements for new sources and modifications to existing sources of air pollution requiring permits or permit revisions.

102 APPLICABILITY: The provisions of this rule shall not apply to new major sources and major modifications to existing major sources subject to the requirements of Rule 240 of these rules.

SECTION 300 - STANDARDS

301 BEST AVAILABLE CONTROL TECHNOLOGY (BACT) REQUIRED: An applicant for a permit or permit revision subject to Rules 210, 220, or 230 of these rules shall apply BACT for each pollutant emitted which exceeds any of the threshold limits set forth in any one of the following criteria:

301.1 Any new stationary source which emits more than 150 lbs/day or 25 tons/yr of volatile organic compounds, nitrogen oxides, sulfur dioxide, or particulate matter; more than 85 lbs/day or 15 tons/yr of PM10; or more than 550 lbs/day or 100 tons/yr of carbon monoxide.

301.2 Any modified stationary source if the modification causes an increase in emissions on any single day of more than 150 lbs/day or 25 tons/yr of volatile organic compounds, nitrogen oxides, sulfur dioxide or particulate matter; more than 85 lbs/day or 15 tons/yr of PM10; or more than 550 lbs/day or 100 tons/yr of carbon monoxide. BACT is only required for the sources or group of sources being modified.

302 REASONABLY AVAILABLE CONTROL TECHNOLOGY (RACT) REQUIRED: An applicant for a permit or permit revision for a new or modified stationary source which emits or causes an increase in emissions of up to 150 lbs/day or 25 tons/yr of volatile organic compounds, or particulate matter; up to 85 lbs/day or 15 tons/yr of PM10; or up to 550 lbs/day or 100 tons/yr of carbon monoxide shall apply RACT for each pollutant emitted from said new or modified stationary source.

303 CIRCUMVENTION: The submission of applications for permits or permit revisions for new or modified sources in phases so as to circumvent the requirements of this section is prohibited. The burden of proof to show that an application for a permit or permit revision is not being submitted as a phase of a larger project shall be upon the applicant. A person shall not build, erect, install, or use any article, machine, equipment, condition, or any contrivance, the use of which, without resulting in a reduction in the total release of air contaminants to the atmosphere, conceals or dilutes an emission which would otherwise constitute a violation of this section. A person shall not circumvent this section to dilute air contaminants by using more emission openings than is considered normal practice by the industry or by the activity in question.

REGULATION II – PERMITS AND FEES

RULE 242

EMISSION OFFSETS GENERATED BY THE VOLUNTARY PAVING OF UNPAVED ROADS

INDEX

SECTION 100 – GENERAL

101 PURPOSE

102 APPLICABILITY

SECTION 200 – DEFINITIONS

201 EMISSION OFFSETS

202 ENFORCEABLE

203 PERMANENT

204 QUANTIFIABLE

205 ROADWAY SEGMENT

206 SURPLUS

SECTION 300 – STANDARDS

301 OFFSET PLAN REQUIREMENT

302 CALCULATION METHODOLOGY

303 STANDARDS FOR APPROVING OFFSET PLANS

304 OFFSET PLAN COMPLETION

305 ROAD INTEGRITY RESPONSIBILITIES

306 OFFSET INTEGRITY RESPONSIBILITIES

307 PROCEDURES FOR PAVING PROJECTS ALREADY COMPLETED

SECTION 400 – ADMINISTRATIVE REQUIREMENTS (NOT APPLICABLE)

SECTION 500 – MONITORING AND RECORDS

501 RECORDKEEPING AND RECORDS RETENTION

502 TEST METHODS

APPENDIX A

Adopted 6/20/07

MARICOPA COUNTY
AIR POLLUTION CONTROL REGULATIONS

REGULATION II – PERMITS AND FEES

RULE 242
EMISSION OFFSETS GENERATED BY THE VOLUNTARY PAVING OF UNPAVED ROADS

SECTION 100 – GENERAL

101 PURPOSE: To establish enforceable procedures for calculating emission reductions of particulate matter at 10 microns or less (PM_{10}) created through the voluntary paving of unpaved public roads that will be used as offsets to meet New Source Review (NSR) requirements.

102 APPLICABILITY: This rule applies to applicants subject to NSR requirements, who need PM_{10} offsets for the construction of new major stationary sources or major modifications to an existing major stationary source in the Maricopa County PM_{10} non-attainment area and those same applicants who also voluntarily elect to generate emission reductions of PM_{10} by paving unpaved public roads in the Maricopa County non-attainment area.

SECTION 200 – DEFINITIONS: For the purpose of this rule the following definitions shall apply:

201 EMISSION OFFSETS – Emission reductions that have occurred and continue to occur within the Maricopa County PM_{10} non-attainment area, used to mitigate emission increases from new or modified major sources.

202 ENFORCEABLE – Offsets are enforceable if they are independently verifiable, program violations are defined, those liable can be identified, and the Administrator and the Control Officer can apply penalties and secure appropriate corrective action where applicable.

203 PERMANENT – Continuing or enduring for the duration of the New Source Review (NSR) obligation.

204 QUANTIFIABLE – Emission reductions that can be reliably and replicably measured by adhering to the quantification protocol set forth in this rule.

205 ROADWAY SEGMENT – A section of roadway between two definitive points, including but not limited to intersections, road ends or other demarcation points, which define a change in the roadway structure. The length of such segments shall be expressed in miles and/or fractions thereof.

206 SURPLUS – The amount of emission reductions from the paving of an unpaved road that are not:

206.1 Required by federal, state, local law or the Clean Air Act; or

206.2 Included, required or relied upon in the existing federally approved State Implementation Plan (SIP); or

206.3 Included in the Agricultural Best Management Plan; or

206.4 Used by any source to meet any other regulatory requirement including but not limited to, at the time offsets are used, Reasonable Available Control Technology (RACT); or

206.5 Required by any other legal settlement or consent decree; or

206.6 Included in any SIP-related requirements, including but not limited to: Reasonable Further Progress (RFP), milestones, attainment demonstration, conformity regulations, emissions inventories, operating permit regulations, operating permits issued under Maricopa County or Arizona operating permit regulations, any requirement contained in any new source review permits such as Best Available Control Technology (BACT) and Lowest Achievable Emission Rate (LAER) determinations, limitations on operations of raw materials, emission reductions used for offset or netting purposes, and assumptions used in an attainment demonstration; or

206.7 Subject to be included in any of the following as contained in the SIP-approved Plan or in the latest locally-adopted rules or PM plan: Rule 310.01 or Rule 310 of the Maricopa County Air Pollution Control Rules and Regulations, the resolutions listed in 40 CFR 52.120(c)(100), Arizona Revised Statutes Sections 49-457 and 49-504.4, or contingency measures.

SECTION 300 – STANDARDS

301 OFFSET PLAN REQUIREMENTS: Applicants who choose to use the provisions of this rule to meet their NSR PM_{10} offset requirements shall submit an Offset Plan. The Offset Plan shall at a minimum contain the information specified in Sections 301.1 through 301.8.

301.1 A statement that the offsets will be generated from the paving of unpaved public roads identified within the Offset Plan.

301.2 A statement that the unpaved road(s) will be paved according to state or local government paving standards.

301.3 A list of roads that the generator has proposed for paving including their location and roadway segment identification.

301.4 A copy of a letter or agreement from the appropriate state or local government stating that the public road(s):

a. Has been inspected;

b. Has been described as being either gravel- or non-gravel-surfaced;

c. Will be adopted into the state or local government transportation network, if not already a part of the network; and

d. Will be maintained.

301.5 Calculations that quantify vehicle miles traveled for each roadway segment, including all supporting data from the traffic counts performed pursuant to Section 302.1.

301.6 Calculations that quantify emissions from each roadway segment before and after paving, including all results and supporting data from any source-specific testing performed pursuant to Section 302.2.

301.7 Results of any silt content testing performed on the unpaved roads according to Section 502.

301.8 Documentation from the local government, photos, or videos of the public roads to be paved if they are classified as "non-gravel" roads.

302 CALCULATION METHODOLOGY: Calculations of vehicle miles traveled and the emission(s) reductions from the voluntary paving of roads, for each roadway segment, shall be determined according to the procedures in Sections 302.1 and 302.2.

302.1 Vehicle Miles Traveled (VMT): For the purpose of calculating vmt/day and vmt/year for emission reduction calculations, the applicant shall conduct two traffic counts for each roadway segment.

a. Each traffic count shall measure vehicular traffic over a 48-hour period, which may consist of two non-consecutive 24-hour periods. Vehicular traffic shall be measured continuously during each 24-hour period.

b. The two distinct 24-hour traffic counts shall be conducted on two non-holiday weekdays.

c. The vmt/day and vmt/year calculations for each roadway segment shall be based on the time-weighted averages of the two separate traffic counts for that particular roadway segment.

d. The vmt/day shall be calculated by multiplying traffic count results by the length of the roadway segment in miles to the nearest 1/10 of a mile.

e. The average raw daily traffic count shall be multiplied by the daily and monthly seasonal adjustment factors for paved roads and added together for each of the 12 months to calculate the annual vehicle miles traveled. For the purpose of the rule, the adjustment factors shall be obtained from the most recent Freeway Management System data provided by the Arizona Department of Transportation.

302.2 Emissions From Unpaved and Paved Roads:

a. The equations provided in Appendix A shall be used to determine the quantity of PM_{10} emissions (in terms of lbs/VMT) emitted from each unpaved and paved road segment.

b. The default values provided in Appendix A for silt content shall be used to calculate PM_{10} emissions, unless the applicant provides source-specific values obtained in accordance with Section 502.

c. The PM_{10} emission reduction associated with paving a segment of unpaved road shall be calculated as the difference, in tons per year, between the emissions from the road in the unpaved condition and the emissions from the road in the paved condition.

303 STANDARDS FOR APPROVING OFFSET PLANS

303.1 The Control Officer will approve an Emission Offset Plan if it complies with Section 301 and demonstrates that the emission reductions are quantifiable, permanent, enforceable, and surplus.

303.2 The Control Officer shall issue a written approval of the Offset Plan within 90 days after receiving all of the information required by Section 301, indicating which roadway segment(s) may be paved and the amount of resulting emission offsets that may be generated for each roadway segment.

303.3 An approved Offset Plan shall not generate offsets from roadway segments that were paved before June 20, 2007,

304 OFFSET PLAN COMPLETION:

304.1 When the applicant has completed paving any of the roadway segment(s) specified in Section 303.2, the applicant shall submit to the Control Officer a summary report that identifies each roadway segment(s) paved, provides the date(s) paving was completed, and includes a copy of the local or state governments' report or written statement evaluating the condition of each roadway segment. If a written statement is submitted in lieu of a report, the applicant shall submit a follow up report within 30 days after the local or state government's report is available.

304.2 The Control Officer shall issue an approval in writing for the quantity of emission reductions actually generated, based on data submitted pursuant to Section 304.1, prior to the applicant commencing normal_operations.

304.3 The quantity of emission reductions approved by the Control Officer pursuant to Section 304.2, may be used to meet NSR PM_{10} offset requirements.

305 ROAD INTEGRITY RESPONSIBILITIES: After the paving of the roadway segment(s) identified in Section 304.1 is completed, the applicant for a period of 30 years shall:

305.1 At least once every two years after the initial summary report required by Subsection 304.1 is submitted obtain a copy of the local or state governments' report evaluating the condition of each roadway segment(s) identified in Section 304.1; and

305.2 Review the report upon receipt and determine if any roadway segment(s) identified in Section 304.1 is degraded. The roadway segment shall be considered degraded if the pavement condition score is less than 30% according to the pavement condition analysis criteria listed in the document published by the American Association of State Highway and Transportation Officials (AASHTO) entitled *Guidelines for Pavement Management Systems, July 1990.*

305.3 Within 60 days of receipt of the report, submit to the Control Officer a copy of the report and a statement identifying any roadway segment(s) that is degraded.

306 OFFSET INTEGRITY RESPONSIBILITIES:

306.1 If pursuant to Section 305.3 any of the road segments paved and approved by the Control Officer under Section 304.2 are found to be degraded, then within 12 months of the report submittal date, the applicant shall provide replacement offsets.

306.2 Replacement offsets may be provided by:

a. Repaving the degraded road segment(s) identified in Section 305.3, and upon completion submit a report that includes the information specified in Section 304.1 or

b. Generating the appropriate number of PM_{10} offsets pursuant to Rule 242 or

c. Generating the appropriate number of PM_{10} offsets pursuant to Rule 204.

307 PROCEDURES FOR PAVING PROJECTS ALREADY COMPLETED ALREADY COMPLETED: Notwithstanding the provisions of Section 303.3, the owner or operator of any previously permitted modifications that utilized PM_{10} offsets generated from road paving which-occurred before June 20, 2007, may establish federal enforceability and secure federal recognition of the offsets, by complying with the following requirements:

307.1 Submit an Offset Plan consistent with the requirements of Section 301, with the following modification to Section 301.5: the traffic counts are not required to be performed pursuant to Section 302.1

307.2 Submit a summary report consistent with the requirements of Section 304.1

307.3 The silt content of the unpaved road(s) used in calculating the PM_{10} emission reductions under Section 302.2 shall be that for a gravel road, 6.2%, unless the Arizona government transportation agency responsible for the road(s) provides documentary evidence that the road(s) did not, in fact, have a gravel surface.

307.4 Comply with Sections 305, 306 and 501.

SECTION 400 - ADMINISTRATIVE REQUIREMENTS (NOT APPLICABLE)

SECTION 500 - MONITORING AND RECORDS

501 RECORDKEEPING AND RECORDS RETENTION: After the Control Officer has issued an approval of the emission reductions in writing, copies of the documents submitted and/or obtained pursuant to Sections 301, 303.2, 304.1, 305.1, 305.2 and 306 shall be maintained onsite for a minimum of thirty (30) years and provided to the Control Officer upon request.

502 TEST METHODS: Unless the applicant uses the default silt content values provided in Appendix A, silt content of the unpaved road segments shall be determined using the sampling and laboratory analysis procedures provided in EPA's "Compilation of Air Pollutant Emission Factors," (AP-42), Fifth Edition, Volume 1, Appendix C.1. If the applicant performs any silt content analysis, or has such analysis performed on its behalf, the applicant must use the silt content determined from that analysis to calculate PM_{10} emissions.

APPENDIX A

Appendix A consists of calculations for emissions of unpaved and paved roads from the document: *AP-42, Fifth edition, Compilation of Air Pollutant Emission Factors, Volume 1, Stationary and Point Area Sources, Miscellaneous Sources, Chapter 13, December, 2003.*

1. UNPAVED ROADS:

a. For the purposes of this rule, the following empirical expression shall be used to estimate the quantity in pounds (lb) of particulate emissions from publicly accessible unpaved roads, dominated by light duty vehicles, per vehicle mile traveled (VMT) is:

$$\text{Equation \#1:} \quad E = \frac{k(s/12)^{a}(S/30)^{d}}{(M/0.5)^{c}} - C$$

where k, a, c, and d are empirical constants given in Table A below and
E = size-specific emission factor (lb/VMT)
s = surface material silt content (%)
M= surface material moisture content (%)
S = mean vehicle speed (mph)
C = emission factor for 1980's vehicle fleet exhaust, brake wear and tear.

b. The default values listed for surface material silt content, (s),in Table B shall be used in Equation 1, as applicable, unless the applicant provides source-specific values for (s) using the methods specified in Section 502.

c. The source characteristics s, and M in this formula are referred to as correction parameters for adjusting the emission estimates to local conditions. The conversion from lb/VMT to grams (g) per vehicle kilometer traveled (VKT) is as follows:

1 lb / VMT = 281.9g / VKT

TABLE A - CONSTANTS FOR EQUATION #1 UNPAVED PUBLIC ROADS

CONSTANT	PM-2.5	PM-10
k (lb/VMT)	0.27	1.8
a	1	1
c	0.2	0.2
d	0.5	0.5
Quality Rating	C	B

TABLE B - DEFAULT VALUES FOR EQUATION #1 –UNPAVED PUBLIC ROADS

VARIABLE	DEFAULT VALUE
s (%)	6.2 % gravel road
s (%)	11 % dirt road
W	average weight of vehicle
M	1%
S	20 mph
C	0.00047 lb / VMT

2. PAVED ROADS:

a. The quantity of particulate emissions from resuspension of loose material on the road surface due to vehicle travel on a dry paved road may be estimated using the following empirical expression:

Equation #3 $E = k\,(sL/2)^{0.65}\,(W/3)^{1.5} - C$

where:

E = particulate emission factor (having units matching the units of k)

k = particulate size multiplier for particle size range and units of interest

sL = road surface silt loading (grams per square meter) (g/m^2)

W = average weight (tons) of the vehicles traveling the road

C = emission factor for 1980s vehicle fleet exhaust, brake wear and tire wear.

b. The particulate size multiplier (k) above varies with aerodynamic size range. To determine particulate emissions for a specific particle range, use the appropriate value of k in Table C.

TABLE C – PARTICLE SIZE MULTIPLIERS FOR PAVED ROAD EQUATION (k constant)

SIZE RANGE	g/VKT	g/VMT	lb/ VMT
PM -2.5	1.1	1.8	0.0040
PM -10	4.6	7.3	0.016
PM -15	5.5	9.0	0.020
PM -30	24	38	0.082

TABLE D - DEFAULT VALUES FOR EQUATION #3 - PAVED ROADS

VARIABLE	DEFAULT VALUE
sL(g/m^2) - public roads	0.23 $grams/m^2$
W	3.74 tons
C	0.00047 lb/ VMT

REGULATION II - PERMITS AND FEES

RULE 245
CONTINUOUS SOURCE EMISSION MONITORING

INDEX

SECTION 100 - GENERAL

101 PURPOSE

102 APPLICABILITY

SECTION 200 - DEFINITIONS

201 CAPACITY FACTOR

202 CONTINUOUS MONITORING SYSTEM

203 EMISSION STANDARD

204 FOSSIL FUEL-FIRED STEAM GENERATOR

205 NITRIC ACID PLANT

206 SULFURIC ACID PLANT

SECTION 300 - STANDARDS

301 EQUIPMENT INSTALLATION AND PERFORMANCE TESTS

302 MINIMUM MONITORING REQUIREMENTS

303 MINIMUM SPECIFICATIONS FOR MONITORING EQUIPMENT

304 MINIMUM DATA REQUIREMENTS

305 MONITORING EQUIPMENT OPERATING REQUIREMENTS

306 EXEMPTIONS

307 SPECIAL CONSIDERATION

SECTION 400 - ADMINISTRATIVE REQUIREMENTS (NOT INCLUDED)

SECTION 500 - MONITORING AND RECORDS

501 DATA REDUCTION

502 MONITORING DATA REQUIRED

503 MONITORING EQUIPMENT INSPECTIONS

504 TRANSMISSOMETER RESULTS

Revised 07/13/88
Repealed and Adopted 11/15/93

MARICOPA COUNTY
AIR POLLUTION CONTROL REGULATIONS

REGULATION II - PERMITS AND FEES

RULE 245
CONTINUOUS SOURCE EMISSION MONITORING

SECTION 100 - GENERAL

101 PURPOSE: To set forth continuous source emission monitoring requirements for fossil fuel-fired generators, nitric acid plants, sulfuric acid plants and fluid bed catalytic cracking units.

102 APPLICABILITY: This rule applies to:

102.1 Fossil fuel-fired steam generators, as specified in Section 302.1 of this rule, which shall be monitored for opacity emissions, nitrogen oxides emissions, sulfur dioxide emissions and oxygen or carbon dioxide.

102.2 Nitric acid plants, as specified in Section 302.2 of this rule, which shall be monitored for nitrogen oxides emissions.

102.3 Sulfuric acid plants, as specified in Section 302.3 of this rule, which shall be monitored for sulfur dioxide emissions.

102.4 Fluid bed catalytic cracking unit catalyst regenerators, as specified in Section 302.4 of this rule, which shall be monitored for sulfur dioxide emissions.

SECTION 200 - DEFINITIONS: For the purpose of this rule, the following definitions shall apply:

201 CAPACITY FACTOR - The ratio of the average load on a machine or equipment for the period of time considered to the capacity rating of the machine or equipment.

202 CONTINUOUS MONITORING SYSTEM - The total equipment required under Section 302 of this rule to sample and analyze emissions or process parameters and to provide a permanent data record.

203 EMISSION STANDARD - A regulation (or portion thereof) setting forth an allowable rate of emission, level of opacity, or prescribing equipment or fuel specifications that result in control of air pollution emissions.

204 FOSSIL FUEL-FIRED STEAM GENERATOR - A furnace or boiler used in the process of burning fossil fuel for the primary purpose of producing steam by heat transfer.

205 NITRIC ACID PLANT - Any source producing nitric acid 30 to 70 percent in strength by either the pressure or atmospheric pressure process.

206 SULFURIC ACID PLANT - Any source producing sulfuric acid by the contact process by burning elemental sulfur, alkylation acid, hydrogen sulfide, or acid sludge. This does not include sources where conversion to sulfuric acid is utilized primarily as a means of preventing emissions to the atmosphere of sulfur dioxide or other sulfur compounds.

SECTION 300 - STANDARDS

301 EQUIPMENT INSTALLATION AND PERFORMANCE TESTS: Every owner or operator of an emission source in a category described in Section 102 of this rule shall:

301.1 Install, calibrate, operate, and maintain all monitoring equipment necessary for continuously monitoring the pollutants specified in this rule, and

301.2 Complete the installation and performance tests of such equipment and begin monitoring and recording within 18 months of plant approval.

302 MINIMUM MONITORING REQUIREMENTS:

302.1 Fossil Fuel-Fired Steam Generators: Each fossil fuel-fired steam generator, except as provided in Sections 302.1a and 302.1b of this rule, with an annual average capacity factor greater than 30 percent as reported to the Federal Power Commission for calendar year 1974, or as otherwise demonstrated to the Control Officer by the owner or operator, shall conform with the following monitoring requirements when such source is subject to an emission standard of an applicable plan for the pollutant in question.

a. A continuous emission monitoring system for the measurement of opacity which meets the performance specifications of Section 303.1 of this rule shall be installed, calibrated, maintained, and operated in accordance with the procedures of this rule by the owner or operator of

any such steam generator of greater than 250 million BTU per hour heat input except where:

(1) Gaseous fuel is the only fuel burned, or

(2) Oil or a mixture of gas and oil are the only fuels burned and the source is able to comply with the applicable particulate matter and opacity regulations without utilization of particulate matter collection equipment, and where the source has never been found through any administrative or judicial proceedings to be in violation of any visible emission standard of the applicable plan.

b. A continuous emission monitoring system for the measurements of sulfur dioxide which meets the performance specifications of Section 303.3 of this rule, shall be installed, calibrated, using sulfur dioxide calibration gas mixtures, gas cells or other gas mixtures approved by the Control Officer, maintained, and operated on fossil fuel-fired steam generators of greater than 250 million BTU per hour heat input which has installed sulfur dioxide pollutant control equipment.

c. A continuous emission monitoring system for the measurement of nitrogen oxides which meets the performance specification of Section 303.2 of this rule shall be installed, calibrated, using nitric oxide calibration gas mixtures, gas cells or other gas mixtures approved by the Control Officer, maintained, and operated on fossil fuel-fired steam generators of greater than 1000 million BTU per hour heat input when such source is located in an air quality control region where the Control Officer has specifically determined that a control strategy for nitrogen dioxide is necessary to attain the national standards, unless the source owner or operator demonstrates during source compliance tests as required by the Control Officer that such a source emits nitrogen oxides at levels 30 percent or more below the emission standard within the applicable plan.

d. A continuous emission monitoring system for the measurement of the percent oxygen or carbon dioxide which meets the performance specifications of Sections 303.4 and 303.5 of this rule shall be installed, calibrated, operated, and maintained on fossil fuel-fired steam generators where measurements of oxygen or carbon dioxide in the flue gas are required to convert either sulfur dioxide or nitrogen oxides continuous emission monitoring data, or both, to units of the emission standard within the applicable plan.

302.2 **Nitric Acid Plants:** Each nitric acid plant of greater than 300 tons per day production capacity, the production capacity being expressed as 100 percent acid, located in an air quality control region where the Control Officer has specifically determined that a control strategy for nitrogen dioxide is necessary to attain the national standard, shall install, calibrate, maintain, and operate a continuous emission monitoring system for the measurement of nitrogen oxides which meets the performance specifications of Section 303.2 of this rule for each nitric acid producing source within such plant.

302.3 **Sulfuric Acid Plants:** Each sulfuric acid plant of greater than 300 tons per day production capacity, the production being expressed as 100 percent acid, shall install, calibrate, maintain and operate a continuous emission monitoring system for the measurement of sulfur dioxide which meets the performance specifications of Section 303.3 of this rule for each sulfuric acid producing source within such plant.

302.4 **Fluid Bed Catalytic Cracking Unit Catalyst Regenerators at Petroleum Refineries:** Each catalyst regenerator for fluid bed catalytic cracking units of greater than 20,000 barrels per day fresh feed capacity shall install, calibrate, maintain, and operate a continuous emission monitoring system for the measurement of opacity which meets the performance specifications of Section 303.1 of this rule.

303 **MINIMUM SPECIFICATIONS FOR MONITORING EQUIPMENT:** Owners or operators of monitoring equipment installed to comply with this rule shall demonstrate compliance with the performance specifications set forth in Appendix B of Part 60, Chapter 1, Title 40, CFR as amended, incorporated herein by reference. However, where reference is made to the Administrator in Appendix B of 40 CFR 60, the Control Officer may allow the use of either the state approved reference method or the federally approved reference method as published in 40 CFR 60. The performance specifications to be used with each type of monitoring system are listed below.

303.1 Continuous emission monitoring systems for measuring opacity shall comply with performance specification 1.

303.2 Continuous emission monitoring systems for measuring nitrogen oxides shall comply with performance specification 2.

303.3 Continuous emission monitoring systems for measuring sulfur dioxide shall comply with performance specification 2.

303.4 Continuous emission monitoring systems for measuring oxygen shall comply with performance specification 3.

303.5 Continuous emission monitoring systems for measuring carbon dioxide shall comply with performance specification 3.

304 MINIMUM DATA REQUIREMENTS:

304.1 The owners or operators of sources required to install continuous emission monitoring systems shall submit to the Control Officer a written report of excess emissions for each calendar quarter and the nature and cause of the excess emissions, if known. The averaging period used for data reporting shall correspond to the averaging period specified in the emission standard for the pollutant source category in question. The required report shall include, as a minimum, the data stipulated in this rule.

304.2 For opacity measurements, the summary shall consist of the magnitude in actual percent opacity of all six-minute opacity averages greater than any applicable standards in these rules for each hour of operation of the source. Average values may be obtained by integration over the averaging period or by arithmetically averaging a minimum of four equally spaced, instantaneous opacity measurements per minute. Any time periods exempted shall be deleted before determining any averages in excess of opacity standards.

304.3 For gaseous measurements the summary shall consist of emission averages in the units of the applicable standard for each averaging period during which the applicable standard was exceeded.

304.4 The date and time identifying each period during which the continuous emission monitoring system was inoperative, except for zero and span checks and the nature of system repair or adjustment shall be reported. The Control Officer may require proof of continuous emission monitoring system performance whenever system repairs or adjustments have been made.

304.5 When no excess emissions have occurred and the continuous emission monitoring system(s) have not been inoperative, repaired, or adjusted, such information shall be included in the report.

304.6 Owners or operators of affected sources shall maintain a file of all information reported in the quarterly summaries, and all other data collected either by the continuous emission monitoring system or as necessary to convert monitoring data to the units of the applicable standard for a minimum of two years from the date of collection of such data or submission of such summaries.

305 MONITORING EQUIPMENT OPERATING REQUIREMENTS: The owner, lessee, or operator shall provide, install, calibrate, maintain and operate air contaminant

monitoring devices as are reasonable and required pursuant to these Regulations to determine compliance in a manner acceptable to the Control Officer.

306 EXEMPTIONS: The provisions of this rule shall not apply to any source which is:

306.1 Subject to a New Source Performance Standard promulgated in 40 CFR part 60;

306.2 Not subject to an applicable emission standard of the approved State Implementation Plan; or

306.3 Scheduled for retirement within five years after inclusions of monitoring requirements for the source in these Regulations, provided that adequate evidence and guarantees are provided that clearly show that the source will cease operations prior to such date.

306.4 A temporary exemption from the monitoring and reporting requirements of this rule may be provided during any period of monitoring system malfunction, provided that the source owner or operator shows to the satisfaction of the Control Officer that the malfunction was unavoidable and is being repaired as expeditiously as practicable.

307 SPECIAL CONSIDERATION: The Control Officer may approve, on a case-by-case basis, alternative monitoring requirements different from the provisions of Sections 301 through 305 of this rule if the installation of a continuous emission monitoring system cannot be implemented by a source due to physical plant limitations or extreme economic reasons. Alternative monitoring procedures shall be specified by the Control Officer on a case-by-case basis and shall include as a minimum annual manual stack tests for the pollutants identified for each type of source in this rule. Examples of such special cases include, but are not limited to, the following:

307.1 Alternative monitoring requirements may be prescribed when installation of a continuous emission monitoring system or monitoring device specified by this rule would not provide accurate determinations of emissions (e.g. condensed, uncombined water vapor may prevent an accurate determination of opacity using commercially available continuous emission monitoring systems).

307.2 Alternative monitoring requirements may be prescribed when the affected source is infrequently operated (e.g. some affected sources may operate less than one month per year).

SECTION 500 - MONITORING AND RECORDS

501 DATA REDUCTION: Owners or operators of affected sources shall use the procedures described in Appendix A for converting monitoring data to units of the standard where necessary.

502 MONITORING DATA REQUIRED: Monitoring information shall be provided in writing to the Control Officer as directed.

503 MONITORING EQUIPMENT INSPECTIONS: Air pollutant monitoring devices shall be available for inspection by the Control Officer during all reasonable times (ARS §49-487).

504 TRANSMISSOMETER RESULTS: The results of continuous transmissometer monitoring which indicate opacity was not in excess of the standard at the time of an alleged violation from visual observations are probative but not conclusive evidence of the actual opacity of an emission. The owner or operator of a source shall meet the burden of providing proof that the transmissometer used meets performance specification 1 in the Arizona Testing Manual for Air Pollutant Emissions, and that the instrument has been properly maintained and calibrated, and the resulting data have not been tampered with in any way.

REGULATION II - PERMITS AND FEES

RULE 270
PERFORMANCE TESTS

INDEX

SECTION 100 - GENERAL

101 PURPOSE

102 AUTHORITY TO REQUIRE TESTING

103 SUPPORTIVE DATA FOR GOOD MAINTENANCE AND OPERATING PRACTICES

SECTION 200 - DEFINITIONS (NOT INCLUDED)

SECTION 300 - STANDARDS

301 PERFORMANCE TESTS REQUIRED

SECTION 400 - ADMINISTRATIVE REQUIREMENTS

401 PERFORMANCE TESTS REQUIRED

402 TESTING CRITERIA

403 TESTING CONDITIONS

404 NOTICE OF TESTING

405 TESTING FACILITIES REQUIRED

406 MINIMUM TESTING REQUIRED

407 COMPLIANCE WITH THE EMISSION LIMITS

408 ADDITIONAL TESTING

SECTION 500 - MONITORING AND RECORDS (NOT INCLUDED)

Revised 07/13/88

Repealed and Adopted 11/15/93

MARICOPA COUNTY
AIR POLLUTION CONTROL REGULATIONS

REGULATION II - PERMITS AND FEES

RULE 270
PERFORMANCE TESTS

SECTION 100 - GENERAL

101 PURPOSE: To establish performance testing requirements for owners and operators of stationary sources.

102 AUTHORITY TO REQUIRE TESTING: Nothing in this rule shall be construed to abrogate the Control Officer's authority to require testing.

103 SUPPORTIVE DATA FOR GOOD MAINTENANCE AND OPERATING PRACTICES: Nothing in this rule shall be so construed as to prevent the utilization of measurements from emissions monitoring devices or techniques not designated as performance tests as evidence of compliance with applicable good maintenance and operating requirements.

SECTION 300 - STANDARDS

301 PERFORMANCE TESTS REQUIRED: Except as provided in Section 407 of this rule:

301.1 The applicable procedures and testing methods contained in the Arizona Testing Manual; 40 CFR 52, Appendices D and E; 40 CFR 60, Appendices A through F; and 40 CFR 61, Appendices B and C shall be used to determine compliance with the requirements established in this rule or contained in permits issued pursuant to this rule.

301.2 The opacity of visible emissions shall be determined by Reference Method 9 of the Arizona Testing Manual. A permit may specify a method other than Method 9 for determining the opacity of emissions from a particular emissions unit, if the method has been promulgated by the Administrator in 40 CFR 60, Appendix A.

301.3 The heat content of solid fuel shall be determined according to ASTM Method D-3176-89 (Practice for Ultimate Analysis of Coal and Coke) and ASTM Method D-2015-91 (Test Method for Gross Calorific Value of Coal and Coke by the Adiabatic Bomb Calorimeter).

301.4 All except for ambient air monitoring and emissions testing required under Rule 360 and Rule 370 of these rules, alternative and equivalent test methods in any test plan submitted to the Control Officer may be approved by the Control Officer for the duration of that plan provided that the following three criteria are met:

a. The alternative or equivalent test method measures the same chemical and physical characteristics as the test method it is intended to replace.

b. The alternative or equivalent test method has substantially the same or better reliability, accuracy, and precision as the test method it is intended to replace.

c. Applicable quality assurance procedures are followed in accordance with the Arizona Testing Manual, 40 CFR 60, or other methods approved by the Control Officer.

SECTION 400 - ADMINISTRATIVE REQUIREMENTS

401 PERFORMANCE TESTS REQUIRED: Within 60 days after a source subject to the permit requirements of this rule has achieved the capability to operate at its maximum production rate on a sustained basis but no later than 180 days after initial start-up of such source and at such other times as may be required by the Control Officer, the owner or operator of such source shall conduct performance tests and shall furnish the Control Officer with a written report of the results of the tests.

402 TESTING CRITERIA: Performance tests shall be conducted and data reduced in accordance with the test method and procedures contained in the Arizona Testing Manual unless the Control Officer:

402.1 Specifies or approves, in specific cases, the use of a reference method with minor changes in methodology,

402.2 Approves the use of an equivalent method,

402.3 Approves the use of an alternative method the results of which the Control Officer has determined to be adequate for indicating whether a specific source is in compliance, or

402.4 Waives the requirement for performance tests because the owner or operator of a source has demonstrated by other means to the Control Officer's satisfaction that the source is in compliance with the standard.

402.5 Nothing in this rule shall be construed to abrogate the Control Officer's authority to require testing.

403 TESTING CONDITIONS: Performance tests shall be conducted under such conditions as the Control Officer shall specify to the plant operator based on representative performance of the source or facility. The owner or operator shall make available to the Control Officer such records as may be necessary to determine the conditions of the performance tests. Operations during periods of start-up, shutdown, and malfunction shall not constitute representative conditions of performance tests unless otherwise specified in the applicable standard.

404 NOTICE OF TESTING: The owner or operator of a permitted source shall provide the Control Officer two weeks prior notice of the performance test to afford the Control Officer the opportunity to have an observer present.

405 TESTING FACILITIES REQUIRED: The owner or operator of a permitted source shall provide, or cause to be provided, performance testing facilities as follows:

405.1 Sampling ports adequate for test methods applicable to such source.

405.2 Safe sampling platform(s).

405.3 Safe access to sampling platforms(s).

405.4 Utilities for sampling and testing equipment.

406 MINIMUM TESTING REQUIRED: Each performance test shall consist of three separate runs using the applicable test method. Each run shall be conducted for the time and under the conditions specified in the applicable standard. For the purpose of determining compliance with an applicable standard, the arithmetic mean of results of the three runs shall apply. In the event that a sample is accidentally lost or conditions occur in which one of the three runs must be discontinued because of forced shutdown, failure of an irreplaceable portion of the sample train, extreme meteorological conditions, or other circumstances beyond the owner or operator's control, compliance may, upon the Control Officer's approval, be determined using the arithmetic mean of the results of the two other runs. If the Control Officer is present, tests may only be stopped with the Control Officer's approval. If the Control Officer is not present, tests may only be stopped for good cause, which includes forced shutdown, failure of an irreplaceable portion of the sample train, extreme meteorological conditions, or other

circumstances beyond the operator's control. Termination of testing without good cause after the first run is commenced shall constitute a failure of the test.

407 COMPLIANCE WITH THE EMISSION LIMITS: Except as provided in Section 408 of this rule, compliance with the emission limits established in this rule or as prescribed in permits issued pursuant to this rule shall be determined by the performance tests specified in this rule or in the permit.

408 ADDITIONAL TESTING: In addition to performance tests specified in this rule, compliance with specific emission limits may be determined by:

408.1 Opacity tests.

408.2 Emission limit compliance tests specifically designated as such in the rule establishing the emission limit to be complied with.

408.3 Continuous emission monitoring, where applicable quality assurance procedures are followed and where it is designated in the permit or in an applicable requirement to show compliance.

408.4 Nothing in this rule shall be so construed as to prevent the utilization of measurements from emissions monitoring devices or techniques not designated as performance tests as evidence of compliance with applicable good maintenance and operating requirements.

EGULATION II – PERMITS AND FEES

RULE 280
FEES

INDEX

SECTION 100 – GENERAL

101 PURPOSE

102 APPLICABILITY

SECTION 200 – DEFINITIONS

201 ANNUAL ADMINISTRATIVE FEE

202 BILLABLE PERMIT ACTION

203 EXISTING SOURCE

204 ITEMIZED INVOICE

205 NON-MAJOR TITLE V SOURCE

206 REGULATED AIR POLLUTANT

207 SOURCES REQUIRED TO HAVE A TITLE V PERMIT

SECTION 300 – STANDARDS

301 TITLE V PERMIT FEES

302 NON-TITLE V PERMIT FEES

303 GENERAL PERMIT FEES

304 ANNUAL ADJUSTMENT OF FEES

305 CALCULATION AND PAYMENT OF EMISSIONS-BASED FEES

306 HEARING BOARD FILING FEE

307 CONDITIONAL ORDER FEE

308 GASOLINE DELIVERY VESSEL DECAL FEE

309 OPEN BURN FEE

310 DUST CONTROL PERMIT FEE

311 DUST CONTROL TRAINING CLASS FEE

312 SUBCONTRACTOR REGISTRATION FEE

313 ASBESTOS NOTIFICATION AND PLAN REVIEW FILING FEES

314 LATE FEE

315 DELINQUENCY FEE

316 SUBSCRIPTION FEE FOR RULE REVISIONS

317 ACCELERATED PERMIT PROCESSING FEE

318 FAILURE TO PAY REQUIRED FEES

319 INFORMAL REVIEW OF PERMIT PROCESSING HOURS

320 HAZARDOUS AIR POLLUTANTS TIER 4 RISK MANAGEMENT ANALYSIS FEE

SECTION 400 – ADMINISTRATIVE REQUIREMENTS

401 EFFECTIVE DATE OF FEES

402 PAYMENT OF FEES

403 FEE TABLE A, B, C, D, E, F, G, H, AND I SOURCES

SECTION 500 – MONITORING AND RECORDS (NOT APPLICABLE)

Revised 07/13/88
Revised 08/05/91
Revised 11/15/93
Revised 08/19/98
Revised 03/15/00
Revised 05/21/03
Revised 04/07/04
Revised 05/18/05
Revised 07/12/06
Revised 03/26/08
Revised 05/26/10

MARICOPA COUNTY
AIR POLLUTION CONTROL REGULATIONS
REGULATION II – PERMITS AND FEES

RULE 280
FEES

SECTION 100 – GENERAL

101 **PURPOSE:** To establish fees to be charged to owners and operators of sources of air pollution subject to these rules.

102 **APPLICABILITY:** Every person owning/operating equipment or engaged in activities that may cause or contribute to air pollution is subject to the prescribed fees in this rule.

SECTION 200 – DEFINITIONS: For the purpose of this rule, the following definitions apply, in addition to those definitions found in Rule 100 (General Provisions and Definitions) of these rules. In the event of any inconsistency between any of the Maricopa County air pollution control rules, the definitions in this rule take precedence.

201 **ANNUAL ADMINISTRATIVE FEE –** Paid annually by a source to recover the average cost of services required to administer the permit and conduct inspections. For a Non-Title V permitted source, the annual administrative fee also covers the cost of renewing the Non-Title V permit. For a General permitted source, the annual administrative fee also covers the cost of reapplying for authorization to operate under a General Permit.

202 **BILLABLE PERMIT ACTION –** The review, issuance or denial of a new permit, significant permit revision, or minor permit revision, or the renewal of an existing permit.

203 **EXISTING SOURCE –** A source that has commenced construction and has been issued a permit pursuant to A.R.S. § 49-480 after September 1, 1993.

204 **ITEMIZED INVOICE –** A breakdown of the permit processing time into the categories of pre-application activities, completeness review, substantive (technical) review, and public involvement activities, and within each category, a further breakdown by employee name.

205 **NON-MAJOR TITLE V SOURCE –** A source required to obtain a Non-Title V permit under Rule 200 to which both of the following apply:

205.1 The source is classified as a Synthetic Minor Source, and

205.2 The source has a permit that contains allowable emissions greater than or equal to 50% of the major source threshold.

206 **REGULATED AIR POLLUTANT –** For the purposes of Section 305 of this rule, regulated air pollutant consists of the following air pollutants:

206.1 Any conventional air pollutant as defined in A.R.S. § 49-401.01, which means any pollutant for which the Administrator of EPA has promulgated a primary or a secondary National Ambient Air Quality Standard (NAAQS) except carbon monoxide (i.e., for nitrogen oxides [NO_X], lead, sulfur oxides [SO_X] measured as sulfur dioxide [SO_2], ozone, and particulates).

206.2 Nitrogen oxides (NO_X) and volatile organic compounds (VOCs).

206.3 Any air contaminant that is subject to a standard contained in Rule 360 (New Source Performance Standards) of these rules or promulgated under Section 111 (Standards of Performance for New Stationary Sources) of the Act.

206.4 Any hazardous air pollutant (HAP) as defined in A.R.S. § 49-401.01 or listed in Section 112(b) (Hazardous Air Pollutants; List of Pollutants) of the Act.

206.5 Any Class I or II substance listed in Section 602 (Stratospheric Ozone Protection; Listing of Class I and Class II Substances) of the Act.

207 **SOURCES REQUIRED TO HAVE A TITLE V PERMIT –** The following sources shall be considered sources required to have a Title V permit:

207.1 Any source required to have a Title V permit under Rule 200, Section 302 of these rules;

207.2 Any source that qualifies for a Non-Title V permit but that elects to have a Title V permit under Rule 200, Section 302 of these rules.

SECTION 300 – STANDARDS

301 TITLE V PERMIT FEES: The owner or operator of a source required to have a Title V permit shall pay fees according to the following provisions:

301.1 Fees for Billable Permit Actions: The owner or operator of a Title V source shall pay to the Control Officer $133.50 per hour, adjusted annually under Section 304 of this rule, for all permit processing time required for a billable permit action. The owner or operator of a Title V source shall also pay the Control Officer the actual costs incurred by the Control Officer to meet the public participation requirements of Rule 210 of these rules. Costs incurred to meet the public participation requirements of Rule 210 of these rules may include, but are not limited to, costs incurred by the Control Officer to publish public notice of a public hearing or draft permit, to hire a hearing officer, to hire transcription or court reporting services, to rent meeting room space, and to perform permit processing activities associated with a public hearing, such as time spent by a permit engineer(s) to participate in the public hearing and to prepare responses to comments. Permit processing activities associated with a public hearing shall be charged at the rate of $133.50 per hour, adjusted annually under Section 304 of this rule. The fees shall be paid as follows:

a. An application shall be submitted with the applicable fee from the table below:

Type of Application	Application Fee
New permit application	$7,000
Significant permit revision application that is a result of a major modification	$7,000
Other significant permit revision applications	$1,000
Minor permit revision application	$150
Permit renewal application	$3,500

b. At any time after submittal of the application, the Control Officer may request additional application fees based on the cost to date of reviewing and acting on the application, minus all fees previously submitted for the application.

c. When permit processing is completed for a facility, the Control Officer shall send an itemized invoice. The invoice shall indicate the total actual cost of reviewing and acting upon the application, the actual costs incurred by the Control Officer to meet the public participation requirements of Rule 210 of these rules, minus all fees previously submitted, and the balance due.

d. The Control Officer shall not issue a permit, permit revision, or permit renewal until the balance due on the itemized invoice is paid in full. The Control Officer may deny a permit, a permit revision, or a permit renewal in

accordance with Rule 200 of these rules if the applicant does not pay fees required for billable permit actions within 90 days of the invoice date.

301.2 Annual Fees: The owner or operator of a Title V source shall pay an annual administrative fee plus an emissions-based fee as follows:

a. The applicable annual administrative fee from the table below, as adjusted annually under Section 304 of this rule. The fee is due on the first anniversary date of the initial permit covering construction and startup of operations and annually thereafter on that date.

Title V Source Category	Annual Administrative Fee
Aerospace	$18,320
Air Curtain Destructors	$840
Cement Plants	$68,590
Combustion/Boilers	$16,680
Compressor Stations	$13,630
Expandable Foam	$14,800
Landfills	$18,140
Lime Plants	$64,790
Copper and Nickel Mines	$16,150
Gold Mines	$16,150
Paper Mills	$22,060
Petroleum Products Terminal Facilities	$25,800
Polymeric Fabric Coaters	$18,140
Reinforced Plastics	$13,630
Semiconductor Fabrication	$29,010
Copper Smelters	$68,590
Utilities-Primary Fuel Natural Gas	$9,500 + $16,480 per turbine installed/modified after May 10, 1996 and subject to annual source testing or CEM RATA* certifications
Utilities-Fossil Fuel Except Natural Gas	$35,080
Vitamin/Pharmaceutical Manufacturing	$17,020
Wood Furniture	$15,010
Others	$18,130
Others with Continuous Emissions Monitoring	$22,070

* Continuous emissions monitoring relative accuracy test audit (CEM RATA)

b. An emissions-based fee of $38.25 per ton of actual emissions of all regulated pollutants emitted during the previous calendar year as determined by Section 305 of this rule. The fee is adjusted annually under Section 304 of this rule.

302 NON-TITLE V PERMIT FEES: The owner or operator of a source required to have a Non-Title V permit under Rule 200, Section 303 of these rules shall pay fees according to the following provisions:

302.1 Fees for Billable Permit Actions: The owner or operator of a Non-Title V source shall pay to the Control Officer $133.50 per hour, adjusted annually under Section 304 of this rule, for all permit processing time required for a billable permit action, except for the renewal of an existing permit. In addition, the owner or operator of a Non-Title V source shall pay the Control Officer the actual costs incurred by the Control Officer to meet the public participation requirements of Rule 220 of these rules, including costs incurred to meet the public participation requirements for the renewal of an existing permit. Costs incurred to meet the public participation requirements of Rule 220 of these rules may include, but are not limited to, costs incurred by the Control Officer to publish public notice of a public hearing or draft permit, to hire a hearing officer, to hire transcription or court reporting services, to rent meeting room space, and to perform permit processing activities associated with a public hearing, such as time spent by a permit engineer(s) to participate in the public hearing and to prepare responses to comments. Permit processing activities associated with a public hearing shall be charged at the rate of $133.50 per hour, adjusted annually under Section 304 of this rule. The minimum fee due shall be $200.00. The fees shall be paid as follows:

a. An application shall be submitted with an application fee of $200.00.

b. At any time after the submittal of an application the Control Officer may request an additional application fee based on the cost to date of reviewing and acting on the application, minus all fees previously submitted for the application.

c. When permit processing is completed and final costs are greater than the fee submitted with the application under Section 302.1(a) of this rule, the Control Officer shall send an itemized invoice. The invoice shall indicate the total cost of reviewing and acting upon the application, the actual costs incurred by the Control Officer to meet the public participation requirements of Rule 220 of these rules, minus all fees previously submitted, and the balance due.

d. The maximum fee for processing permit applications listed in Section 302.1 of this rule is $25,000.00.

e. The Control Officer shall not issue a permit or permit revision until the balance due on the itemized invoice is paid in full. The Control Officer may deny a permit or a permit revision in accordance with Rule 200 of these rules if the applicant does not pay fees required for billable permit actions within 90 days of the invoice date.

302.2 Annual Administrative Fees: The owner or operator of an existing Non-Title V source shall pay the applicable annual administrative fee from the table below, as adjusted annually under Section 304 of this rule. The fee is due on the first anniversary date of the initial permit covering construction and startup of operations and annually thereafter on that date.

Fee Table Source categories designated as Fee Tables A–I are listed in Sections 403.1–403.9 of this rule	**Annual Administrative Fee**
Sources listed in Fee Table A (see Section 403.1)	$5,980
Sources listed in Fee Table B (see Section 403.2)	$1,550
Sources listed in Fee Tables C–D (see Sections 403.3 and 403.4)	$610
Sources listed in Fee Table E (see Section 403.5)	$320
Sources listed in Fee Table F (see Section 403.6)	$7,940
Sources listed in Fee Table G (see Section 403.7)	$4,790
Sources listed in Fee Table H (see Section 403.8)	$7,940
Sources listed in Fee Table I (see Section 403.9)	$4,790

303 GENERAL PERMIT FEES: The owner or operator of a source required to obtain a permit pursuant to these rules who elects to be covered by a General Permit shall pay fees according to the following provisions:

303.1 Fees Due with an Application: The owner or operator of a source initially applying for authorization to operate under a General Permit shall pay the applicable fee from the table below with the submittal of the application.

Fee Table Source categories designated as Fee Tables A–I are listed in Sections 403.1–403.9 of this rule	**Application Fee**
Title V General Permits except Air Curtain Destructors	Fee from Section 301.1(a) table for Title V source category
Air Curtain Destructors	$840
Sources listed in Fee Table A (see Section 403.1)	$4,870
Sources listed in Fee Table B (see Section 403.2)	$3,250
Sources listed in Fee Tables C–D (see Sections 403.3 and 403.4)	$320
Sources listed in Fee Table E (see Section 403.5)	$240
Sources listed in Fee Table F (see Section 403.6)	$6,970
Sources listed in Fee Table G (see Section 403.7)	$4,170
Sources listed in Fee Table H (see Section 403.8)	$6,970
Sources listed in Fee Table I (see Section 403.9)	$4,170

303.2 Annual Administrative Fee: The owner or operator of a source with an authorization to operate under a General Permit shall pay the applicable annual administrative fee from the table below, as adjusted annually under Section 304 of

this rule. The fee is due on the first anniversary date of the initial approval to operate under a General Permit and annually thereafter on that date.

Fee Table Source categories designated as Fee Tables A–I are listed in Sections 403.1–403.9 of this rule	**Annual Administrative Fee**
Title V General Permits	Fee from Section 301.2(a) table for Title V source category
Sources listed in Fee Table A (see Section 403.1)	$4,870
Sources listed in Fee Table B (see Section 403.2)	$3,250
Sources listed in Fee Tables C–D (see Sections 403.3 and 403.4)	$320
Sources listed in Fee Table E (see Section 403.5)	$240
Sources listed in Fee Table F (see Section 403.6)	$6,970
Sources listed in Fee Table G (see Section 403.7)	$4,170
Sources listed in Fee Table H (see Section 403.8)	$6,970
Sources listed in Fee Table I (see Section 403.9)	$4,170

304 **ANNUAL ADJUSTMENT OF FEES:** Fees shall be increased yearly by the percentage, if any, by which the Consumer Price Index for the most recent year exceeds the base year Consumer Price Index as set forth in the following manner:

304.1 The Control Officer shall adjust the hourly rate every January 1, to the nearest 10 cents per hour, beginning on January 1, 2009. The Control Officer will multiply $133.50 by the Consumer Price Index (CPI) for the most recent year as described in Section 304.4 of this rule, and then divide by the CPI for the year 2008.

304.2 The Control Officer shall adjust the administrative or permit processing fees listed in Sections 301–303 of this rule every January 1, to the nearest $10, beginning on January 1, 2009. The Control Officer will multiply the administrative or permit processing fee by the Consumer Price Index (CPI) for the most recent year as described in Section 304.4 of this rule, and then divide by the CPI for the year 2008.

304.3 The Control Officer shall adjust the rate for emissions-based fees every January 1, beginning on January 1, 2009. The Control Officer will multiply $38.25 by the Consumer Price Index (CPI) for the most recent year as described in Section 304.4, and then divide by the CPI for the year 2008.

304.4 The Consumer Price Index (CPI) for any year is the average of the monthly CPI for all urban consumers published by the United States Department of Labor, as of the close of the 12-month period ending on August 31 of that year.

305 CALCULATION AND PAYMENT OF EMISSIONS-BASED FEES:

305.1 For purposes of this section, actual emissions means the actual quantity of regulated air pollutants emitted over the preceding calendar year or any other period determined by the Control Officer to be representative of normal source operations, determined as follows:

a. Emissions quantities, including fugitive emissions, reported under Rule 100, Section 500 of these rules shall be used for purposes of calculating the emissions-based fee.

b. Actual emissions quantities calculated under Rule 100, Section 500 of these rules shall be determined using the following methods:

(1) Whenever available, emissions estimates shall be calculated from continuous emissions monitors certified under 40 CFR Part 75, Subpart C and referenced appendices, or data quality-assured pursuant to Appendix F of 40 CFR, Part 60 which are incorporated by reference in Appendix G of these rules.

(2) When sufficient data obtained using the methods described in Section 305.1(b)(1) of this rule is not available, emissions estimates shall be calculated from source performance tests conducted pursuant to Rule 270 of these rules.

(3) When sufficient data obtained using the methods described in Sections 305.1(b)(1) or (2) of this rule is not available, emissions estimates shall be calculated from material balance using engineering knowledge of process.

(4) When sufficient data obtained using the methods described in Sections 305.1(b)(1) through (3) of this rule is not available, emissions estimates shall be calculated using emissions factors from EPA Publication No. AP-42 "Compilation of Air Pollutant Emission Factors," Volume I: Stationary Point and Area Sources, which is incorporated by reference in Appendix G of these rules.

(5) When sufficient data obtained using the methods described in Sections 305.1(b)(1) through (4) of this rule is not available, emissions estimates shall be calculated by equivalent methods approved by the Control Officer. The Control Officer shall only approve methods that are demonstrated as accurate and reliable as the applicable methods in Sections 305.1(b)(1) through (4) of this rule.

c. Actual emissions quantities calculated under Section 305.1(b) of this rule shall be determined for each source on the basis of actual operating hours,

production rates, in-place process control equipment, operational process control data, and types of materials processed, stored, or combusted.

305.2 The following emissions of regulated air pollutants shall be excluded from a source's actual emissions for purposes of this section:

a. Emissions of a regulated air pollutant from the source in excess of 4,000 tons per year.

b. Emissions of any regulated air pollutants that are already included in the fee calculation for the source, such as a federally listed hazardous air pollutant that is already accounted for as a VOC or as PM_{10}.

c. Emissions from insignificant activities excluded from the permit for the source under Rule 210 of these rules.

d. Fugitive emissions of PM_{10} from activities other than crushing, belt transfers, screening, or stacking.

e. Fugitive emissions of VOC from solution-extraction units.

305.3 A notice to pay the fee specified in Section 301.2(b) of this rule, a declaration of emissions form and the annual emission inventory questionnaire will be mailed annually to the owner or operator of a source to which this applies. The emission fee is due and payable by April 30 each year or no later than 90 days following the date of notice, whichever is later.

306 **HEARING BOARD FILING FEE:** A person filing a petition with the Hearing Board under Rule 400 of these rules shall pay a fee of $100.00. This fee may be refunded by a majority vote of the Hearing Board upon a showing of undue hardship.

307 **CONDITIONAL ORDER FEE:** Any person applying for a conditional order pursuant to Rule 120 of these rules shall pay a conditional order fee. The amount of a conditional order fee shall be equal to the amount of the applicable permit fee as specified in this rule.

308 **GASOLINE DELIVERY VESSEL DECAL FEE:** A person wishing to obtain a decal for each gasoline delivery vessel that passes the required annual test under Rule 352 of these rules shall pay a fee of $280.00. A person wishing to obtain a replacement decal shall pay a fee of $80.00.

309 **OPEN BURN FEE:**

309.1 **BURN PERMIT FEE:** A person applying for a Burn Permit shall pay a fee as set forth in the following fee schedule:

Fire Category	Permit Period	Fee
Tumbleweeds	30 days	$100.00
Fire Hazard	30 days	$100.00
Fire Fighting Instruction	1 year	$100.00
Ditch Bank/Fence Row	1 year	$100.00
Disease/Pest Prevention	30 days	$100.00
Land Clearance Less than 5.0 Acres	30 days	$150.00
Land Clearance 5.0 Acres or Greater	30 days	$350.00

309.2 AIR CURTAIN DESTRUCTOR BURN PLAN REVIEW AND INSPECTION FEE: Any person required to file an air curtain destructor Burn Plan under the provisions of Rule 314 of these rules shall pay a fee of $350.00.

310 DUST CONTROL PERMIT FEE:

310.1 A person applying for a Dust Control Permit shall pay an annual fee as set forth in the following fee schedule, based on the total surface area that is disturbed.

Total Surface Area Disturbed	Fee
Annual Block Permit	$2,000
0.1 to less than one acre	$795
One acre to less than 10 acres	$1,325
10 acres to less than 50 acres	$3,855
50 acres to less than 100 acres	$6,425
100 acres to less than 500 acres	$9,635
500 acres or greater	$15,415

310.2 DUST CONTROL PERMIT FEE REFUNDS:

a. Refunds Prior to Project Start Date and Prior to Commencement of Dust-Generating Operations: If a Dust Control Permit is cancelled by the permittee prior to the project start date and before commencing any dust-generating operations, the Control Officer shall refund the Dust Control Permit fee, less a $150.00 nonrefundable processing fee.

b. Refunds after Project Start Date and Prior to Commencement of Dust-Generating Operations: If a Dust Control Permit is cancelled by the permittee after the project start date and before commencing any dust-generating operations, the Control Officer shall refund the Dust Control Permit fee, less a $350.00 nonrefundable processing and initial inspection fee.

c. No Dust Control Permit refund shall be given for a Dust Control Permit cancelled by the permittee after commencing any dust-generating operations.

311 DUST CONTROL TRAINING CLASS FEE:

311.1 Basic Dust Control Training Class Fee: A person required to complete basic dust control training shall pay a training class fee of $50.00.

311.2 Comprehensive Dust Control Training Class Fee: A person required to complete comprehensive dust control training shall pay a training class fee of $125.00.

311.3 Requests for Dust Control Training: A person may request that the Control Officer conduct a dust control training class within Maricopa County. A minimum of 10 and a maximum of 30 class participants shall be required and meeting room space shall be provided by the person making the request. The fee for such a training class shall be $35.00 per person for basic dust control training or $100.00 per person for comprehensive dust control training. A discounted fee of $30.00 per person shall be required for issuance of training cards at third-party provider dust control training classes.

311.4 "Train the Trainer" Class Fee: A person taking a "train the trainer" class offered by the Control Officer shall pay a training class fee of $125.00.

312 SUBCONTRACTOR REGISTRATION FEE: A person required to register with the Control Officer under Rule 200 Section 306 of these rules and wishing to obtain a registration number shall pay an annual fee of $50.00.

313 ASBESTOS NOTIFICATION AND PLAN REVIEW FILING FEES: Any person required to file notification under the provisions of Rule 370 of these rules shall pay fees according to the provisions in Sections 313.1 through 313.5 below.

313.1 Renovation: Any person filing notification of a project to renovate regulated asbestos-containing materials (RACM) shall pay a nonrefundable notification and plan review filing fee based on the amount of regulated asbestos-containing materials removed as shown in the table below:

Amount of Regulated Asbestos-Containing Materials (RACM) Removed			
Linear Feet	**Square Feet**	**Cubic Feet**	**Fee***
0–259	0–159	0–34	$0
260–499	160–499	35–109	$600
500 or more	500 or more	110 or more	$1,770

* If materials are reported on the notification in more than one category, the higher fee will apply.

313.2 Demolition: Any person filing notification of a project to demolish a facility (as defined in 40 CFR 61, Subpart M) shall pay a nonrefundable notification and plan review filing fee of $600.00.

313.3 For projects involving both renovation and demolition activities in a single notification, separate fees for each activity will apply according to Sections 313.1 and 313.2 of this rule.

313.4 When a revision to a notification involves an increase in the RACM, the difference between the fee for the original RACM and the revised RACM shall be paid.

313.5 **Annual Operation and Maintenance:** Any person filing an annual notification of planned renovation operations involving individual nonscheduled operations to renovate regulated asbestos-containing materials shall pay a nonrefundable notification and plan review filing fee of $1,250.00.

314 **LATE FEE:** The Control Officer shall assess the following fees in addition to all other applicable fees:

314.1 **TITLE V, NON-TITLE V, OR GENERAL PERMIT:** An owner/operator of a source requiring a permit who has received a Notice of Violation for constructing or operating without such permit shall pay a late fee of $100.00.

314.2 **DUST CONTROL PERMIT:** Any person who is engaging in dust-generating operations without a Dust Control Permit and has received a Notice of Violation for engaging in dust-generating operations without a Dust Control Permit shall pay a late fee of $100.00.

315 **DELINQUENCY FEE:** An applicant or permittee who fails to pay any required fee(s) by 30 days after the invoice due date shall pay a delinquency fee of $50.00 or a delinquency fee of $100.00 if delinquent over 60 days from the invoice due date. Applicants and permittees will be notified by mail of any permit delinquency fees that are due and payable.

316 **SUBSCRIPTION FEE FOR RULE REVISIONS:** A person requesting to be placed on a mailing list to receive copies of new and revised rules shall pay to the Control Officer an annual subscription fee of $35.00.

317 **ACCELERATED PERMIT PROCESSING FEE:** An applicant requesting accelerated permit processing shall pay fees to the Control Officer according to the following provisions:

317.1 Such a request shall be accompanied by an initial fee of $15,000. The fee is nonrefundable to the extent of the Control Officer's costs for accelerating the processing if the Control Officer undertakes to provide accelerated processing as described in Rule 200, Section 313 of these rules.

317.2 At any time after an applicant has requested accelerated permit processing, the Control Officer may request an additional advance payment fee based on the most recent estimated cost of accelerating the processing of the application.

317.3 Upon completion of permit processing activities but before issuing or denying a permit or permit revision, the Control Officer shall send notice of the decision to the applicant along with a final invoice. The final invoice shall include all regular permit processing and other fees due, as well as the difference between the actual cost of accelerating the permit application, including any costs incurred by the Control Officer in contracting for, hiring, or supervising the work of outside consultants, and all advance payments submitted for accelerated processing. In the event all payments made exceed actual accelerated permit costs, the Control Officer shall refund the excess advance payments.

317.4 Any additional costs incurred as a result of accelerated permit processing shall not be applied toward any applicable maximum fee described in this rule.

318 FAILURE TO PAY REQUIRED FEES: Nonpayment of fees required by this rule constitutes a violation as provided in A.R.S. §§ 49-502, 49-511 and 49-513.

319 INFORMAL REVIEW OF PERMIT PROCESSING HOURS:

319.1 Any person who receives a final itemized invoice from the Control Officer under Section 301.1 or 302.1 of this rule for a billable permit action may request an informal review of the permit processing hours billed and may pay the invoice under protest as provided below. If the invoice is paid under protest, the Control Officer shall issue the permit.

319.2 The request for an informal review of the permit processing hours billed shall be made in writing, and received by the Control Officer within 30 days of the invoice date. Unless the Control Officer and person agree otherwise, the informal review shall take place within 30 days after the Control Officer's receipt of the request. The Control Officer shall arrange the date and location of the informal review with the person at least 10 business days before the informal review. The Control Officer shall review whether the amounts of time billed are correct and reasonable for the tasks involved. The Control Officer shall mail his or her decision on the informal review to the person within 10 business days after the informal review date. The Control Officer's decision after the informal review shall be final.

320 HAZARDOUS AIR POLLUTANTS TIER 4 RISK MANAGEMENT ANALYSIS FEE: If an applicant uses the Tier 4 method for conducting a risk management analysis (RMA) according to Rule 372 of these rules, the applicant shall pay any costs incurred by the Control Officer in contracting for, hiring or supervising work of outside consultants.

321 AIR QUALITY AWARENESS FLAG PROGRAM FEE: A person who elects to participate in the air quality awareness flag program may obtain program materials from the Control Officer for a fee of $200.00.

SECTION 400 – ADMINISTRATIVE REQUIREMENTS

401 EFFECTIVE DATE OF FEES: The fees in this rule became effective May 1, 2008, except for the emissions-based fee, the air curtain destructor application fee, the Dust Control Permit fee, the "train the trainer" class fee, the air quality awareness flag program fee, and the asbestos notification and plan review filing fees. The emissions-based fee became effective January 1, 2009, beginning with the emissions reported for calendar year 2008. The air curtain destructor application fee, the Dust Control Permit fee, the "train the trainer" class fee, the air quality awareness flag program fee, and the asbestos notification and plan review filing fees become effective July 1, 2010.

402 PAYMENT OF FEES: All fees required by this rule are payable to Maricopa County Air Quality Department.

402.1 Annual Administrative Fees:

a. Title V and Non-Title V Permits: The Control Officer shall mail the owner or operator of a Title V or Non-Title V source an invoice for the annual administrative fee due under Sections 301.2 and 302.2 of this rule at least 30 days prior to the anniversary date of the permit.

b. General Permits: The Control Officer shall mail the owner or operator of a source authorized to operate under a General Permit an invoice for the annual administrative fee due under Section 303.2 of this rule at least 30 days prior to the anniversary date of the authorization to operate.

402.2 Gasoline Delivery Vessel Decal Fee: Gasoline delivery vessel decal fee shall be paid at the time the application is submitted showing satisfactory test results and prior to the issuance of the decal required in the provisions of Rule 352 of these rules.

402.3 Asbestos Removal Notification and Plan Review Filing Fee: The asbestos notification and plan review filing fee shall be paid at the time the notification is submitted. The notification is not considered filed until the appropriate filing fee is paid.

402.4 Other Fees: Other fees shall be paid in the manner and at the time required by the Control Officer.

402.5 Fees in Effect: All fees charged as a result of this rule shall be paid at the rate or in the amount that is in effect on the date the fee is charged.

402.6 Payment Applied to Delinquent Penalties and Fees: All monies paid to the Control Officer shall first be applied to any delinquent penalties and fees owed by the owner or operator of a source before being applied to current charges.

403 FEE TABLE A, B, C, D, E, F, G, H, AND I SOURCES: Fee Tables A– I list processes and equipment subject to the fees outlined in Sections 302.2, 303.1, and 303.2 of this rule. For processes and equipment not listed below, the Control Officer will designate Fee Table A, B, C, D, E, F, G, H or I, as applicable. Sources reclassified to a higher fee table due to the receipt of three complaints on different dates during a one-year period from different individuals resulting in violations resolved by an order of abatement by consent or judicial action shall remain in that fee table until two calendar years pass without complaints against the facility resulting in violations resolved by an order of abatement by consent or judicial action.

403.1 Fee Table A Sources:

Aircraft Manufacturing
Chemical Manufacturing, Dry
Chemical Manufacturing, Liquid
Circuit Board Manufacturing Greater than or Equal to 5 Tons per Year VOC
Coating Line, Can/Coil/Fabric/Film/Glass/Paper
Ethylene Oxide Sterilization
Gypsum, Calcining
Incinerator, Medical Waste
Incinerator, Hazardous Material
Insulation Manufacturing
Jet or Auxiliary Engine Manufacturing
Non-Major Title V Source
Pesticide/Herbicide Production
Petroleum Loading Racks and Storage Tanks at Bulk Terminals
Pharmaceutical Manufacturing
Polymeric Foam Products Greater than or Equal to 25 Tons per Year Potential Uncontrolled VOC Emissions or Facility with Controls Subject to Source Testing
Power Plant Greater than or Equal to 25 Tons per Year Potential Uncontrolled NO_X Emissions
Printing Facilities Greater than or Equal to 25 Tons per Year Potential Uncontrolled VOC Emissions or Facility with Controls Subject to Source Testing
Rendering
Rubber Products Manufacturing
Semiconductor Manufacturing Less than 25 Tons per Year of Potential Uncontrolled VOC Emissions
Solid Waste Landfill
Source Subject to BACT Determination
Source Subject to a MACT, NESHAP or NSPS Standard under CAA Section 111 or 112 Unless Otherwise Identified in another Fee Table

Source with 3 or More Fee Table B Processes
Vegetable Oil Extraction

403.2 Fee Table B Sources:

Aerospace Products Manufacturing and Rework not Subject to MACT
Aggregate Screening
Animal Feed Processing
Auto Body Shredding
Bakery with Oven of Greater than or Equal to 25 Tons per Year of Potential Uncontrolled VOC Emissions or Facility with Controls
Boiler, Gas-Fired or with Emergency Fuel Capabilities (Each Unit Greater than or Equal to 10 MMbtu/hr)
Chemical/Fertilizer Storage, Mixing, Packaging and Handling
Concrete Product Manufacturing
Cement Terminal
Cotton Gin
Cotton Seed Processing
Crematory
Cultured Marble
Fiberglass Product Manufacturing
Flour Milling
Foundry
Furnace, Metals
Furnace, Burn-Off
Furnace, Electric Arc
Furnace, Other
Gas Turbine, Non-Utility (Utility in Fee Table A)
Grain Cleaning/Processing
Grain Storage
Incinerator, Non-Hazardous Material
Internal Combustion Engine, Other than Emergency
Metal Recovery/Reclamation
Pipeline Transmission Facility
Plating Tanks, Electrolytic or Electrowinning (Includes Decorative Chrome and Hard Chrome Operations Less than or Equal to 60 Million Amp/Hrs per Year Subject to Area Source MACT)
Polymeric Foam Products Less than 25 Tons per Year Potential Uncontrolled VOC Emissions
Power Plant Less than 25 Tons per Year Potential Uncontrolled NO_X Emissions
Reinforced Plastics
Rubber Products Manufacturing with Only Molding
Soil Treatment/Remediation
Soil Solvent Extraction System with Package Thermal/Catalytic Oxidizer/Carbon Adsorption
Solvent Degreasing/Cleaning System, Solvent Use Greater than 3 Gallons per Day

Solvent Reclaiming
Source with 3 or More Fee Table C Processes
Stage I Vapor Recovery, Bulk Plants with Loading Racks
Stripping Operation, Equipment or Furniture Refurbishment
Tire Shredding/Retreading
Wastewater Treatment Plant
Wood Coating Operation Subject to RACT Including Furniture/Millwork Sources Larger than 10 Tons per Year VOC
Any Fee Table A, F, or G Source whose Aggregate of All Equipment, Processes or Production Lines Has Enforceable Permit Limits of Less than 2.0 Tons per Year VOC or NO_X, and Less than 1.0 Ton per Year PM_{10}
Any Fee Table C Source that Receives 3 Complaints on Different Dates During a One-Year Period from Different Individuals Resulting in Violations Resolved by an Order of Abatement by Consent or Judicial Action

403.3 Fee Table C Sources:

Abrasive Blasting
Asphalt Day Tanker/Kettle
Cement Products Packaging/Distribution
Circuit Board Assembly
Circuit Board Manufacturing Less than 5 Tons per Year of VOC
Dry Cleaning (Includes Perchloroethylene Dry Cleaning Facilities Subject to Area Source MACT)
Emergency Internal Combustion Engine
Engine Testing
Food Processing
Incinerator, Paper and Cardboard Products
Injection Molding
Landscape and Decorative Rock, Gravel, and Sand Distribution
Laundry, Other than Dry Cleaning
Miscellaneous Acid/Solvent Use
Packaging, Mixing and Handling, Granular or Powdered Material Other than Cement or Grain
Petroleum Storage, Non-Retail Dispensing Operations Exempted from Stage I Vapor Recovery by Rule 353
Plastic or Metal Extrusion
Plating, Electroless
Powder Coating
Printing Facilities Less than 25 Tons per Year of Potential Uncontrolled VOC Emissions
Semiconductor Lab/Testing/Services
Non-Halogenated Solvent Cleaning, Less than 3 Gallons per Day
Solvent Storage/Handling
Spray Coating
Bulk Plant Loading Facilities as Defined by Rule 351, Section 305.1
Storage Tank, Non-Petroleum Volatile Organic Compounds

Stripping Operation, Liquid Chemical Groundwater/Wastewater Remediation
Vehicle Refinishing
Waste Transfer Facility
Water Reclamation
Sewage Lift Pump Station
Drinking Water Plant
Wood Furniture/Millwork/Small Source Less than 10 Tons per Year VOC
Yard/Stockpiling

403.4 Fee Table D Sources:
Service Station and Non-Resale Dispensing Operations Greater than 120,000 Gallons per Year

403.5 Fee Table E Sources:
Fuel Burning Equipment

403.6 Fee Table F Sources:
Aggregate Production/Crushing Subject to an NSPS under CAA Section 111
Hot Mix Asphalt Plants

403.7 Fee Table G Sources:
Aggregate Production/Crushing not Subject to NSPS under CAA Section 111
Concrete Batch Plant

403.8 Fee Table H Sources:
Semiconductor Manufacturing Greater than or Equal to 25 Tons per Year Potential Uncontrolled VOC Emissions or Facility with Controls Subject to Source Testing
Any Fee Table A or G Source that Receives 3 Complaints on Different Dates During a One-Year Period from Different Individuals Resulting in Violations Resolved by an Order of Abatement by Consent or Judicial Action

403.9 Fee Table I Sources:
Any Fee Table B Source that Receives 3 Complaints on Different Dates During a One-Year Period from Different Individuals Resulting in Violations Resolved by an Order of Abatement by Consent or Judicial Action

SECTION 500 – MONITORING AND RECORDS (NOT APPLICABLE)

REGULATION III – CONTROL OF AIR CONTAMINANTS

RULE 300
VISIBLE EMISSIONS

INDEX

SECTION 100 – GENERAL

101 PURPOSE

102 APPLICABILITY

SECTION 200 – DEFINITIONS

201 OPACITY

202 PERCENT OPACITY

203 SHUTDOWN

204 STARTUP

205 UNCOMBINED WATER

SECTION 300 – STANDARDS

301 LIMITATIONS

302 EXCEPTIONS

SECTION 400 – ADMINISTRATIVE REQUIREMENTS (NOT APPLICABLE)

SECTION 500 – MONITORING AND RECORDS

501 COMPLIANCE DETERMINATION-OPACITY

Revised 07/13/88
Revised 08/05/94
Revised 02/07/01
Revised 03/12/08

MARICOPA COUNTY
AIR POLLUTION CONTROL REGULATIONS
REGULATION III – CONTROL OF AIR CONTAMINANTS

RULE 300
VISIBLE EMISSIONS

SECTION 100 – GENERAL

101 **PURPOSE:** To limit the emission of air contaminants into the ambient air by establishing standards for visible emissions and opacity.

102 **APPLICABILITY:** This rule applies to visible emissions from sources for which no source-specific opacity requirements apply. Exceptions to this rule are described in Section 302 of this rule.

SECTION 200 – DEFINITIONS: For the purpose of this rule, the following definitions shall apply. See Rule 100-General Provisions and Definitions of these rules for definitions of terms that are used but not specifically defined in this rule.

201 **OPACITY –** A condition of the ambient air, or any part thereof, in which an air contaminant partially or wholly obscures the view of an observer.

202 **PERCENT OPACITY –** The degree to which an effluent plume or any other emission of air contaminants obscures the transmission of light expressed as a percentage.

203 **SHUTDOWN –** The cessation of operation of any air pollution control equipment and/or process equipment for any purpose, except routine phasing out of process equipment.

204 **STARTUP –** The setting into operation of any air pollution control equipment and/or process equipment for any purpose, except routine phasing in of process equipment.

205 **UNCOMBINED WATER –** Condensed water containing no more than analytical trace amounts of other chemical elements or compounds.

SECTION 300 – STANDARDS

301 **LIMITATIONS:** No person shall discharge into the ambient air from any single source of emissions any air contaminant, other than uncombined water, in excess of 20% opacity for a period aggregating more than three minutes in any 60-minute period.

302 EXCEPTIONS:

302.1 Charging Electric Arc Furnaces: When charging or back-charging any electric arc furnace for which construction commenced prior to February 2, 1963, a person may discharge air contaminants, other than uncombined water, in excess of the applicable opacity limit in Section 301 of this rule for no more than an aggregate of three minutes in any 45-minute period; however, visible emissions resulting from such discharge of air contaminants shall not exceed 40% opacity.

302.2 Emergency Diesel Generators (EDGs) and Equipment: When emergency diesel generators (EDGs) and equipment must run for safety reasons and/or for safety and operational tests to meet the requirements legally imposed by the Nuclear Regulatory Commission, a person may discharge air contaminants, other than uncombined water, in excess of the applicable opacity limit in Section 301 of this rule. Any discharge of air contaminants, other than uncombined water, in excess of the opacity limit in Section 301 of this rule should not contribute to a violation of the National Ambient Air Quality Standard.

302.3 Firing of Ordnance at Test Facilities: Visible emissions exceeding the opacity standards for short periods of time resulting from firing test rounds in enclosed bunkers at ordnance test facilities which do not exceed six minutes in length shall not constitute a violation of Section 301 of this rule.

302.4 Opacity Training: Equipment or processes used to train individuals in opacity observations shall be exempt from opacity standards during the preparation for and/or during the actual training session(s).

SECTION 400 – ADMINISTRATIVE REQUIREMENTS (NOT APPLICABLE)

SECTION 500 – MONITORING AND RECORDS

501 COMPLIANCE DETERMINATION – OPACITY: Opacity shall be determined by observations of visible emissions conducted in accordance with EPA Reference Method 9 as modified by EPA Reference Method 203B.

REGULATION III – CONTROL OF AIR CONTAMINANTS

RULE 310
FUGITIVE DUST FROM DUST-GENERATING OPERATIONS

INDEX

SECTION 100 – GENERAL

101 PURPOSE

102 APPLICABILITY

103 EXEMPTIONS

SECTION 200 – DEFINITIONS

201 AREA A

202 AREA ACCESSIBLE TO THE PUBLIC

203 BULK MATERIAL

204 BULK MATERIAL HANDLING, STORAGE, AND/OR TRANSPORTING OPERATION

205 CONTROL MEASURE

206 DISTURBED SURFACE AREA

207 DUST CONTROL IMPLEMENT

208 DUST CONTROL PLAN

209 DUST-GENERATING OPERATION

210 DUST SUPPRESSANT

211 EARTHMOVING OPERATION

212 EMERGENCY

213 EMERGENCY ACTIVITY

214 END OF WORKDAY

215 FREEBOARD

216 FUGITIVE DUST

217 GRAVEL PAD

218 GRIZZLY

219 HAUL TRUCK

220 MOTOR VEHICLE

221 NORMAL FARM CULTURAL PRACTICE

222 OFF-ROAD VEHICLE

223 OPEN STORAGE PILE

224 OWNER AND/OR OPERATOR

225 PAVE

226 PROPERTY LINE

227 ROUTINE

228 SILT

229 TRACKOUT/CARRYOUT

230 TRACKOUT CONTROL DEVICE

231 UNPAVED HAUL/ACCESS ROAD

232 UNPAVED PARKING LOT

233 UNPAVED ROAD

234 WIND-BLOWN DUST

235 WORK SITE

SECTION 300 – STANDARDS

301 GENERAL REQUIREMENTS FOR DUST-GENERATING OPERATIONS

302 PERMIT REQUIREMENTS FOR DUST-GENERATING OPERATIONS

303 VISIBLE EMISSIONS REQUIREMENTS FOR DUST-GENERATING OPERATIONS

304 STABILIZATION REQUIREMENTS FOR DUST-GENERATING OPERATIONS

305 CONTROL MEASURES FOR DUST-GENERATING OPERATIONS

306 TRACKOUT, CARRY-OUT, SPILLAGE, AND/OR EROSION

307 SOIL MOISTURE

308 PROJECT INFORMATION SIGN FOR DUST-GENERATING OPERATIONS

309 DUST CONTROL TRAINING CLASSES FOR DUST-GENERATING OPERATIONS

310 DUST CONTROL COORDINATOR FOR DUST-GENERATING OPERATIONS

SECTION 400 – ADMINISTRATIVE REQUIREMENTS

401 DUST CONTROL PERMIT REQUIREMENTS

402 DUST CONTROL PLAN REQUIREMENTS

403 DUST CONTROL PLAN REVISIONS

404 DUST CONTROL BLOCK PERMIT REQUIREMENTS

405 APPROVAL OR DENIAL OF PERMIT APPLICATIONS FOR DUST-GENERATING OPERATIONS

406 TERMS FOR PERMITS FOR DUST-GENERATING OPERATIONS

407 DEFACING, ALTERING, FORGING, COUNTERFEITING, OR FALSIFYING PERMITS FOR DUST-GENERATING OPERATIONS

408 FEES FOR PERMITS FOR DUST-GENERATING OPERATIONS

409 POSTING OF PERMITS FOR DUST-GENERATING OPERATIONS

410 COMPLIANCE SCHEDULE

SECTION 500 – MONITORING AND RECORDS

501 COMPLIANCE DETERMINATION

502 RECORDKEEPING

503 RECORDS RETENTION

504 TEST METHODS ADOPTED BY REFERENCE

Revised 07/13/88
Revised 07/06/93
Revised 09/20/94
Revised 06/16/99
Revised 02/16/00
Revised 04/07/04
Revised 03/26/08
Revised 01/27/10

MARICOPA COUNTY
AIR POLLUTION CONTROL REGULATIONS
REGULATION III – CONTROL OF AIR CONTAMINANTS

RULE 310
FUGITIVE DUST FROM DUST-GENERATING OPERATIONS

SECTION 100 – GENERAL

101 **PURPOSE:** To limit particulate matter (PM_{10}) emissions into the ambient air from any property, operation or activity that may serve as a fugitive dust source. The effect of this rule shall be to minimize the amount of PM_{10} entrained into the ambient air as a result of the impact of human activities by requiring measures to prevent, reduce, or mitigate particulate matter emissions.

102 **APPLICABILITY:** The provisions of this rule shall apply to all dust-generating operations except for those dust-generating operations listed in Section 103 of this rule.

103 **EXEMPTIONS:**

103.1 The provisions of this rule shall not apply to normal farm cultural practices according to Arizona Revised Statutes (A.R.S.) § 49-457 and A.R.S. § 49-504.4.

103.2 The provisions of this rule shall not apply to the following non-traditional sources of fugitive dust that are located at sources that do not require any permit under these rules. These non-traditional sources of fugitive dust are subject to the standards and/or requirements described in Rule 310.01: Fugitive Dust from Non-Traditional Sources of Fugitive Dust of these rules:

a. Vehicle use in open areas and vacant lots.

b. Open areas and vacant lots.

c. Unpaved parking lots.

d. Unpaved roadways (including alleys).

e. Livestock activities.

f. Erosion-caused deposition of bulk materials onto paved surfaces.

g. Easements, rights-of-way, and access roads for utilities (transmission of electricity, natural gas, oil, water, and gas).

103.3 The provisions of this rule shall not apply to emergency activities that may disturb the soil conducted by any utility or government agency in order to prevent public injury or to restore critical utilities to functional status.

103.4 The provisions of this rule do not apply to the establishment of initial landscapes without the use of mechanized equipment, conducting landscape maintenance without the use of mechanized equipment, and playing on or maintaining a field used for non-motorized sports. However, establishing initial landscapes without the use of mechanized equipment and conducting landscape maintenance without the use of mechanized equipment shall not include grading, or trenching performed to establish initial landscapes or to redesign existing landscapes.

103.5 The provisions of this rule shall not apply to rooftop operations for cutting, drilling, grinding, or coring roofing tile when such activity is occurring on a pitched roof.

SECTION 200 – DEFINITIONS: For the purpose of this rule, the following definitions apply, in addition to those definitions found in Rule 100: General Provisions and Definitions of these rules. In the event of any inconsistency between any of the Maricopa County air pollution control rules, the definitions in this rule take precedence.

201 **AREA A –** As defined in A.R.S. § 49-541(1), the area in Maricopa County delineated as follows:

Township 8 North, Range 2 East and Range 3 East
Township 7 North, Range 2 West through Range 5 East
Township 6 North, Range 5 West through Range 6 East
Township 5 North, Range 5 West through Range 7 East
Township 4 North, Range 5 West through Range 8 East
Township 3 North, Range 5 West through Range 8 East
Township 2 North, Range 5 West through Range 8 East
Township 1 North, Range 5 West through Range 7 East
Township 1 South, Range 5 West through Range 7 East
Township 2 South, Range 5 West through Range 7 East
Township 3 South, Range 5 West through Range 1 East
Township 4 South, Range 5 West through Range 1 East

202 **AREA ACCESSIBLE TO THE PUBLIC –** Any paved parking lot or paved roadway that can be entered or used for public travel primarily for purposes unrelated to the dust-generating operation.

203 **BULK MATERIAL –** Any material, including, but not limited to, the following materials that are capable of producing fugitive dust:

203.1 Earth.
203.2 Rock.
203.3 Silt.
203.4 Sediment.
203.5 Sand.
203.6 Gravel.
203.7 Soil.
203.8 Fill.
203.9 Aggregate less than 2 inches in length or diameter (i.e., aggregate base course [ABC]).
203.10 Dirt.
203.11 Mud.
203.12 Demolition debris.
203.13 Cotton.
203.14 Trash.
203.15 Cinders.
203.16 Pumice.
203.17 Sawdust.
203.18 Feeds.
203.19 Grains.
203.20 Fertilizers.
203.21 Fluff from shredders.
203.22 Dry concrete.

204 **BULK MATERIAL HANDLING, STORAGE, AND/OR TRANSPORTING OPERATION –** The use of equipment, haul trucks, and/or motor vehicles, including, but not limited to, for the following activities that are capable of producing fugitive dust:

204.1 Loading.
204.2 Unloading.
204.3 Conveying.
204.4 Transporting.
204.5 Piling.
204.6 Stacking.
204.7 Screening.
204.8 Grading.
204.9 Moving bulk materials.

205 **CONTROL MEASURE –** A technique, practice, or procedure used to prevent or minimize the generation, emission, entrainment, suspension, and/or airborne transport of fugitive dust. Control measures include, but are not limited to:

205.1 Curbing;
205.2 Paving;
205.3 Pre-watering;
205.4 Applying dust suppressants;
205.5 Physically stabilizing with vegetation, gravel, recrushed/recycled asphalt or other forms of physical stabilization;
205.6 Limiting, restricting, phasing and/or rerouting motor vehicle access;
205.7 Reducing vehicle speeds and/or number of vehicle trips;
205.8 Limiting use of off-road vehicles on open areas and vacant lots;
205.9 Utilizing work practices and/or structural provisions to prevent wind and water erosion onto areas accessible to the public;
205.10 Appropriately using dust control implements;
205.11 Installing one or more grizzlies, gravel pads, and/or wash down pads adjacent to the entrance of an area accessible to the public to control carry-out and trackout;
205.12 Keeping open-bodied haul trucks in good repair, so that spillage may not occur from beds, sidewalls, and tailgates; and
205.13 Covering the cargo beds of haul trucks to minimize wind-blown dust emissions and spillage.

206 **DISTURBED SURFACE AREA –** A portion of the earth's surface or material placed on the earth’s surface that has been physically moved, uncovered, destabilized, or otherwise modified from its undisturbed native condition if the potential for the emission of fugitive dust is increased by the movement, destabilization, or modification.

207 **DUST CONTROL IMPLEMENT –** A tool, machine, equipment, accessory, structure, enclosure, cover, material or supply, including an adequate readily available supply of water and its associated distribution/delivery system, used to control fugitive dust emissions.

208 **DUST CONTROL PLAN –** A written plan describing all control measures to be implemented and maintained in order to prevent or minimize the generation, emission, entrainment, suspension, and/or airborne transport of fugitive dust.

209 **DUST-GENERATING OPERATION –** Any activity capable of generating fugitive dust, including, but not limited to, the following activities:

209.1 Land clearing, maintenance, and land clean-up using mechanized equipment.
209.2 Earthmoving.
209.3 Weed abatement by discing or blading.
209.4 Excavating.
209.5 Construction.

209.6 Demolition.
209.7 Bulk material handling (e.g., bulk material hauling and/or transporting, bulk material stacking, loading, and unloading operations).
209.8 Storage and/or transporting operations (e.g., open storage piles).
209.9 Operation of any outdoor equipment.
209.10 Operation of motorized machinery.
209.11 Establishing and/or using staging areas, parking areas, material storage areas, or access routes to and from a site.
209.12 Establishing and/or using unpaved haul/access roads to, from, and within a site.
209.13 Disturbed surface areas associated with a site.
209.14 Installing initial landscapes using mechanized equipment.

210 **DUST SUPPRESSANT** – Water, hygroscopic material, solution of water and chemical surfactant, foam, non-toxic chemical stabilizer or any other dust palliative, which is not prohibited for ground surface application by the U.S. Environmental Protection Agency (EPA) or the Arizona Department of Environmental Quality (ADEQ) or any applicable law, rule, or regulation, as a treatment material for reducing fugitive dust emissions.

211 **EARTHMOVING OPERATION** – The use of any equipment for an activity that may generate fugitive dust, such as but not limited to, the following activities:

211.1 Cutting and filling.
211.2 Grading.
211.3 Leveling.
211.4 Excavating.
211.5 Trenching.
211.6 Loading or unloading of bulk materials.
211.7 Demolishing.
211.8 Blasting.
211.9 Drilling.
211.10 Adding bulk materials to or removing bulk materials from open storage piles.
211.11 Back filling.
211.12 Soil mulching.
211.13 Landfill operations.
211.14 Weed abatement by discing or blading.

212 **EMERGENCY –** A situation arising from sudden and reasonably unforeseeable events beyond the control of the source, including acts of God, which situation requires immediate corrective action to restore normal operation, and that causes the source to exceed a limitation in this rule, due to unavoidable increases in emissions attributable to the emergency. An emergency shall not include any noncompliance due to improperly designed equipment, lack of preventative maintenance, careless or improper operation, or operator error.

213 **EMERGENCY ACTIVITY –** Repairs that are a result of an emergency which prevents or hinders the provision of electricity, the distribution/collection of water, and the

availability of other utilities due to unforeseen circumstances that are beyond the routine maintenance and repair due to normal wear conducted by a utility or municipality.

214 **END OF WORKDAY –** The end of a working period that may include one or more work shifts. If working 24 hours a day, the end of a working period shall be considered no later than 8 pm.

215 **FREEBOARD –** The vertical distance between the top edge of a cargo container area and the highest point at which the bulk material contacts the sides, front, and back of a cargo container area.

216 **FUGITIVE DUST –** The particulate matter not collected by a capture system, that is entrained in the ambient air, and is caused from human and/or natural activities, such as, but not limited to, the movement of soil, vehicles, equipment, blasting, and wind. For the purpose of this rule, fugitive dust does not include particulate matter emitted directly from the exhaust of motor vehicles and other internal combustion engines, from portable brazing, soldering, or welding equipment, and from piledrivers, and does not include emissions from process and combustion sources that are subject to other rules in Regulation III (Control of Air Contaminants) of these rules.

217 **GRAVEL PAD –** A layer of washed gravel, rock, or crushed rock that is at least one inch or larger in diameter, that is maintained at the point of intersection of an area accessible to the public and a work site exit to dislodge mud, dirt, and/or debris from the tires of motor vehicles and/or haul trucks, prior to leaving the work site. Minimum dimensions must be 30 feet wide by 3 inches deep and 50 feet long, or the length of the longest haul truck, whichever is greater. If an unpaved surface exit does not have adequate width to install a 30-foot wide gravel pad, then the width of the gravel pad must cover the full width of the unpaved surface exit and such shorter width must be adequate to prevent trackout.

218 **GRIZZLY –** A device (i.e., rails, pipes, or grates) used to dislodge mud, dirt, and/or debris from the tires and undercarriage of motor vehicles and/or haul trucks prior to leaving the work site.

219 **HAUL TRUCK –** Any fully or partially open-bodied self-propelled vehicle including any non-motorized attachments, such as, but not limited to, trailers or other conveyances that are connected to or propelled by the actual motorized portion of the vehicle used for transporting bulk materials.

220 **MOTOR VEHICLE –** A self-propelled vehicle for use on the public roads and highways of the State of Arizona and required to be registered under the Arizona State Uniform Motor Vehicle Act, including any non-motorized attachments, such as but not limited to, trailers or other conveyances which are connected to or propelled by the actual motorized portion of the vehicle.

221 **NORMAL FARM CULTURAL PRACTICE –** All activities by the owner, lessee, agent, independent contractor, and/or supplier conducted on any facility for the production of crops and/or nursery plants. Disturbances of the field surface caused by turning under stalks, tilling, leveling, planting, fertilizing, or harvesting are included in this definition.

222 **OFF-ROAD VEHICLE –** Any self-propelled conveyance specifically designed for off-road use, including, but not limited to, off-road or all-terrain equipment, trucks, cars, motorcycles, motorbikes, or motorbuggies.

223 **OPEN STORAGE PILE –** Any accumulation of bulk material with a 5% or greater silt content that has a total surface area of 150 square feet or more and that at any one point attains a height of three feet. Silt content shall be assumed to be 5% or greater unless a person can show, by testing in accordance with ASTM Method C136-06 or other equivalent method approved in writing by the Control Officer and the Administrator, that the silt content is less than 5%.

224 **OWNER AND/OR OPERATOR –** The person including, but not limited to, the property owner, lessee, developer, responsible official, Dust Control permit applicant (who may also be the responsible party contracting to do the work), general contractor, prime contractor, supervisor, management company, or any person who owns, leases, operates, controls, or supervises a dust-generating operation subject to the requirements of this rule.

225 **PAVE –** To apply and maintain asphalt, concrete, or other similar material to a roadway surface (i.e., asphaltic concrete, concrete pavement, chip seal, or rubberized asphalt).

226 **PROPERTY LINE –** The boundaries of an area in which either a person causing the emission or a person allowing the emission has the legal use or possession of the property. Where such property is divided into one or more sub-tenancies, the property line(s) shall refer to the boundaries dividing the areas of all sub-tenancies.

227 **ROUTINE –** Any dust-generating operation which occurs more than 4 times per year or lasts 30 cumulative days or more per year.

228 **SILT –** Any aggregate material with a particle size less than 75 micrometers in diameter, which passes through a No. 200 sieve.

229 **TRACKOUT/CARRYOUT –** Any and all bulk materials that adhere to and agglomerate on the surfaces of motor vehicles, haul trucks, and/or equipment (including tires) and that have fallen or been deposited onto an area accessible to the public.

230 **TRACKOUT CONTROL DEVICE –** A gravel pad, grizzly, wheel wash system, or a paved area, located at the point of intersection of an unpaved area and an area accessible to the public that controls or prevents vehicular trackout.

231 UNPAVED HAUL/ACCESS ROAD – Any on-site unpaved road used by commercial, industrial, institutional, and/or governmental traffic.

232 UNPAVED PARKING LOT – Any area that is not paved and that is designated for parking in the Dust Control Plan or that is used for parking, maneuvering, material handling, or storing motor vehicles and equipment. An unpaved parking lot includes, but is not limited to, automobile impound yards, wrecking yards, automobile dismantling yards, salvage yards, material handling yards, and storage yards. For the purpose of this rule, maneuvering shall not include military maneuvers or exercises conducted on federal facilities.

233 UNPAVED ROAD – Any road or equipment path that is not paved. For the purpose of this rule, an unpaved road is not a horse trail, hiking path, bicycle path, or other similar path used exclusively for purposes other than travel by motor vehicles.

234 WIND-BLOWN DUST – Visible emissions, from any disturbed surface area, that are generated by wind action alone.

235 WORK SITE – Any property upon which any dust-generating operations occur.

SECTION 300 – STANDARDS

301 GENERAL REQUIREMENTS FOR DUST-GENERATING OPERATIONS:

301.1 Any person engaged in a dust-generating operation subject to this rule shall be subject to the standards and/or requirements of this rule before, after, and while conducting such dust-generating operation, including during weekends, after work hours, and on holidays.

301.2 For the purpose of this rule, any control measure that is implemented must achieve the applicable standard(s) described in this rule, as determined by the corresponding test method(s), as applicable, and must achieve other applicable standard(s) set forth in this rule.

301.3 Control measures described in Section 305 of this rule. Regardless of whether a dust-generating operation is in compliance with an approved Dust Control Plan or there is no approved Dust Control Plan, the owner and/or operator of a dust-generating operation shall be subject to all requirements of this rule at all times.

301.4 Failure to comply with the provisions of this rule, as applicable, and/or of an approved Dust Control Plan, shall constitute a violation.

302 PERMIT REQUIREMENTS FOR DUST-GENERATING OPERATIONS:

302.1 No person shall commence construction of, operate, or make a modification to any dust-generating operation when such dust-generating operations disturb a

total surface area of 0.10 acre (4,356 square feet) or more without first obtaining a permit or permit revision from the Control Officer.

302.2 No person shall commence construction of, operate, or make a modification to any dust-generating operation that disturbs a total surface area of less than 0.10 acre (4,356 square feet) under common control that are either contiguous or separated only by a public or private roadway and that cumulatively equal or exceed 0.10 acre in area without first obtaining a permit or permit revision from the Control Officer.

302.3 No person shall commence any routine dust-generating operation that disturbs a surface area of 0.10 acre or greater at a site that has obtained or must obtain a Title V, Non-Title V, or General permit under Regulation II (Permits and Fees) of these rules without first submitting to the Control Officer a Dust Control Plan.

302.4 The property owner, lessee, developer, responsible official, Dust Control permit applicant (who may also be the responsible party contracting to do the work), general contractor, prime contractor, supervisor, management company, or any person who owns, leases, operates, controls, or supervises a dust-generating operation subject to the requirements of this rule shall be responsible for obtaining a permit or permit revision from the Control Officer.

302.5 All permit applications shall be filed in the manner and form prescribed by the Control Officer, which includes, but is not limited to, the requirements of Section 400 of this rule. The application shall contain all the information necessary to enable the Control Officer to make the determination to grant or to deny a permit or permit revision, which shall contain such terms and conditions as the Control Officer deems necessary to assure a source's compliance with the requirements of this rule.

302.6 The issuance of any permit or permit revision shall not relieve any person subject to the requirements of this rule from compliance with any Federal laws, Arizona laws, or these rules.

302.7 Any other law, regulation or permit shall not relieve any person from obtaining a permit or permit revision required under this rule.

303 VISIBLE EMISSIONS REQUIREMENTS FOR DUST-GENERATING OPERATIONS:

303.1 **Dust-Generating Operation Visible Emissions Requirement**: The owner and/or operator of a dust-generating operation shall not allow visible fugitive dust emissions to exceed the limits listed in either one of the following:

a. The owner and/or operator of a dust-generating operation shall not cause or allow visible fugitive dust emissions to exceed 20% opacity.

b. The owner and/or operator of a dust-generating operation shall not cause or allow visible emissions of particulate matter, including fugitive dust, beyond the property line within which the emissions are generated. Visible emissions shall be determined by a standard of no visible emissions exceeding 30 seconds in duration in any six-minute period as determined by using EPA Reference Method 22.

303.2 Exemptions from Dust-Generating Operation Visible Emissions Requirement:

a. If wind conditions cause fugitive dust emissions to exceed the visible emissions requirements in Section 303.1(a) of this rule, despite implementation of the Dust Control Plan, an owner and/or operator shall:

(1) Ensure that all control measures and requirements of the Dust Control Plan are implemented and the subject violations cannot be prevented by better application, operation, or maintenance of these measures and requirements.

(2) Cease dust-generating operations and stabilize any disturbed surface area consistent with Section 304.3 of this rule.

(3) Compile records consistent with Sections 502 and 503 of this rule and document control measure and other Dust Control Plan requirement implementation.

b. Emergency Maintenance of Flood Control Channels and Water Retention Basins: The visible emissions limits described in Section 303.1 of this rule shall not apply to emergency maintenance of flood control channels and water retention basins, provided that control measures are implemented.

c. Vehicle Test and Development Facilities and Operations: The visible emissions limit described in Section 303.1(a) of this rule shall not apply to vehicle test and development facilities and operations when dust is required to test and validate design integrity, product quality, and/or commercial acceptance, if such testing is not feasible within enclosed facilities. However, all areas used to test and validate design integrity, product quality, and/or commercial acceptance shall be stabilized after such testing, in compliance with Appendix C (Fugitive Dust Test Methods) of these rules. All areas not used to test and validate design integrity, product quality, and/or commercial acceptance shall be stabilized, in compliance with Appendix C (Fugitive Dust Test Methods) of these rules. In addition, vehicle test and development facilities may require a Dust Control permit in accordance with Section 302 of this rule.

d. Activities Near the Property Line: The opacity limit described in Section 303.1(b) of this rule shall not apply to dust-generating operations conducted within 25 feet of the property line.

e. Ceasing Operations at a Solid Waste Management Facility: The requirement in Section 303.2(a)(2) of this rule to cease dust-generating operations if wind conditions cause fugitive dust emissions to exceed the visible emissions requirements in Section 303.1(a) of this rule shall not apply to daily compaction and covering of refuse if ceasing operations violates Arizona Department of Environmental Quality solid waste management rules or causes or threatens to cause a public health hazard or nuisance. However, the owner and/or operator must comply with all other provisions in Section 303.2(a) of this rule.

304 STABILIZATION REQUIREMENTS FOR DUST-GENERATING OPERATIONS:

304.1 Unpaved Parking Lot: The owner and/or operator of any unpaved parking lot shall not allow visible fugitive dust emissions to exceed 20% opacity and shall not allow silt loading equal to or greater than 0.33 oz/ft^2. However, if silt loading is equal to or greater than 0.33 oz/ft^2, then the owner and/or operator shall not allow the silt content to exceed 8%.

304.2 Unpaved Haul/Access Road:

a. The owner and/or operator of any unpaved haul/access road (whether at a work site that is under construction or at a work site that is temporarily or permanently inactive) shall not allow visible fugitive dust emissions to exceed 20% opacity and shall not allow silt loading equal to or greater than 0.33 oz/ft^2. However, if silt loading is equal to or greater than 0.33 oz/ft^2, then the owner and/or operator shall not allow the silt content to exceed 6%.

b. The owner and/or operator of any unpaved haul/access road (whether at a work site that is under construction or a work site that is temporarily or permanently inactive) shall, as an alternative to meeting the stabilization requirements for an unpaved haul/access road in Section 304.2(a) of this rule, limit vehicle trips to no more than 20 per day per road and limit vehicle speeds to no more than 15 miles per hour. If complying with this section of this rule, the owner and/or operator must include, in a Dust Control Plan, the maximum number of vehicle trips on the unpaved haul/access roads each day (including number of employee vehicles, earthmoving equipment, haul trucks, and water trucks) and a description of how vehicle speeds will be restricted to no more than 15 miles per hour.

304.3 Disturbed Surface Area: The owner and/or operator of any disturbed surface area on which no activity is occurring (whether at a work site that is under construction or a work site that is temporarily or permanently inactive) shall meet

at least one of the standards described in Sections 304.3(a) through 304.3(g) below, as applicable. Should such a disturbed surface area contain more than one type of stabilization characteristic, such as soil, vegetation, or other characteristic, which is visibly distinguishable, then the owner and/or operator shall test each representative surface separately for stability, in an area that represents a random portion of the overall disturbed conditions of the site, in accordance with the appropriate test methods described in Section 501.2(c) of this rule and in Appendix C (Fugitive Dust Test Methods) of these rules. The owner and/or operator of such disturbed surface area on which no activity is occurring shall be considered in violation of this rule if the area is not maintained in a manner that meets at least one of the standards listed below, as applicable. An area is considered to be a disturbed surface area until the activity that caused the disturbance has been completed and the disturbed surface area meets the standards described in this section of this rule.

a. Maintain a soil crust;

b. Maintain a threshold friction velocity (TFV) for disturbed surface areas corrected for non-erodible elements of 100 cm/second or higher;

c. Maintain a flat vegetative cover (i.e., attached [rooted] vegetation or unattached vegetative debris lying on the surface with a predominant horizontal orientation that is not subject to movement by wind) that is equal to at least 50%;

d. Maintain a standing vegetative cover (i.e., vegetation that is attached [rooted] with a predominant vertical orientation) that is equal to or greater than 30%;

e. Maintain a standing vegetative cover (i.e., vegetation that is attached [rooted] with a predominant vertical orientation) that is equal to or greater than 10% and where the threshold friction velocity is equal to or greater than 43 cm/second when corrected for non-erodible elements;

f. Maintain a percent cover that is equal to or greater than 10% for non-erodible elements; or

g. Comply with a standard of an alternative test method, upon obtaining the written approval from the Control Officer and the Administrator.

304.4 Vehicle Test and Development Facilities and Operations: No stabilization requirement shall apply to vehicle test and development facilities and operations when dust is required to test and validate design integrity, product quality, and/or commercial acceptance, if such testing is not feasible within enclosed facilities. However, all areas used to test and validate design integrity, product quality, and/or commercial acceptance shall be stabilized after such testing, in compliance with Appendix C (Fugitive Dust Test Methods) of these rules. All areas not used

to test and validate design integrity, product quality, and/or commercial acceptance shall be stabilized, in compliance with Appendix C (Fugitive Dust Test Methods) of these rules. In addition, vehicle test and development facilities may require a Dust Control permit in accordance with Section 302 of this rule.

305 CONTROL MEASURES FOR DUST-GENERATING OPERATIONS: When engaged in a dust-generating operation, the owner and/or operator shall install, maintain, and use control measures, as applicable. Control measures for specific dust-generating operations are described in Sections 305.1 through 305.12 of this rule. The owner and/or operator of a dust-generating operation shall implement control measures before, after, and while conducting dust-generating operations, including during weekends, after work hours, and on holidays. At least one primary control measure and one contingency control measure must be identified in the Dust Control Plan for all dust-generating sources.

305.1 Off-Site Hauling onto Areas Accessible to the Public: The owner and/or operator of a dust-generating operation that involves off-site hauling shall implement the following control measures:

a. When cargo compartment is loaded:

(1) Load all haul trucks such that the freeboard is not less than three inches;

(2) Load all haul trucks such that at no time shall the highest point of the bulk material be higher than the sides, front, and back of a cargo container area;

(3) Prevent spillage or loss of bulk material from holes or other openings in the cargo compartment's floor, sides, and/or tailgate(s); and

(4) Cover the cargo compartment with a tarp or other suitable closure.

b. When cargo compartment is empty:

(1) Clean the interior of the cargo compartment; or

(2) Cover the cargo compartment with a tarp or other suitable closure.

c. When off-site hauling, install, maintain, and use a suitable trackout control device that controls and prevents trackout and/or removes particulate matter from tires and the exterior surfaces of haul trucks and/or motor vehicles that traverse the site.

305.2 Bulk Material Hauling/Transporting When On-Site Hauling/Transporting Within the Boundaries of the Work Site but not Crossing an Area Accessible to the Public: The owner and/or operator of a dust-generating operation that involves bulk material hauling/transporting when on-site hauling/transporting

within the boundaries of the work site but not crossing an area accessible to the public shall implement one of the following control measures:

a. Limit vehicle speed to 15 miles per hour or less while traveling on the work site;

b. Apply water to the top of the load; or

c. Cover haul trucks with a tarp or other suitable closure.

305.3 Bulk Material Hauling/Transporting When On-Site Hauling/Transporting Within the Boundaries of the Work Site and Crossing and/or Accessing an Area Accessible to the Public: The owner and/or operator of a dust-generating operation that involves bulk material hauling/transporting when on-site hauling/transporting within the boundaries of the work site and crossing and/or accessing an area accessible to the public shall implement all of the following control measures:

a. Load all haul trucks such that the freeboard is not less than three inches;

b. Load all haul trucks such that at no time shall the highest point of the bulk material be higher than the sides, front, and back of a cargo container area;

c. Prevent spillage or loss of bulk material from holes or other openings in the cargo compartment's floor, sides, and/or tailgate(s); and

d. When crossing and/or accessing an area accessible to the public, install, maintain, and use a suitable trackout control device that controls and prevents trackout and/or removes particulate matter from tires and the exterior surfaces of haul trucks and/or motor vehicles that traverse the site.

305.4 Bulk Material Stacking, Loading, and Unloading Operations: The owner and/or operator of a dust-generating operation that involves bulk material stacking, loading, and unloading operations shall implement the following control measures:

a. Prior to stacking, loading, and unloading:

(1) Mix material with water; or

(2) Mix material with a dust suppressant other than water.

b. While stacking, loading, and unloading:

(1) Apply water; or

(2) Apply a dust suppressant other than water.

305.5 Open Storage Piles: The owner and/or operator of a dust-generating operation that involves an open storage pile shall implement one of the following control measures, as applicable, when not conducting stacking, loading, and unloading operations:

a. Cover all open storage piles with a tarp, plastic, or other material to prevent wind from removing the covering(s) such that the covering(s) will not be dislodged by wind; or

b. Apply water to maintain a soil moisture content at a minimum of 12%, as determined by ASTM Method D2216-05 or other equivalent methods approved by the Control Officer and the Administrator. For areas that have an optimum moisture content for compaction of less than 12%, as determined by ASTM Method D1557-02e1 or other equivalent methods approved by the Control Officer and the Administrator, maintain at least 70% of the optimum soil moisture content; or

c. Maintain a visible crust; or

d. Implement the control measure described in Section 305.5(b) or in Section 305.5(c) of this rule and construct and maintain wind barriers, storage silos, or a three-sided enclosure with walls, whose length is no less than equal to the length of the pile, whose distance from the pile is no more than twice the height of the pile, whose height is equal to the pile height, and whose porosity is no more than 50%.

305.6 Unpaved Staging Areas, Unpaved Parking Areas, and Unpaved Material Storage Areas: The owner and/or operator of a dust-generating operation that involves unpaved staging areas, unpaved parking areas, and unpaved material storage areas shall implement one or more of the following control measures:

a. Apply water so that the surface is visibly moist;

b. Pave;

c. Apply and maintain gravel, recycled asphalt, or other suitable material;

d. Apply and maintain a suitable dust suppressant other than water; or

e. Limit vehicle trips to no more than 20 per day per road and limit vehicle speeds to no more than 15 miles per hour. If complying with this section, the owner and/or operator shall provide to the Control Officer the maximum number of vehicle trips on the staging areas, parking areas, and/or material storage areas each day (including number of employee vehicles, earthmoving

equipment, haul trucks, and water trucks) and a description of how vehicle speeds will be restricted to no more than 15 miles per hour.

305.7 Unpaved Haul/Access Roads: The owner and/or operator of a dust-generating operation that involves unpaved haul/access roads shall implement one or more of the following control measures:

a. Apply water so that the surface is visibly moist;

b. Pave;

c. Apply and maintain gravel, recycled asphalt, or other suitable material;

d. Apply and maintain a suitable dust suppressant other than water; or

e. Limit vehicle trips to no more than 20 per day per road and limit vehicle speeds to no more than 15 miles per hour. If complying with this section of this rule, the owner and/or operator shall provide to the Control Officer the maximum number of vehicle trips on the unpaved haul/access roads each day (including number of employee vehicles, earthmoving equipment, haul trucks, and water trucks) and a description of how vehicle speeds will be restricted to no more than 15 miles per hour.

305.8 Weed Abatement by Discing or Blading: The owner and/or operator of a dust-generating operation that involves weed abatement by discing or blading shall comply with all of the following control measures:

a. Before weed abatement by discing or blading occurs, apply water;

b. While weed abatement by discing or blading is occurring, apply water; and

c. After weed abatement by discing or blading occurs, pave, apply gravel, apply water, apply a suitable dust suppressant other than water, or establish vegetative ground cover.

305.9 Blasting Operations: The owner and/or operator of a dust-generating operation that involves blasting operations shall pre-water and maintain surface soils in a stabilized condition where support equipment and vehicles will operate.

305.10 Demolition Activities: The owner and/or operator of a dust-generating operation that involves demolition activities shall implement all of the following control measures:

a. Apply water to demolition debris immediately following demolition activity; and

b. Apply water to all disturbed soils surfaces to establish a visible crust and to prevent wind erosion.

305.11 Disturbed Surface Areas: The owner and/or operator of a dust-generating operation that involves disturbed surface areas shall implement the following control measures, as applicable:

a. Before disturbed surface areas are created, implement one of the following control measures:

(1) Pre-water site to depth of cuts, allowing time for penetration; or

(2) Phase work to reduce the amount of disturbed surface areas at any one time.

b. While disturbed surface areas are being created, implement one of the following control measures:

(1) Apply water or other suitable dust suppressant other than water to keep the soil visibly moist throughout the process;

(2) Apply water to maintain a soil moisture content at a minimum of 12%, as determined by ASTM Method D2216-05 or other equivalent method as approved by the Control Officer and the Administrator. For areas that have an optimum moisture content for compaction of less than 12%, as determined by ASTM Method D1557-02e1 or other equivalent method approved by the Control Officer and the Administrator, maintain at least 70% of the optimum soil moisture content; or

(3) Implement control measure described in Section 305.11(b)(1) or Section 305.11(b)(2) of this rule and construct fences or three-foot to five-foot high wind barriers with 50% or less porosity adjacent to roadways or urban areas to reduce the amount of wind-blown material leaving a site.

c. When the dust-generating operation is finished for a period of 30 days or longer: For longer than temporary pauses that occur during a dust-generating operation, the owner and/or operator shall implement one or more of the following control measures within ten days following the completion of such dust-generating operation:

(1) Pave, apply gravel, or apply a suitable dust suppressant other than water;

(2) Establish vegetative ground cover;

(3) Implement control measures described in Section 305.11(c)(1) or Section 305.11(c)(2) of this rule and restrict vehicle access to the area;

(4) Apply water and prevent access by fences, ditches, vegetation, berms, or other suitable barrier or means sufficient to prevent trespass as approved by the Control Officer; or

(5) Restore area such that the vegetative ground cover and soil characteristics are similar to adjacent or nearby undisturbed native conditions.

305.12 Easements, Rights-of-Way, and Access Roads for Utilities (Transmission of Electricity, Natural Gas, Oil, Water, and Gas) Associated With Sources That Have a Non-Title V Permit, a Title V Permit, and/or a General Permit Under These Rules: The owner and/or operator of a dust-generating operation that involves an easement, right-of-way, and access road for utilities (transmission of electricity, natural gas, oil, water, and gas) associated with sources that have a Title V permit, a Non-Title V permit, and/or a General permit under these rules shall implement at least one of the following control measures:

a. Inside Area A, limit vehicle speed to 15 miles per hour or less and vehicle trips to no more than 20 per day per road;

b. Outside Area A, limit vehicle trips to no more than 20 per day per road; or

c. Implement control measures described in Section 305.7 of this rule.

306 TRACKOUT, CARRY-OUT, SPILLAGE, AND/OR EROSION: The owner and/or operator of a dust-generating operation shall prevent and control trackout, carry-out, spillage, and/or erosion.

306.1 Trackout Control Device:

a. Criterion for Trackout Control Device: Install, maintain and use a suitable trackout control device that prevents and controls trackout and/or removes particulate matter from tires and the exterior surfaces of haul trucks and/or motor vehicles that traverse the site at all exits onto areas accessible to the public from both of the following:

(1) All work sites with a disturbed surface area of two acres or larger, and

(2) All work sites where 100 cubic yards of bulk materials are hauled on-site and/or off-site per day.

b. Control Measures: For those work sites identified in Section 306.1(a) of this rule, prevent trackout, carry-out, spillage, and/or erosion by implementing one of the following control measures:

(1) At all exits onto areas accessible to the public, install a wheel wash system;

(2) At all exits onto areas accessible to the public, install a gravel pad to comply with Section 217 of this rule;

(3) At all exits onto areas accessible to the public, install a grizzly or rumble grate that consists of raised dividers (rails, pipes, or grates) a minimum of three inches tall, six inches apart, and 20 feet long, to allow a vibration to be produced such that dust is shaken off the wheels of a vehicle as the entire circumference of each wheel of the vehicle passes over the grizzly or rumble grate; or

(4) Pave starting from the point of intersection with an area accessible to the public and extending for a centerline distance of at least 100 feet and a width of at least 20 feet.

306.2 Clean Up of Trackout:

a. Criterion for Clean Up of Trackout: Clean up, trackout, carry-out, spillage, and/or erosion from areas accessible to the public including curbs, gutters, and sidewalks, on the following time-schedule:

(1) Immediately, when trackout, carry-out, or spillage extends a cumulative distance of 25 linear feet or more; and

(2) At the end of the workday, for all other trackout, carry-out, spillage, and/or erosion.

b. Control Measures:

(1) Operate a street sweeper or wet broom with sufficient water, or including but not limited to kick broom, steel bristle broom, Teflon broom, vacuum, at the speed recommended by the manufacturer and at the frequency(ies) described in this section of this rule; or

(2) Manually sweep up deposits to comply with this section of this rule.

307 SOIL MOISTURE: If water is the chosen control measure in an approved Dust Control Plan, the owner and/or operator of a dust-generating operation shall operate a water application system on-site (e.g., water truck, water hose) while conducting any earth-moving operations on disturbed surface areas 1 acre or larger, unless a visible crust is maintained or the soil is sufficiently damp to prevent loose grains of soil from becoming dislodged.

308 PROJECT INFORMATION SIGN FOR DUST-GENERATING OPERATIONS: For all sites with a Dust Control permit that are five acres or larger, except for routine maintenance and repair done under a Dust Control Block permit, the owner and/or operator shall erect and maintain a project information sign at the main entrance such that members of the public can easily view and read the sign at all times. Such sign shall have a white background, have black block lettering that is at least four inches high, and shall contain at least all of the following information:

308.1 Project name and permittee's name;

308.2 Current Dust Control permit number;

308.3 Name and local phone number of person(s) responsible for dust control matters;

308.4 Text stating: "Dust complaints? Call Maricopa County Air Quality Department – (Insert the accurate Maricopa County Air Quality Department complaint line telephone number)."

309 DUST CONTROL TRAINING CLASSES FOR DUST-GENERATING OPERATIONS:

309.1 Basic Dust Control Training Class:

a. At least once every three years, the persons specified in Section 309.1(b) or Section 309.1(c) of this rule shall successfully complete a Basic Dust Control Training Class conducted or approved by the Control Officer.

b. The following persons present at a site that is subject to a permit issued by the Control Officer requiring control of PM_{10} emissions from dust-generating operations shall complete a Basic Dust Control Training Class as specified in Section 309.1(a) of this rule:

(1) Water truck drivers.

(2) Water-pull drivers.

(3) The site superintendent or other designated on-site representative of the permit holder, if present at a site that has more than one acre of disturbed surface area.

c. A Dust Control Block Permit permittee/holder shall have, at a minimum, one individual trained in accordance with the Basic Dust Control Training Class as specified in Section 309.1(a) of this rule, if present at a site that has more than one acre of disturbed surface area.

d. All persons having successfully completed training during the 2006 and 2007 calendar years shall be deemed to have satisfied the requirement to successfully complete the Basic Dust Control Training Class, if the training that was completed was conducted or approved by the Control Officer. Completion of the Comprehensive Dust Control Training Class, as required in Section 309.2 of this rule, shall satisfy the requirement of this section of this rule.

e. The Control Officer may suspend or revoke for cause including, but not limited to, inappropriate ethical activities or conduct associated with the dust control program or repeated failure to follow the training requirements, a certification issued to a person having successfully completed a Basic Dust Control Training Class conducted or approved by the Control Officer. The Control Officer will provide written notification to such person regarding such suspension or revocation.

309.2 Comprehensive Dust Control Training Class:

a. At least once every three years, the Dust Control Coordinator, who meets the requirements of Section 310 of this rule, shall successfully complete the Comprehensive Dust Control Training Class conducted or approved by the Control Officer.

b. All persons having successfully completed training during the 2006 and 2007 calendar years shall be deemed to have satisfied the requirement to successfully complete the Comprehensive Dust Control Training Class, if the training that was completed was conducted or approved by the Control Officer.

c. The Control Officer may suspend or revoke for cause including, but not limited to, inappropriate ethical activities or conduct associated with the dust control program or repeated failure to follow the training requirements, a certification issued to a person having successfully completed a Comprehensive Dust Control Training Class conducted or approved by the Control Officer. The Control Officer will provide written notification to such person regarding such suspension or revocation.

310 DUST CONTROL COORDINATOR FOR DUST-GENERATING OPERATIONS:

310.1 The permittee for any site of five acres or more of disturbed surface area subject to a permit issued by the Control Officer requiring control of PM_{10} emissions from dust-generating operations shall have on-site at least one Dust Control Coordinator trained in accordance with Section 309.2 of this rule at all times during primary dust-generating operations related to the purposes for which the Dust Control permit was obtained.

310.2 The Dust Control Coordinator shall have full authority to ensure that dust control measures are implemented on-site, including conducting inspections, deployment

of dust suppression resources, and modifications or shut-down of activities as needed to control dust.

310.3 The Dust Control Coordinator shall be responsible for managing dust prevention and dust control on the site.

310.4 At least once every three years, the Dust Control Coordinator shall successfully complete a Comprehensive Dust Control Training Class conducted or approved by the Control Officer.

310.5 The Dust Control Coordinator shall have a valid dust training certification identification card readily accessible on-site while acting as a Dust Control Coordinator.

310.6 The requirement for a Dust Control Coordinator shall lapse when all of the following actions/events/procedures occur:

a. The area of disturbed surface area becomes less than five acres;

b. The previously disturbed surface areas have been stabilized in accordance with/in compliance with the standards and/or requirements of this rule; and

c. The Dust Control permit holder provides notice to the Control Officer of acreage stabilization.

310.7 The Dust Control Block Permit permittee/holder shall have on sites that have more than one acre of disturbed surface area at least one individual, who has been trained in accordance with the requirements of Section 309.1(c) of this rule. One such individual shall be designated by the Dust Control Block Permit permittee/ holder as the Dust Control Coordinator. The Dust Control Coordinator shall be present on-site at all times during primary dust-generating activities that are related to the purposes for which the permit was obtained.

SECTION 400 – ADMINISTRATIVE REQUIREMENTS

401 DUST CONTROL PERMIT REQUIREMENTS:

401.1 To apply for a Dust Control permit, an applicant shall complete a permit application in the manner and form prescribed by the Control Officer. At a minimum, such application shall contain the following information:

a. Applicant information;

b. Project information, which shall include a project site drawing and, if the site is one acre or larger, soil designations; and

c. Dust Control Plan, which shall meet the specifications described in Section 402 of this rule.

401.2 A Dust Control permit shall be granted subject to, but not limited to, the following conditions:

a. The permittee shall be responsible for ensuring that all persons abide by the conditions of the Dust Control permit and these regulations;

b. The permittee shall be responsible for supplying complete copies of the Dust Control permit including the Dust Control Plan, to all project contractors and subcontractors;

c. The permittee shall be responsible for all permit conditions, until a Permit Cancellation Request form has been submitted by the owner and/or operator and approved by the Control Officer;

d. The permittee shall be responsible for providing Dust Control Coordinator's/ Coordinators' name(s) and dust control training certification information/ number(s) to the Control Officer and for keeping such information updated.

401.3 The signature of the permittee on the Dust Control permit application shall constitute agreement to accept responsibility for meeting the conditions of the Dust Control permit and for ensuring that control measures are implemented throughout the project site and during the duration of the project.

402 DUST CONTROL PLAN REQUIREMENTS:

402.1 The owner and/or operator of a dust-generating operation shall submit to the Control Officer a Dust Control Plan with any permit applications that involve dust-generating operations with a disturbed surface area that equals or exceeds 0.10 acre (4,356 square feet) including both of the following situations:

a. When submitting an application for a Dust Control permit involving dust-generating operations that would equal or exceed 0.10 acre (4,356 square feet), and

b. Before commencing any routine dust-generating operation at a site that has obtained or must obtain a Title V, Non-Title V, or General permit under Regulation II (Permits and Fees) of these rules.

402.2 The owner and/or operator of a dust-generating operation shall submit to the Control Officer a Dust Control Plan with any application for a Dust Control permit. Applicants shall describe, in a Dust Control Plan, all control measures to be implemented before, after, and while conducting any dust-generating operation, including during weekends, after work hours, and on holidays.

402.3 A Dust Control Plan shall, at a minimum, contain all of the following information:

a. Name(s), address(es), and phone numbers of person(s) responsible for the submittal and implementation of the Dust Control Plan and responsible for the dust-generating operation.

b. A drawing, on 8½" x 11" paper, that shows:

(1) Entire project site/facility boundaries, including boundaries of areas to be disturbed if less than entire project site/facility boundaries,

(2) Acres to be disturbed with linear dimensions or certification by a licensed engineer or surveyor showing the total square footage to be disturbed,

(3) Nearest public roads,

(4) North arrow,

(5) Planned exit locations onto areas accessible to the public, and

(6) Unpaved parking lot(s).

c. Appropriate control measures, or a combination thereof, as described in Sections 305 and 306 of this rule, for every actual and potential dust-generating operation.

(1) Control measures must be implemented before, after, and while conducting any dust-generating operation, including during weekends, after work hours, and on holidays.

(2) All required control measures and at least one contingency control measure must be identified for all dust-generating operations.

(3) A control measure that is not listed in Section 305 or in Section 306 of this rule may be chosen provided that such control measure is implemented to comply with the requirements of this rule.

(4) If complying with Section 305.7(e) of this rule, the Dust Control Plan must include the maximum number of vehicle trips on the unpaved haul/access roads each day (including number of employee vehicles, earthmoving equipment, haul trucks, and water trucks).

d. Dust suppressants to be applied, including all of the following product specifications or label instructions for approved usage:

(1) Method, frequency, and intensity of application;

(2) Type, number, and capacity of application equipment; and

(3) Information on environmental impacts and approvals or certifications related to appropriate and safe use for ground application.

e. Specific surface treatment(s) and/or control measures utilized to control material trackout and sedimentation where unpaved roads and/or access points join areas accessible to the public.

402.4 The Control Officer shall approve, disapprove, or conditionally approve the Dust Control Plan, in accordance with the criteria used to approve, disapprove or conditionally approve a permit, as described in Rule 200: Permit Requirements of these rules.

402.5 For construction projects one acre or larger, except for routine maintenance and repair done under a Dust Control Block Permit, a statement disclosing which of the four designated texture(s) of soil described in Appendix F of these rules is naturally present at or will be imported to the dust-generating operation. The measured soil content at a particular site shall take precedence over any mapped soil types, and whenever soils have been tested at a particular site, the test results should be relied on rather than the map in Appendix F of these rules.

402.6 Should any primary control measure(s) prove ineffective, the owner and/or operator shall immediately implement the contingency control measure(s). If the identified contingency control measure is effective to comply with all of the requirements of this rule, the owner and/or operator need not revise the Dust Control Plan.

403 DUST CONTROL PLAN REVISIONS:

403.1 If Required by the Control Officer:

a. If the Control Officer determines that an approved Dust Control Plan has been followed, yet fugitive dust emissions from any dust-generating operation still exceed the standards of this rule, then the Control Officer shall issue a written notice to the owner and/or operator of the dust-generating operation explaining such determination.

b. The owner and/or operator of a dust-generating operation shall make written revisions to the Dust Control Plan and shall submit such revised Dust Control Plan to the Control Officer within three working days of receipt of the Control Officer's written notice, unless such time period is extended by the Control Officer, upon request, for good cause. During the time that such owner and/or

operator is preparing revisions to the approved Dust Control Plan, such owner and/or operator must still comply with all requirements of this rule.

403.2 If Requested by the Permittee:

a. If the acreage of a project changes, the owner and/or operator shall request a Dust Control Plan revision. Such Dust Control Plan revision shall be filed in the manner and form prescribed by the Control Officer.

b. If the permit holder changes, the owner and/or operator shall request a Dust Control Plan revision. Such Dust Control Plan revision shall be filed in the manner and form prescribed by the Control Officer.

c. If the name(s), address(es), or phone numbers of person(s) responsible for the submittal and implementation of the Dust Control Plan and responsible for the dust-generating operation change, the owner and/or operator shall request a Dust Control Plan revision. Such Dust Control Plan revision shall be filed in the manner and form prescribed by the Control Officer.

d. If the activities related to the purposes for which the Dust Control permit was obtained change, the owner and/or operator shall request a Dust Control Plan revision. Such Dust Control Plan revision shall be filed in the manner and form prescribed by the Control Officer.

403.3 If Rule 310 is Revised:

a. If any changes to a Dust Control Plan are necessary as a result of the most recent revisions of this rule, such changes to the Dust Control Plan shall not be required until the associated Dust Control permit is required to be renewed.

b. If any changes to a Dust Control Plan associated with a Title V permit or with a Non-Title V permit are necessary as a result of the most recent revisions of this rule, then the owner and/or operator shall submit a revised Dust Control Plan to the Control Officer, according to the minor permit revision procedures described in Rule 210 or in Rule 220 of these rules respectively, no later than six months after the effective date of the most recent revisions to this rule.

404 DUST CONTROL BLOCK PERMIT REQUIREMENTS:

404.1 A Dust Control Block Permit application may be submitted to the Control Officer, if one or more of the activities listed in this section of this rule are conducted and if such activities occur at more than one site (i.e., projects that involve multiple small areas scattered throughout Maricopa County including, but not limited to, fiber optic cable installation and natural gas line extension). New construction shall obtain a separate Dust Control permit.

a. Routine operation (i.e., municipalities, governmental agencies, and utilities that are responsible for the repeat maintenance of infrastructure including, but not limited to, weed control around a prison, canal bank and road grading, and road shoulder grading).

b. Maintenance (i.e., municipalities, governmental agencies, and utilities that are responsible for the repeat maintenance of infrastructure including, but not limited to, weed control around a prison, canal bank and road grading, and road shoulder grading).

c. Expansion or extension of utilities, paved roads, unpaved roads, road shoulders, alleys, and public rights-of-way at non-contiguous sites by municipalities, governmental agencies, and utilities.

404.2 When completing and submitting a Dust Control Block Permit application, the owner and/or operator shall comply with the following requirements:

a. A Dust Control Plan that meets the criteria described in Section 402 of this rule and applies to all sites shall be submitted to the Control Officer with the Dust Control Block Permit application.

b. A description or map of the owner's and/or operator's service areas and a list of all sites that are 0.10 acre (4,356 square feet) or greater, including the location and size of each site, shall be submitted to the Control Officer with the Dust Control Block Permit application.

c. For any project that is 0.10 acre (4,356 square feet) or greater and not listed in the Dust Control Block Permit application, the applicant shall notify the Control Officer in writing at least three working days prior to commencing the dust-generating operation. The notice shall include the site location, size, type of activity, and start date.

404.3 The Dust Control Block Permit will cover crews that work for the municipalities, governmental agencies, and utilities, including subcontractors. However, municipalities, governmental agencies, and utilities shall retain overall authority for dust control on the project.

405 **APPROVAL OR DENIAL OF PERMIT APPLICATIONS FOR DUST-GENERATING OPERATIONS:** The Control Officer shall take final action on a Dust Control permit application, a Dust Control permit revision, or a Dust Control Block Permit within 14 calendar days of the filing of the complete application. The Control Officer shall notify the applicant in writing of his approval or denial.

406 **TERMS FOR PERMITS FOR DUST-GENERATING OPERATIONS**: A Dust Control permit issued according to this rule shall be issued for a period of one year from the date of issuance. Should the project last longer than one year from the date the permit

was issued, the permittee shall re-apply for a Dust Control Permit at least 14 calendar days prior to the expiration date of the original permit. For the purpose of this section, a permit is considered expired, if a permit renewal is not applied for at least 14 calendar days prior to the expiration date of the original permit.

407 DEFACING, ALTERING, FORGING, COUNTERFEITING, OR FALSIFYING PERMITS FOR DUST-GENERATING OPERATIONS: A person shall not willfully deface, alter, forge, counterfeit, or falsify any Dust Control permit issued under the provisions of this rule.

408 FEES FOR PERMITS FOR DUST-GENERATING OPERATIONS: No Dust Control permit is valid until the applicable Dust Control permit fee has been received and until the Dust Control permit is issued by the Control Officer.

409 POSTING OF PERMITS FOR DUST-GENERATING OPERATIONS: A Dust Control permit and a Dust Control Plan, as approved by the Control Officer, shall be posted in a conspicuous location at the work site, within on-site equipment, or in an on-site vehicle, or shall otherwise be kept available on-site at all times.

410 COMPLIANCE SCHEDULE: The newly amended provisions of this rule become effective upon adoption of this rule. An owner and/or operator of a dust-generating operation subject to this rule shall meet all applicable provisions of this rule upon adoption of the newly amended provisions of this rule and according to the following schedule:

410.1 Basic Dust Control Training Class: No later than December 31, 2008, a site superintendent or other designated on-site representative of the permit holder and water truck and water pull drivers for each site shall have successfully completed the Basic Dust Control Training Class, as described in Section 309.1 of this rule.

410.2 Dust Control Coordinator: No later than June 30, 2008, any site and/or any contiguous site under common control of five acres or more of disturbed surface area subject to a permit shall, at all times during primary dust-generating operations related to the purposes for which the Dust Control permit was obtained, have on-site at least one individual designated by the permit holder as a Dust Control Coordinator, as described in Section 310 of this rule.

SECTION 500 – MONITORING AND RECORDS

501 COMPLIANCE DETERMINATION: To determine compliance with the visible emissions requirements in Section 303 of this rule and with the stabilization requirements in Section 304 of this rule, the following test methods shall be followed:

501.1 Opacity Observations:

a. **Dust-Generating Operations:** Opacity observations of dust-generating operations shall be conducted in accordance with Appendix C, Section 3 (Visual Opacity Determination of Emissions from Dust-Generating Operations) of these rules.

b. **Unpaved Parking Lot:** Opacity observations of any unpaved parking lot shall be conducted in accordance with Appendix C, Section 2.1 (Test Methods for Stabilization for Unpaved Roads and Unpaved Parking Lots) of these rules.

c. **Unpaved Haul/Access Road:** Opacity observations of any unpaved haul/access road (whether at a work site that is under construction or at a work site that is temporarily or permanently inactive) shall be conducted in accordance with Appendix C, Section 2.1 (Test Methods for Stabilization for Unpaved Roads and Unpaved Parking Lots) of these rules.

d. **Visible Emissions Beyond the Property Line:** Opacity observations of any visible emissions beyond the property line shall be conducted in accordance with EPA Reference Method 22.

501.2 Stabilization Observations:

a. **Unpaved Parking Lot:** Stabilization observations for unpaved parking lots shall be conducted in accordance with Appendix C, Section 2.1 (Test Methods for Stabilization for Unpaved Roads and Unpaved Parking Lots) of these rules. When more than one test method is permitted for a determination, an exceedance of the limits established in this rule determined by any of the applicable test methods shall constitute a violation of this rule.

b. **Unpaved Haul/Access Road:** Stabilization observations for unpaved haul/ access roads (whether at a work site that is under construction or at a work site that is temporarily or permanently inactive) shall be conducted in accordance with Appendix C, Section 2.1 (Test Methods for Stabilization for Unpaved Roads and Unpaved Parking Lots) of these rules. When more than one test method is permitted for a determination, an exceedance of the limits established in this rule determined by any of the applicable test methods shall constitute a violation of this rule.

c. **Disturbed Surface Area:** Stabilization observations for any disturbed surface area on which no activity is occurring (whether at a work site that is under construction, at a work site that is temporarily or permanently inactive) shall be conducted in accordance with at least one of the techniques described in Section 501.2(c)(1) through Section 501.2(c)(7) below, as applicable. The owner and/or operator of such inactive disturbed surface area shall be considered in violation of this rule if such inactive disturbed surface area is not maintained in a manner that meets at least one of the standards described in Section 304.3 of this rule, as applicable.

(1) Appendix C, Section 2.3 (Test Methods for Stabilization: Soil Crust Determination: the Drop Ball Test) of these rules for a soil crust; or

(2) Appendix C, Section 2.4 (Test Methods for Stabilization: Determination of Threshold Friction Velocity [TFV]: Sieving Field Procedure) of these rules for threshold friction velocity (TFV) corrected for non-erodible elements of 100 cm/second or higher; or

(3) Appendix C, Section 2.5 (Test Methods for Stabilization: Determination of Flat Vegetative Cover) of these rules for flat vegetation cover (i.e., attached [rooted] vegetation or unattached vegetative debris lying on the surface with a predominant horizontal orientation that is not subject to movement by wind) that is equal to at least 50%; or

(4) Appendix C, Section 2.6 (Test Methods for Stabilization: Determination of Standing Vegetative Cover) of these rules for standing vegetation cover (i.e., vegetation that is attached [rooted] with a predominant vertical orientation) that is equal to or greater than 30%; or

(5) Appendix C, Section 2.6 (Test Methods for Stabilization: Determination of Standing Vegetative Cover) of these rules for standing vegetation cover (i.e., vegetation that is attached [rooted] with a predominant vertical orientation) that is equal to or greater than 10% and where the threshold friction velocity is equal to or greater than 43 cm/second when corrected for non-erodible elements; or

(6) Appendix C, Section 2.7 (Test Methods for Stabilization: Rock Test Method) of these rules for a percent cover that is equal to or greater than 10%, for non-erodible elements; or

(7) An alternative and equivalent test method approved in writing by the Control Officer and the Administrator.

502 RECORDKEEPING:

502.1 Any person who conducts dust-generating operations that require a Dust Control Plan shall keep a written record of self-inspection on each day dust-generating operations are conducted. Self-inspection records shall include daily inspections for crusted or damp soil, trackout conditions and clean-up measures, daily water usage for dust control measures, and dust suppressant application. Such written record shall also include the following information:

a. Method, frequency, and intensity of application or implementation of the control measures;

b. Method, frequency, and amount of water application to the site;

c. Street sweeping frequency;

d. Types of surface treatments applied to and maintenance of trackout control devices, gravel pads, fences, wind barriers, and tarps;

e. Types and results of test methods conducted;

f. If contingency control measures are implemented, actual application or implementation of contingency control measures and why contingency control measures were implemented;

g. List of subcontractors' names and registration numbers updated when changes are made; and

h. Names of employee(s) who successfully completed dust control training class(es) required by Section 309 of this rule, date of the class(es) that such employee(s) successfully completed, and name of the agency/representative who conducted such class(es).

502.2 Any person who conducts dust-generating operations that do not require a Dust Control Plan shall compile and retain records (including records on any street sweeping, water applications, and maintenance of trackout control devices, gravel pads, fences, wind barriers, and tarps) that provide evidence of control measure application, by indicating the type of treatment or control measure, extent of coverage, and date applied.

502.3 Upon verbal or written request by the Control Officer, the log or the records and supporting documentation shall be provided as soon as possible but no later than 48 hours, excluding weekends. If the Control Officer is at the site where requested records are kept, records shall be provided without delay.

503 **RECORDS RETENTION**: Any person who conducts dust-generating operations that require a Dust Control Plan shall retain copies of approved Dust Control Plans, control measures implementation records, and all supporting documentation for at least six months following the termination of the dust-generating operation and for at least two years from the date such records were initiated. If a person has obtained a Title V Permit and is subject to the requirements of this rule, then such person shall retain records required by this rule for at least five years from the date such records are established.

504 **TEST METHODS INCORPORATED BY REFERENCE:** The test methods listed in this section are incorporated by reference. These incorporations by reference include no future editions or amendments. Copies of the test methods listed in this section are available for review at the Maricopa County Air Quality Department, 1001 North Central Avenue, Phoenix, AZ, 85004.

504.1 ASTM Method C136-06 (“Standard Test Method for Sieve Analysis of Fine and Coarse Aggregates”), 2006 edition.

504.2 ASTM Method D2216-05 (“Standard Test Method for Laboratory Determination of Water [Moisture] Content of Soil and Rock by Mass”), 2005 edition.

504.3 ASTM Method D1557-02e1 (“Test Method for Laboratory Compaction Characteristics of Soil Using Modified Effort (56,000 ft-lbf/ft^3 (2,700 kN-m/m^3)”), 2002 edition.

504.4 EPA Reference Method 22 (“Visual Determination of Fugitive Emissions from Material Sources and Smoke Emissions from Flares”), 2000 edition.

REGULATION III – CONTROL OF AIR CONTAMINANTS

RULE 310.01
FUGITIVE DUST FROM NON-TRADITIONAL SOURCES OF FUGITIVE DUST

INDEX

SECTION 100 – GENERAL

101 PURPOSE
102 APPLICABILITY
103 EXEMPTIONS

SECTION 200 – DEFINITIONS

201 ANIMAL WASTE
202 AREA A
203 AREA ACCESSIBLE TO THE PUBLIC
204 BULK MATERIAL
205 CHEMICAL/ORGANIC STABILIZER
206 CONTROL MEASURE
207 DISTURBED SURFACE AREA
208 DUST-GENERATING OPERATION
209 DUST SUPPRESSANT
210 EMERGENCY
211 EMERGENCY ACTIVITY
212 FEED LANE ACCESS AREAS
213 FUGITIVE DUST
214 GRAVEL PAD
215 GRIZZLY
216 LIVESTOCK ACTIVITIES
217 MOTOR VEHICLE
218 NON-TRADITIONAL SOURCE OF FUGITIVE DUST
219 NORMAL FARM CULTURAL PRACTICE
220 OFF-ROAD VEHICLE
221 OPEN AREAS AND VACANT LOTS
222 OWNER AND/OR OPERATOR

223 PAVE

224 PM_{10} NONATTAINMENT AREA

225 PROPERTY LINE

226 PUBLIC ROADWAYS

227 TRACKOUT/CARRYOUT

228 TRACKOUT CONTROL DEVICE

229 UNPAVED ACCESS CONNECTIONS

230 UNPAVED PARKING LOT

231 UNPAVED ROADWAY (INCLUDING ALLEYS)

232 VACANT LOT

SECTION 300 – STANDARDS

301 GENERAL REQUIREMENTS FOR NON-TRADITIONAL SOURCES OF FUGITIVE DUST

302 CONTROL MEASURES FOR NON-TRADITIONAL SOURCES OF FUGITIVE DUST

SECTION 400 – ADMINISTRATIVE REQUIREMENTS (NOT APPLICABLE)

SECTION 500 – MONITORING AND RECORDS

501 COMPLIANCE DETERMINATION

502 RECORDKEEPING

503 RECORDS RETENTION

Adopted 06/16/99
Revised 02/16/00
Revised 02/17/05
Revised 03/26/08
Revised 01/27/10

MARICOPA COUNTY
AIR POLLUTION CONTROL REGULATIONS
REGULATION III – CONTROL OF AIR CONTAMINANTS

RULE 310.01
FUGITIVE DUST FROM NON-TRADITIONAL SOURCES OF FUGITIVE DUST

SECTION 100 – GENERAL

101 PURPOSE: To minimize the amount of fugitive dust entrained into the ambient air from non-traditional sources of fugitive dust by requiring measures to prevent, reduce, or mitigate fugitive dust emissions.

102 APPLICABILITY:

102.1 The provisions of this rule shall apply to non-traditional sources of fugitive dust that are conducted in Maricopa County, except for those dust-generating operations listed in Section 103 of this rule.

102.2 The provisions of this rule shall apply to any open area or vacant lot that is not defined as agricultural land and is not used for agricultural purposes according to Arizona Revised Statutes (A.R.S.) § 42-12151 and A.R.S. § 42-12152.

103 EXEMPTIONS:

103.1 The provisions of this rule shall not apply to normal farm cultural practices according to A.R.S. § 49-457 and A.R.S. § 49-504.4.

103.2 The provisions of this rule shall not apply to dust-generating operations that are subject to the standards and/or requirements described in Rule 310: Fugitive Dust from Dust-Generating Operations of these rules.

103.3 The provisions of this rule shall not apply to emergency activities that may disturb the soil conducted by any utility or government agency in order to prevent public injury or to restore critical utilities to functional status.

103.4 The provisions of this rule do not apply to the establishment of initial landscapes without the use of mechanized equipment, conducting landscape maintenance without the use of mechanized equipment, and playing on or maintaining a field used for non-motorized sports. However, establishing initial landscapes without

the use of mechanized equipment and conducting landscape maintenance without the use of mechanized equipment shall not include grading, or trenching, performed to establish initial landscapes or to redesign existing landscapes.

SECTION 200 – DEFINITIONS: For the purpose of this rule, the following definitions apply, in addition to those definitions found in Rule 100: General Provisions and Definitions of these rules. In the event of any inconsistency between any of the Maricopa County air pollution control rules, the definitions in this rule take precedence.

201 **ANIMAL WASTE –** Any animal excretions and mixtures containing animal excretions.

202 **AREA A –** As defined in A.R.S. § 49-541(1), the area in Maricopa County delineated as follows:

Township 8 North, Range 2 East and Range 3 East
Township 7 North, Range 2 West through Range 5 East
Township 6 North, Range 5 West through Range 6 East
Township 5 North, Range 5 West through Range 7 East
Township 4 North, Range 5 West through Range 8 East
Township 3 North, Range 5 West through Range 8 East
Township 2 North, Range 5 West through Range 8 East
Township 1 North, Range 5 West through Range 7 East
Township 1 South, Range 5 West through Range 7 East
Township 2 South, Range 5 West through Range 7 East
Township 3 South, Range 5 West through Range 1 East
Township 4 South, Range 5 West through Range 1 East

203 **AREA ACCESSIBLE TO THE PUBLIC –** Any paved parking lot or paved roadway that can be entered or used for public travel primarily for purposes unrelated to the dust-generating operation.

204 **BULK MATERIAL –** Any material, including, but not limited to, the following materials that are capable of producing fugitive dust:

204.1 Earth.
204.2 Rock.
204.3 Silt.
204.4 Sediment.
204.5 Sand.
204.6 Gravel.
204.7 Soil.
204.8 Fill.
204.9 Aggregate less than 2 inches in length or diameter (i.e., aggregate base course [ABC]).
204.10 Dirt.
204.11 Mud.

204.12 Demolition debris.
204.13 Cotton.
204.14 Trash.
204.15 Cinders.
204.16 Pumice.
204.17 Saw dust.
204.18 Feeds.
204.19 Grains.
204.20 Fertilizers.
204.21 Fluff from shredders.
204.22 Dry concrete.

205 **CHEMICAL/ORGANIC STABILIZER –** Any non-toxic chemical or organic dust suppressant, other than water, which meets any specifications, criteria, or tests required by any federal, state, or local water agency and is not prohibited for use by any applicable law, rule, or regulation.

206 **CONTROL MEASURE –** A technique, practice, or procedure used to prevent or minimize the generation, emission, entrainment, suspension, and/or airborne transport of fugitive dust.

207 **DISTURBED SURFACE AREA –** A portion of the earth's surface or material placed on the earth's surface that has been physically moved, uncovered, destabilized, or otherwise modified from its undisturbed native condition if the potential for the emission of fugitive dust is increased by the movement, destabilization, or modification.

208 **DUST-GENERATING OPERATION –** Any activity capable of generating fugitive dust, including but not limited to, the following activities:

208.1 Land clearing, maintenance, and land cleanup using mechanized equipment.
208.2 Earthmoving.
208.3 Weed abatement by discing or blading.
208.4 Excavating.
208.5 Construction.
208.6 Demolition.
208.7 Bulk material handling (e.g., bulk material hauling and/or transporting, bulk material stacking, loading, and unloading operations).
208.8 Storage and/or transporting operations (e.g., open storage piles).
208.9 Operation of any outdoor equipment.
208.10 Operation of motorized machinery.
208.11 Establishing and/or using staging areas, parking areas, material storage areas, or access routes to and from a site.
208.12 Establishing and/or using unpaved haul/access roads to, from, and within a site.
208.13 Disturbed surface areas associated with a site.
208.14 Installing initial landscapes using mechanized equipment.

209 **DUST SUPPRESSANT –** Water, hygroscopic material, solution of water and chemical surfactant, foam, non-toxic chemical stabilizer, or any other dust palliative, which is not prohibited for ground surface application by the Environmental Protection Agency (EPA) or the Arizona Department of Environmental Quality (ADEQ), or any applicable law, rule, or regulation, as a treatment material for reducing fugitive dust emissions.

210 **EMERGENCY –** A situation arising from sudden and reasonably unforeseeable events beyond the control of the source, including acts of God, which situation requires immediate corrective action to restore normal operation, and that causes the source to exceed a limitation in this rule, due to unavoidable increases in emissions attributable to the emergency. An emergency shall not include any noncompliance due to improperly designed equipment, lack of preventative maintenance, careless or improper operation, or operator error.

211 **EMERGENCY ACTIVITY –** Repairs that are a result of an emergency which prevents or hinders the provision of electricity, the distribution/collection of water, and the availability of other utilities due to unforeseen circumstances that are beyond the routine maintenance and repair due to normal wear conducted by a utility or municipality.

212 **FEED LANE ACCESS AREAS –** Roads providing access from the feed preparation areas to and including feed lane areas at a livestock activity. These access roads are typically used to distribute feed from feed trucks to the animals.

213 **FUGITIVE DUST –** The particulate matter not collected by a capture system, that is entrained in the ambient air and is caused from human and/or natural activities, such as, but not limited to, movement of soil, vehicles, equipment, blasting, and wind. For the purpose of this rule, fugitive dust does not include particulate matter emitted directly from the exhaust of motor vehicles and other internal combustion engines, from portable brazing, soldering, or welding equipment, and from piledrivers, and does not include emissions from process and combustion sources that are subject to other rules in Regulation III (Control of Air Contaminants) of these rules.

214 **GRAVEL PAD –** A layer of washed gravel, rock, or crushed rock that is at least one inch or larger in diameter, that is maintained at the point of intersection of an area accessible to the public and a site exit to dislodge mud, dirt, and/or debris from the tires of motor vehicles, prior to leaving the site. Minimum dimensions must be 30 feet wide by 3 inches deep and 50 feet long or the length of the longest motor vehicle, whichever is greater. If an unpaved surface exit does not have adequate width to install a 30-foot wide gravel pad, then the width of the gravel pad must cover the full width of the unpaved surface exit and such shorter width shall be adequate to prevent trackout.

215 **GRIZZLY –** A device (i.e., rails, pipes, or grates) used to dislodge mud, dirt, and/or debris from the tires and undercarriage of motor vehicles prior to leaving the work site.

216 **LIVESTOCK ACTIVITIES –** Any activity directly related to feeding animals, displaying animals, racing animals, exercising animals, and/or for any other such activity

including, but not limited to, livestock arenas, horse arenas, feed lots, and residential activities related to feeding or raising animals.

217 **MOTOR VEHICLE –** A self-propelled vehicle for use on the public roads and highways of the State of Arizona and required to be registered under the Arizona State Uniform Motor Vehicle Act, including any non-motorized attachments, such as but not limited to, trailers or other conveyances which are connected to or propelled by the actual motorized portion of the vehicle.

218 **NON-TRADITIONAL SOURCE OF FUGITIVE DUST –** A source of fugitive dust that is located at a source that does not require any permit under these rules. The following non-traditional sources of fugitive dust are subject to the standards and/or requirements described in Rule 310.01: Fugitive Dust from Non-Traditional Sources of Fugitive Dust of these rules:

218.1 Vehicle use in open areas and vacant lots.
218.2 Open areas and vacant lots.
218.3 Unpaved parking lots.
218.4 Unpaved roadways (including alleys).
218.5 Livestock activities.
218.6 Erosion-caused deposition of bulk materials onto paved surfaces.
218.7 Easements, rights-of-way, and access roads for utilities (electricity, natural gas, oil, water, and gas transmission).

219 **NORMAL FARM CULTURAL PRACTICE –** All activities by the owner, lessee, agent, independent contractor, and/or supplier conducted on any facility for the production of crops and/or nursery plants. Disturbances of the field surface caused by turning under stalks, tilling, leveling, planting, fertilizing, or harvesting are included in this definition.

220 **OFF-ROAD VEHICLE –** Any self-propelled conveyance specifically designed for off-road use, including, but not limited to, off-road or all-terrain equipment, trucks, cars, motorcycles, motorbikes, or motorbuggies.

221 **OPEN AREAS AND VACANT LOTS –** Any of the following described in Sections 221.1 through 221.3 of this rule. For the purpose of this rule, vacant portions of residential or commercial lots that are immediately adjacent and owned and/or operated by the same individual or entity are considered one vacant open area or vacant lot.

221.1 An unsubdivided or undeveloped tract of land adjoining a developed or a partially developed residential, industrial, institutional, governmental, or commercial area.

221.2 A subdivided residential, industrial, institutional, governmental, or commercial lot that contains no approved or permitted buildings or structures of a temporary or permanent nature.

221.3 A partially developed residential, industrial, institutional, governmental, or commercial lot.

222 **OWNER AND/OR OPERATOR –** Any person who owns, leases, operates, controls, or supervises a fugitive dust source subject to the requirements of this rule.

223 **PAVE –** To apply and maintain asphalt, concrete, or other similar material to a roadway surface (i.e., asphaltic concrete, concrete pavement, chip seal, or rubberized asphalt).

224 **PM_{10} NONATTAINMENT AREA –** An area designated by the EPA as exceeding National Ambient Air Quality Standards based upon data collected through air quality monitoring. The geographical boundary of Maricopa County's PM_{10} nonattainment area is defined as the rectangle determined by and including the following townships and ranges: T6N, R3W; T6N, R7E; T2S, R3W; T2S, R7E; and T1N, R8E. Maricopa County's PM_{10} nonattainment area includes the following cities: Surprise, Peoria, Glendale, Phoenix, Scottsdale, Tempe, Mesa, Gilbert, Chandler, Avondale, Buckeye, and Goodyear.

225 **PROPERTY LINE –** The boundaries of an area in which either a person causing the emission or a person allowing the emission has the legal use or possession of the property. Where such property is divided into one or more sub-tenancies, the property line(s) shall refer to the boundaries dividing the areas of all sub-tenancies.

226 **PUBLIC ROADWAYS –** Any roadways that are open to public travel.

227 **TRACKOUT/CARRYOUT –** Any and all bulk materials that adhere to and agglomerate on the surfaces of motor vehicles, haul trucks, and/or equipment (including tires) and that have fallen or been deposited onto an area accessible to the public.

228 **TRACKOUT CONTROL DEVICE –** A gravel pad, grizzly, wheel wash system, or a paved area, located at the point of intersection of an unpaved area and an area accessible to the public that controls or prevents vehicular trackout.

229 **UNPAVED ACCESS CONNECTIONS –** Any unpaved road connection with a paved public road.

230 **UNPAVED PARKING LOT –** Any area that is not paved and that is used for parking, maneuvering, material handling, or storing motor vehicles and equipment. An unpaved parking lot includes, but is not limited to, automobile impound yards, wrecking yards, automobile dismantling yards, salvage yards, material handling yards, and storage yards. For the purpose of this rule, maneuvering shall not include military maneuvers or exercises conducted on federal facilities.

231 **UNPAVED ROADWAY (INCLUDING ALLEYS) –** A road that is not paved and that is owned by federal, state, county, municipal, or other governmental or quasi-governmental agencies. For the purpose of this rule, an unpaved roadway (including

alleys) is not a horse trail, hiking path, bicycle path, or other similar path used exclusively for purposes other than travel by motor vehicles. An unpaved roadway (including alleys) includes designated or opened trail systems and service roads regardless of surface composition.

232 VACANT LOT – The definition of vacant lot is included in Section 221: Definition of Open Areas and Vacant Lots of this rule.

SECTION 300 – STANDARDS

301 GENERAL REQUIREMENTS FOR NON-TRADITIONAL SOURCES OF FUGITIVE DUST:

301.1 An owner and/or operator of a non-traditional source of fugitive dust shall be subject to the standards and/or requirements described in this rule. Failure to comply with any such standards and/or requirements is deemed a violation of this rule.

301.2 When an owner and/or operator of a non-traditional source of fugitive dust fails to stabilize disturbed surfaces of vacant lots as required in Sections 302.4 and 302.5 of this rule, the Control Officer shall commence enforcement of those rule provisions regarding the stabilization of disturbed surfaces of vacant lots that include the following:

a. Reasonable written notice to the owner or the owner's authorized agent or the owner's statutory agent that the unpaved disturbed surface of a vacant lot is required to be stabilized. The notice shall be given not less than 30 days before the day set for compliance and shall include a legal description of the property and the estimated cost to the county for the stabilization if the owner does not comply. The notice shall be either personally served or mailed by certified mail to the owner's statutory agent, to the owner at the owner's last known address or to the address to which the tax bill for the property was last mailed.

b. Authority to enter upon any said land/property where such non-traditional source of fugitive dust exists/where such disturbed surface area exists and to take remedial and/or corrective action as may be deemed appropriate to cope with and relieve, reduce, remedy, and/or stabilize such non-traditional source of fugitive dust/such disturbed surface area. Any cost incurred in connection with any such remedial or corrective action by the Maricopa County Air Quality Department or any person acting for the Maricopa County Air Quality Department shall be reimbursed by the owner and/or operator of such non-traditional source of fugitive dust.

302 CONTROL MEASURES FOR NON-TRADITIONAL SOURCES OF FUGITIVE DUST:

302.1 When engaged in the activities described in Sections 302.4 through 302.10 of this rule, the owner and/or operator of a non-traditional source of fugitive dust shall implement control measures as described in Sections 302.4 through 302.10 of this rule, as applicable.

302.2 Control measures shall be implemented to meet the visible emissions requirements and stabilization requirements, as required for each activity, and to achieve the compliance determination in Section 501 of this rule.

302.3 Failure to implement control measures as required by this rule, as applicable, and/or failure to maintain stabilization of a non-traditional source of fugitive dust with adequate surface crusting to prevent wind erosion as measured by the requirements in this rule shall be deemed a violation of this rule.

302.4 **Vehicle Use in Open Areas and Vacant Lots:** The owner and/or operator of a non-traditional source of fugitive dust that involves vehicle use in open areas and vacant lots shall be subject to the requirements described in Section 302.4(a) of this rule and, unless otherwise specified and/or required, shall comply with the control measures described in Section 302.4(b) of this rule and the additional requirements described in Section 302.4(c) of this rule.

a. Visible Emissions Requirements and Stabilization Requirements:

(1) The owner and/or operator of a non-traditional source of fugitive dust that involves vehicle use in open areas and vacant lots shall not cause or allow visible emissions of particulate matter, including fugitive dust, beyond the property line within which the emissions are generated.

(2) The owner and/or operator of a non-traditional source of fugitive dust that involves vehicle use in open areas and vacant lots shall stabilize the open areas and vacant lots on which vehicles are used to meet one of the following stabilization limitations:

(a) A soil crust; or

(b) A threshold friction velocity (TFV) corrected for non-erodible elements of 100 cm/second or higher; or

(c) Flat vegetative cover (i.e., attached [rooted] vegetation or unattached vegetative debris lying on the surface with a predominant horizontal orientation that is not subject to movement by wind) that is equal to at least 50%; or

(d) Standing vegetative cover (i.e., vegetation that is attached [rooted] with a predominant vertical orientation) that is equal to or greater than 30%; or

(e) Standing vegetative cover (i.e., vegetation that is attached [rooted] with a predominant vertical orientation) that is equal to or greater than 10% and where the threshold friction velocity is equal to or greater than 43 cm/second when corrected for non-erodible elements; or

(f) A percent cover that is equal to or greater than 10% for non-erodible elements; or

(g) An alternative test method approved in writing by the Control Officer and the Administrator.

b. Control Measures:

(1) Prevent motor vehicle and/or off-road vehicle trespassing, parking, and/or access by installing barriers, curbs, fences, gates, posts, shrubs, trees, or other effective control measures;

(2) Prevent motor vehicle and/or off-road vehicle trespassing, parking, and/or access by posting that consists of one of the following:

(a) A sign written in compliance with ordinance(s) of local, County, State, or Federal sign standards.

(b) An order of a government land management agency.

(c) Most current maps approved by a government land management agency.

(d) Virtual posting a government land management agency.

(3) Uniformly apply and maintain surface gravel or chemical/organic stabilizers to all areas disturbed by motor vehicles and/or off-road vehicles; or

(4) Apply and maintain an alternative control measure approved in writing by the Control Officer and the Administrator.

c. Additional Requirements:

(1) If open areas and vacant lots are 0.10 acre (4,356 square feet) or larger and have a cumulative of 500 square feet or more that are disturbed by

being driven over and/or used by motor vehicles, by off-road vehicles, or for material dumping, then the owner and/or operator shall implement one or more of the control measures described in Section 302.4(b) of this rule within 60 calendar days following the initial discovery by the Control Officer of disturbance or vehicle use on open areas and vacant lots.

(2) Within 30 calendar days following the initial discovery by the Control Officer of disturbance or vehicle use on open areas and vacant lots, the owner and/or operator shall provide in writing to the Control Officer a description and date of the control measure(s) to be implemented to prevent such disturbance or vehicle use on open areas and vacant lots.

(3) The owner and/or operator shall implement all control measures necessary to limit the disturbance or vehicle use on open areas and vacant lots in accordance with the requirements of this rule. Control measure(s) shall be considered effectively implemented when the open areas and vacant lots meet the requirements described in Section 302.4(a) of this rule.

(4) Once a control measure in Section 302.4(b) of this rule has been effectively implemented, then such open area or vacant lot is subject to the requirements of Section 302.5: Open Areas and Vacant Lots of this rule.

(5) Use of or parking on open areas and vacant lots by the owner and/or operator of such open areas and vacant lots shall not be considered vehicle use in open areas and vacant lots and shall not be subject to the requirements of Section 302.4(b) and sections 302.4(c)(1) through 302.4(c)(4) of this rule. Such open areas and vacant lots shall still meet the requirements described in Section 302.5 of this rule.

(6) Establishing initial landscapes without the use of mechanized equipment or conducting landscape maintenance without the use of mechanized equipment shall not be considered vehicle use in open areas and vacant lots and shall not be subject to the requirements of Section 302.4(b) and Sections 302.4(c)(1) through 302.4(c)(4) of this rule. Such open areas and vacant lots shall still meet the requirements described in Section 302.5 of this rule.

302.5 Open Areas and Vacant Lots: The owner and/or operator of a non-traditional source of fugitive dust that involves open areas and vacant lots shall be subject to the requirements described in Section 302.5(a) of this rule and, unless otherwise specified and/or required, shall comply with the control measures described in Section 302.5(b) of this rule and the additional requirements described in Section 302.5(c) of this rule.

a. Visible Emissions Requirements and Stabilization Requirements:

(1) The owner and/or operator of a non-traditional source of fugitive dust that involves open areas and vacant lots shall not cause or allow visible emissions of particulate matter, including fugitive dust, beyond the property line within which the emissions are generated.

(2) The owner and/or operator of a non-traditional source of fugitive dust that involves open areas and vacant lots shall stabilize the open areas and vacant lots to meet one of the following stabilization limitations:

(a) A soil crust; or

(b) A threshold friction velocity (TFV) corrected for non-erodible elements of 100 cm/second or higher; or

(c) Flat vegetative cover (i.e., attached [rooted] vegetation or unattached vegetative debris lying on the surface with a predominant horizontal orientation that is not subject to movement by wind) that is equal to at least 50%; or

(d) Standing vegetative cover (i.e., vegetation that is attached [rooted] with a predominant vertical orientation) that is equal to or greater than 30%; or

(e) Standing vegetative cover (i.e., vegetation that is attached [rooted] with a predominant vertical orientation) that is equal to or greater than 10% and where the threshold friction velocity is equal to or greater than 43 cm/second when corrected for non-erodible elements; or

(f) A percent cover that is equal to or greater than 10% for non-erodible elements; or

(g) An alternative test method approved in writing by the Control Officer and the Administrator.

b. Control Measures:

(1) Establish vegetative ground cover on all disturbed surface areas. Such control measure(s) must be maintained and reapplied, if necessary. Stabilization shall be achieved, per this control measure, within eight months after the control measure has been implemented; or

(2) Apply a dust suppressant to all disturbed surface areas; or

(3) Restore all disturbed surface areas within 60 calendar days following the initial discovery by the Control Officer of the disturbance, such that the vegetative ground cover and soil characteristics are similar to adjacent or nearby undisturbed native conditions. Such control measure(s) must be maintained and reapplied, if necessary. Stabilization shall be achieved, per such control measure, within eight months after such control measure has been implemented; or

(4) Uniformly apply and maintain surface gravel; or

(5) Apply and maintain an alternative control measure approved in writing by the Control Officer and the Administrator.

c. Additional Requirements:

(1) If open areas and vacant lots are 0.10 acre (4,356 square feet) or larger and have a cumulative of 500 square feet or more that are disturbed and if such disturbed area remains unoccupied, unused, vacant, or undeveloped for more than 15 days, then the owner and/or operator shall implement one or more of the control measures described in Section 302.5(b) of this rule within 60 calendar days following the initial discovery by the Control Officer of the disturbance on the open areas and vacant lots.

(2) Within 30 calendar days following the initial discovery by the Control Officer of the disturbance on the open areas and vacant lots, the owner and/or operator shall provide in writing to the Control Officer a description and date of the control measure(s) to be implemented.

(3) Control measure(s) shall be considered effectively implemented when the disturbance on the open areas and vacant lots meets the requirements described in Section 302.5(a) of this rule.

302.6 Unpaved Parking Lots: The owner and/or operator of a non-traditional source of fugitive dust that involves unpaved parking lots shall be subject to the requirements described in Section 302.6(a) of this rule and, unless otherwise specified and/or required, shall comply with one of the control measures described in Section 302.6(b) of this rule and the additional requirements described in Section 302.6(c) of this rule.

a. Visible Emissions Requirements and Stabilization Requirements:

(1) The owner and/or operator of a non-traditional source of fugitive dust that involves unpaved parking lots shall not cause or allow visible

emissions of particulate matter, including fugitive dust, beyond the property line within which the emissions are generated.

(2) The owner and/or operator of a non-traditional source of fugitive dust that involves unpaved parking lots shall not cause or allow visible fugitive dust emissions to exceed 20% opacity and shall not allow silt loading equal to or greater than 0.33 oz/ft^2. However, if silt loading is equal to or greater than 0.33 oz/ft^2, then the owner and/or operator shall not allow the silt content to exceed 8%.

b. Control Measures:

(1) For parking, maneuvering, ingress, and egress areas at developments other than residential buildings with four or fewer units that are utilized for more than 35 days during the calendar year:

(a) Install and maintain pavement; or

(b) Apply dust suppressant other than water and install, maintain, and use a suitable trackout control device that controls and prevents trackout and/or removes particulate matter from tires and the exterior surfaces of motor vehicles that traverse the site; or

(c) Uniformly apply and maintain surface gravel.

(2) For parking, maneuvering, ingress, and egress areas at developments other than residential buildings with four or fewer units that are utilized for 35 days or less during the calendar year:

(a) Install and maintain one of the control measures listed in Section 302.6(b)(1) of this rule; or

(b) Apply water and install, maintain, and use a suitable trackout control device that controls and prevents trackout and/or removes particulate matter from tires and the exterior surfaces of motor vehicles that traverse the site.

(3) For parking, maneuvering, ingress, and egress areas 3,000 square feet or more in size at residential buildings with four or fewer units install and maintain a paving or stabilization method authorized by the city, town, or county by code, ordinance, or permit.

c. Additional Requirements:

(1) Control measure(s) shall be considered effectively implemented when the unpaved parking lot meets the requirements described in Section 302.6(a) of this rule.

(2) If trackout occurs, the owner and/or operator shall repair and/or replace the control measure(s) and shall clean-up immediately such trackout from areas accessible to the public including curbs, gutters, and sidewalks when trackout extends a cumulative distance of 25 linear feet or more and at the end of the day for all other trackout.

302.7 Unpaved Roadways (Including Alleys): The owner and/or operator of unpaved roadways (including alleys) that are used by 150 vehicle trips or more per day in the PM_{10} nonattainment area shall be subject to the requirements described in Section 302.7(a) of this rule and, unless otherwise specified and/or required, shall comply with one of the control measures described in Section 302.7(b) of this rule and the additional requirements described in Section 302.7(c) of this rule.

a. Visible Emissions Requirements and Stabilization Requirements: The owner and/or operator of unpaved roadways (including alleys) shall not cause or allow visible fugitive dust emissions to exceed 20% opacity and shall not allow silt loading equal to or greater than 0.33 oz/ft^2. However, if silt loading is equal to or greater than 0.33 oz/ft^2, then the owner and/or operator shall not allow the silt content to exceed 6%.

b. Control Measures:

(1) Pave;

(2) Apply dust suppressants other than water; or

(3) Uniformly apply and maintain surface gravel.

c. Additional Requirements:

(1) If a person allows 150 vehicle trips or more per day on an unpaved roadway (including an alley) in the PM_{10} nonattainment area, then such person shall first implement one of the control measures described in Section 302.7(b) of this rule.

(2) A person, who allows 150 vehicle trips or more per day on an unpaved roadway (including an alley) in the PM_{10} nonattainment area, shall be responsible for conducting vehicle counts/traffic counts to determine if 150 vehicle trips or more per day occur on an unpaved roadway (including an alley). A traffic count shall measure vehicular traffic over a 48-hour period, which may consist of two non-consecutive 24-hour periods. Vehicular traffic shall be measured continuously during each

24-hour period. The average vehicle counts/traffic counts on the highest trafficked days shall be recorded and provided to the Control Officer in writing within 60 days of verbal or written request by the Control Officer.

(3) Control measure(s) shall be considered effectively implemented under the following conditions:

(a) When the unpaved roadway (including an alley) meets the requirements described in Section 302.7(a) of this rule.

(b) When one of the control measures described in Section 302.7(b) of this rule is implemented on 5 miles of unpaved roadways (including alleys) having vehicle traffic of 150 vehicle trips or more per day within one calendar year beginning in calendar year of 2008. If the control measure described in Section 302.7(b)(2) of this rule is implemented, the unpaved roadways (including alleys) must be maintained so as to comply with Appendix C of these rules.

302.8 Livestock Activities: The owner and/or operator of a non-traditional source of fugitive dust that involves livestock activities shall be subject to the requirements described in Section 302.8(a) of this rule and, unless otherwise specified and/or required, shall comply with the control measures described in Section 302.8(b) of this rule and the additional requirements described in Section 302.8(c) of this rule.

a. Visible Emissions Requirements:

(1) For unpaved access connections and unpaved feed lane access areas, the owner and/or operator shall not cause or allow visible fugitive dust emissions to exceed 20% opacity.

(2) For corrals, pens, and arenas, the owner and/or operator shall not cause or allow visible fugitive dust emissions to exceed 20% opacity for a period aggregating more than three minutes in any 60-minute period.

(3) The owner and/or operator shall not cause or allow visible emissions of particulate matter, including fugitive dust, beyond the property line within which the emissions are generated.

b. Control Measures: The owner and/or operator of a non-traditional source of fugitive dust that involves livestock activities shall implement the control measures described in this section of this rule. When selecting a control measure, the owner and/or operator may consider site-specific logistics of the livestock activities. When doing so, some control measures may be more reasonable to implement than others. Any control measure that is implemented must achieve the applicable standards and requirements

described in Sections 302.8(a) and (c) of this rule, as determined by the corresponding test methods, as applicable, and must achieve other applicable standards set forth in this rule. The owner and/or operator may submit a request to the Control Officer and the Administrator for the use of alternative control measure(s). The owner and/or operator may implement the alternative control measure only after the Control Officer and the Administrator have granted the petition.

(1) For unpaved access connections and unpaved feed lane access areas:

(a) Apply water and install, maintain, and use a suitable trackout control device that controls and prevents trackout and/or removes particulate matter from tires and the exterior surfaces of motor vehicles that traverse the site;

(b) Apply and maintain pavement, gravel (maintained to a depth of four inches), or asphaltic roadbase;

(c) Apply and maintain dust suppressants other than water; or

(d) Limit vehicle trips to no more than 20 per day per road, limit vehicle speeds to no more than 15 miles per hour, and restrict public access to private roads by installing barriers, curbs, fences, gates, posts, or signs written in compliance with ordinance(s) of local, County, State, or Federal sign standards.

(2) For bulk material hauling, including animal waste, off-site and crossing and/or accessing an area accessible to the public:

(a) Load all vehicles used to haul bulk material, including animal waste, such that the freeboard is not less than three inches;

(b) Prevent spillage or loss of bulk material, including animal waste, from holes or other openings in the cargo compartment's floor, sides, and/or tailgate(s);

(c) Cover cargo compartment with a tarp or other suitable closure; and

(d) Install, maintain, and use a suitable trackout control device that controls and prevents trackout and/or removes particulate matter from tires and the exterior surfaces of motor vehicles that traverse the site.

(3) For corrals, pens, and arenas:

(a) Apply water;

(b) Install shrubs and/or trees within 50 feet to 100 feet of corrals, pens, and arenas;

(c) Scrape and/or remove manure;

(d) Apply a fibrous layer (i.e., wood chips) in working areas;

(e) Provide shaded areas; or

(f) Apply and maintain an alternative control measure approved in writing by the Control Officer and the Administrator.

c. Additional Requirements:

(1) The owner and/or operator of livestock activities shall implement at least one of the control measures from each of the following three sections of this rule, as applicable: Section 302.8(b)(1), Section 302.8(b)(2), and Section 302.8(b)(3). In lieu of implementing at least one control measure from each of the following three sections of this rule, as applicable: Section 302.8(b)(1), Section 302.8(b)(2), and Section 302.8(b)(3), the owner and/or operator of livestock activities shall implement an alternative control measure approved in writing by the Control Officer and the Administrator.

(2) Control measure(s) shall be considered effectively implemented when the livestock activities meet the requirements described in Section 302.8(a) of this rule.

(3) If trackout occurs, the owner and/or operator shall repair and/or replace the control measure(s) and shall clean up immediately such trackout from areas accessible to the public including curbs, gutters, and sidewalks when trackout extends a cumulative distance of 25 linear feet or more and at the end of the day for all other trackout.

302.9 Erosion-Caused Deposition of Bulk Materials Onto Paved Surfaces: The owner and/or operator of a non-traditional source of fugitive dust that involves erosion-caused deposition of bulk materials onto paved surfaces shall comply with the control measures described in Section 302.9(a) of this rule and the additional requirements described in Section 302.9(b) of this rule.

a. Control Measures:

(1) Remove any and all such deposits by utilizing the appropriate control measures within 24 hours of the deposits' identification or prior to the

resumption of traffic on pavement, where the pavement area has been closed to traffic; and

(2) Dispose of deposits in such a manner so as not to cause another source of fugitive dust.

b. Additional Requirements:

(1) In the event that erosion-caused deposition of bulk materials or other materials occurs on any adjacent paved roadway, paved parking lot, curb, gutter, or sidewalk, the owner and/or operator of the property from which the deposition eroded shall implement both of the control measures described in Section 302.9(a) of this rule.

(2) Failure to comply with both of the control measures described in Section 302.9(a) of this rule shall constitute a violation of this rule.

302.10 Easements, Rights-of-Way, and Access Roads for Utilities (Transmission of Electricity, Natural Gas, Oil, Water, and Gas): The owner and/or operator of a non-traditional source of fugitive dust that involves easements, rights-of-way, and access roads for utilities (transmission of electricity, natural gas, oil, water, and gas) that are used by 150 vehicle trips or more per day in the PM_{10} nonattainment area shall be subject to the requirements described in Section 302.10(a) of this rule and unless otherwise specified and/or required, comply with one of the control measures described in Section 302.10(b) of this rule and the additional requirements described in Section 302.10(c) of this rule.

a. Visible Emissions Requirements and Stabilization Requirements: The owner and/or operator of a non-traditional source of fugitive dust that involves easements, rights-of-way, and access roads for utilities (transmission of electricity, natural gas, oil, water, and gas) shall not cause or allow visible fugitive dust emissions to exceed 20% opacity and shall not allow silt loading equal to or greater than 0.33 oz/ft^2. However, if silt loading is equal to or greater than 0.33 oz/ft^2, then the owner and/or operator shall not allow the silt content to exceed 6%.

b. Control Measures:

(1) Pave;

(2) Apply dust suppressants other than water;

(3) Uniformly apply and maintain surface gravel; or

(4) Install locked gates at each entry point.

c. Additional Requirements:

(1) If an owner and/or operator allows 150 vehicle trips or more per day to use an easement, right-of-way, and access road for utilities (transmission of electricity, natural gas, oil, water, and gas) in the PM_{10} nonattainment area, then such owner and/or operator shall first implement one of the control measures described in Section 302.10(b) of this rule.

(2) A person, who allows 150 vehicle trips or more per day to use an easement, right-of-way, and access road for utilities (transmission of electricity, natural gas, oil, water, and gas) in the PM_{10} nonattainment area, shall be responsible for conducting vehicle counts/traffic counts to determine if 150 vehicle trips or more per day occur on an easement, right-of-way, and access road for utilities (transmission of electricity, natural gas, oil, water, and gas). A traffic count shall measure vehicular traffic over a 48-hour period, which may consist of two non-consecutive 24-hour periods. Vehicular traffic shall be measured continuously during each 24-hour period. The average vehicle counts/traffic counts on the highest trafficked days shall be recorded and provided to the Control Officer in writing within 60 days of verbal or written request by the Control Officer.

(3) Control measure(s) shall be considered effectively implemented when the easement, right-of-way, and access road for utilities (transmission of electricity, natural gas, oil, water, and gas) meets the requirements described in Section 302.10(a) of this rule.

SECTION 400 – ADMINISTRATIVE REQUIREMENTS (NOT APPLICABLE)

SECTION 500 – MONITORING AND RECORDS

501 COMPLIANCE DETERMINATION: To determine compliance with this rule, the following test methods shall be followed:

501.1 Opacity Observations:

a. Opacity observations to measure visible emissions shall be conducted in accordance with the techniques specified in EPA Reference Method 203B (Visual Determination of Opacity of Emissions from Stationary Sources for Time-Exception Regulations). Emissions shall not exceed the applicable opacity standards of this rule for a period aggregating more than three minutes in any 60-minute period.

b. Opacity observations to determine compliance with Sections 302.6, 302.7, 302.8(a)(1), 302.8(a)(2), and 302.10 of this rule shall be conducted in

accordance with the techniques specified in Appendix C (Fugitive Dust Test Methods) of these rules.

501.2 Stabilization observations for unpaved parking lots and/or unpaved roadways (including alleys) shall be conducted in accordance with Appendix C, Section 2.1 (Test Methods for Stabilization for Unpaved Roads and Unpaved Parking Lots) of these rules.

501.3 Stabilization observations for vehicle use in open areas and vacant lots and/or open areas and vacant lots shall be conducted in accordance with the following:

a. Appendix C, Section 2.3 (Test Methods for Stabilization: Soil Crust Determination: The Drop Ball Test) of these rules; or

b. Appendix C, Section 2.4 (Test Methods for Stabilization: Determination of Threshold Friction Velocity [TFV]: Sieving Field Procedure) of these rules, where the threshold friction velocity (TFV) for disturbed surface areas corrected for non-erodible elements is 100 cm/second or higher; or

c. Appendix C, Section 2.5 (Test Methods for Stabilization: Determination of Flat Vegetative Cover) of these rules, where flat vegetation cover (i.e., attached [rooted] vegetation or unattached vegetative debris lying on the surface with a predominant horizontal orientation that is not subject to movement by wind) is equal to at least 50%; or

d. Appendix C, Section 2.6 (Test Methods for Stabilization: Determination of Standing Vegetative Cover) of these rules, where standing vegetation cover (i.e., vegetation that is attached [rooted] with a predominant vertical orientation) is equal to or greater than 30%; or

e. Appendix C, Section 2.6 (Test Methods for Stabilization: Determination of Standing Vegetative Cover) of these rules, where the standing vegetation cover (i.e., vegetation that is attached [rooted] with a predominant vertical orientation) is equal to or greater than 10% and where the threshold friction velocity, corrected for non-erodible elements, is equal to or greater than 43 cm/second; or

f. Appendix C, Section 2.7 (Test Methods for Stabilization: Rock Test Method) of these rules where a percent cover is equal to or greater than 10% for non-erodible elements.

g. An alternative test method approved in writing by the Control Officer and the Administrator.

502 **RECORDKEEPING:** Any person subject to the requirements of this rule shall compile and retain records that provide evidence of control measure application (i.e., receipts

and/or purchase records). Such person shall describe, in the records, the type of treatment or control measure, extent of coverage, and date applied. Upon verbal or written request by the Control Officer, such person shall provide the records and supporting documentation as soon as possible but no later than 48 hours, excluding weekends. If the Control Officer is at the site where requested records are kept, such person shall provide the records without delay.

503 RECORDS RETENTION: Copies of the records required by Section 502 (Recordkeeping) of this rule shall be retained for at least two years.

REGULATION III - CONTROL OF AIR CONTAMINANTS

RULE 311
PARTICULATE MATTER FROM PROCESS INDUSTRIES

INDEX

SECTION 100 - GENERAL

101 PURPOSE

102 APPLICABILITY

SECTION 200 - DEFINITIONS

201 AFFECTED OPERATION

202 APPROVED EMISSION CONTROL SYSTEM

203 PARTICULATE MATTER

204 PARTICULATE MATTER EMISSIONS

205 PROCESS WEIGHT

206 PROCESS WEIGHT RATE

207 UNCOMBINED WATER

SECTION 300 - STANDARDS

301 LIMITATIONS - PROCESS INDUSTRIES

302 APPLICABILITY OF EMISSION LIMITS FOR COMBINED EMISSIONS FROM SIMILAR OPERATIONS

303 LIMITATIONS - PORTLAND CEMENT PLANTS

304 APPROVED EMISSION CONTROL SYSTEM REQUIRED

305 OPERATION AND MAINTENANCE (O&M) PLAN REQUIRED

306 EXEMPTIONS

SECTION 400 - ADMINISTRATIVE REQUIREMENTS

401 COMPLIANCE SCHEDULE - O&M PLAN

SECTION 500 - MONITORING AND RECORDS

501 PROVIDING AND MAINTAINING RECORDS

502 RECORD KEEPING AND REPORTING

503 RECORD RETENTION

504 TEST METHODS

Revised 07/13/88
Revised 08/02/93
Revised 07/02/03

MARICOPA COUNTY
AIR POLLUTION CONTROL REGULATIONS

REGULATION III - CONTROL OF AIR CONTAMINANTS

RULE 311
PARTICULATE MATTER FROM PROCESS INDUSTRIES

SECTION 100 - GENERAL

101 PURPOSE: To limit the discharge of particulate matter into the atmosphere by establishing emission rates based on process weight.

102 APPLICABILITY: This rule shall apply to any affected operation which is not subject to Rules 313, 316, 317, 319, 322, and 323 which regulate particulate matter from specific sources. All sources regulated by this rule shall also comply with Rule 310.

SECTION 200 - DEFINITIONS: For the purpose of this rule, the following definitions shall apply:

201 AFFECTED OPERATION - An operation that emits particulate matter into the ambient air as a result of processing materials.

202 APPROVED EMISSION CONTROL SYSTEM - A system for reducing particulate matter emissions, consisting of collection and/or control devices which are approved in writing by the Control Officer and are designed and operated in accordance with good engineering practice.

203 PARTICULATE MATTER - Any material, except uncombined water, which has a nominal aerodynamic diameter smaller than 100 microns (micrometers), and which exists in a finely divided form as a liquid or solid at actual conditions.

204 PARTICULATE MATTER EMISSIONS - Any and all finely divided solid or liquid materials other than uncombined water, emitted to the ambient air as measured by applicable state and federal test methods.

205 PROCESS WEIGHT - The total weight of all materials introduced into an operation, excluding liquids and gases used solely as fuels, air which is not consumed as a reactant, and combustion air.

206 PROCESS WEIGHT RATE - A rate established as follows:

206.1 For continuous or long-run steady-state operations, the total process weight for the entire period of continuous operation or for a typical portion thereof, divided by the number of hours of such period or portion thereof.

206.2 For cyclical or batch operations, the total process weight for a period which covers a complete operation or an integral number of cycles, divided by the hours of actual process operation during such period.

207 UNCOMBINED WATER - Condensed water containing no more than analytical trace amounts of other chemical elements or compounds.

SECTION 300 - STANDARDS

301 LIMITATIONS - PROCESS INDUSTRIES: No person shall discharge or cause or allow the discharge of particulate matter emissions into the ambient air from any affected operation in excess of the allowable hourly emission rate determined by the following equations:

301.1 Process Weight Rates Less Than or Equal to 60,000 Pounds Per Hour: Determination of the allowable hourly emission rates (E) for process weight rates up to 60,000 lbs/hr shall be accomplished by use of the equation:

$E = 3.59\ P^{0.62}$ (P = less than or equal to 30 tons/hr)

where:

E = Emissions in pounds per hour, and

P = Process weight rate in tons per hour.

301.2 Process Weight Rates Greater Than 60,000 Pounds Per Hour: Determination of the allowable hourly emission rates (E) for process weight rates in excess of 60,000 lbs/hr shall be accomplished by the use of the equation:

$E = 17.31\ P^{0.16}$ (P = greater than 30 tons/hr)

where "E" and "P" have the same meanings as in Section 301.1 of this rule.

302 APPLICABILITY OF EMISSION LIMITS FOR COMBINED EMISSIONS FROM SIMILAR OPERATIONS: The total process weight from all similar operations at a facility, plant or premises shall be used for determining the maximum allowable emissions of particulate matter.

303 LIMITATIONS - PORTLAND CEMENT PLANTS: Portland cement plants shall be subject to the New Source Performance Standards (NSPS), 40 CFR 60, Subpart F, referenced in Rule 360 of these Rules and Regulations.

304 APPROVED EMISSION CONTROL SYSTEM REQUIRED: For affected operations which may exceed the applicable standards set forth in Sections 301 through 302 of this rule, an owner or operator may comply by installing and operating an approved emission control system.

305 OPERATION AND MAINTENANCE (O&M) PLAN REQUIRED: No person required to use an approved emission control system to reduce emissions as specified in the conditions of a valid permit in accordance with this rule shall do so without complying with an operation and maintenance plan that has been approved by the Control Officer. This plan shall specify key system operating parameters such as temperatures, transfer rates, pressures and/or flow rates necessary to determine compliance with this rule and describe in detail procedures to maintain the approved emission control system. The Control Officer's written approval of this plan shall be required for compliance with this rule to be achieved.

306 EXEMPTIONS: The provisions of Section 301 of this rule shall not apply to incinerators or fuel burning facilities.

SECTION 400 - ADMINISTRATIVE REQUIREMENTS

401 COMPLIANCE SCHEDULE - OPERATION AND MAINTENANCE (O&M) PLAN: Any person employing an approved emission control system on the effective date of this rule shall by December 1, 1993, file an O&M Plan with the Control Officer in accordance with Section 501 of this rule.

SECTION 500 - MONITORING AND RECORDS

501 PROVIDING AND MAINTAINING MONITORING DEVICES: No person required to use an approved emission control system to control particulate emissions pursuant to this rule shall do so without first providing, properly installing, operating and maintaining in calibration and in good working order devices for indicating temperatures, pressures, transfer rates, rates of flow, or other operating conditions necessary to determine if air pollution control equipment is functioning properly and is properly maintained as described in an approved O&M Plan.

502 RECORDKEEPING AND REPORTING: Any person subject to this rule shall comply with the following requirements. Any records and data required by this section shall be kept on site at all times in a consistent and complete manner and be made available without delay to the Control Officer or his designee upon request.

502.1 De Minimis Limitation for Affected Operations Requiring Records: No person responsible for the operation of any particulate-emitting affected operation which processes more than 50 pounds of material daily shall conduct such operations unless detailed daily records are maintained.

502.2 Minimum Recordkeeping Required: These records shall be updated each day of operation and include at a minimum the following information: a record of the total weight of all process materials including raw materials, additives, fuels, etc., which are put into a process flow at the beginning of each batch process shall be kept on site. This shall include all materials which participate in the process and are changed in mass, form, state or in other characteristics by means of their interaction in the given process. The duration of each separate batch process shall also be recorded.

a. Batch process records: Maintain a record of the total weight of all process materials including raw materials, additives, and fuels which are put into a process flow at the beginning of each batch process shall be kept. This shall include all materials which participate in the process and are changed in mass, form, state or in other characteristics by means of their interaction in the given process. The duration of each separate batch process shall also be recorded.

b. Continuous or semi-continuous process records: Maintain a daily record of the weight of all process material entering into each process including raw materials, additives, fuels, the start time and the duration of each process run. In addition to the foregoing, records shall be kept for processes which run continuously for more than 24 hours. Such records shall include the total weight of any material entering into the process over the entire duration of the process run from start up to shut down and the total elapsed time of operation.

502.3 Operation and Maintenance: Maintain a continuous record of the periods of time an approved emission control system is used to comply with this rule and maintain daily records of the Operation and Maintenance Plan's key system operating parameters. The records shall account for any periods of production when the control system was not operating and maintain records of all maintenance performed according to the O&M Plan.

503 RECORD RETENTION: Copies of reports, logs and supporting documentation required by the Control Officer shall be retained at least five years. Records and information required by this rule shall also be retained for at least five years.

504 TEST METHODS ADOPTED BY REFERENCE: The EPA test methods as they exist in the Code of Federal Regulations (CFR) (July 1, 2001) as listed below, are

adopted by reference. These adoptions by reference include no further editions or amendments. Copies of test methods referenced in this Section are available at the Maricopa County Environmental Services Department, 1001 N. Central Avenue, Phoenix, AZ. 85004-1942. When more than one test method is permitted for a determination, an exceedance of the limits established in this rule determined by any of the applicable test methods constitutes a violation of this rule.

504.1 EPA Reference Method 1 (" Sample and Velocity Traverse for Stationary Sources"), 1A (" Sample and Velocity Traverses for Stationary Sources with Small Stacks and Ducts") (40 CFR 60, Appendix A).

504.2 EPA Reference Method 2 (" Determination of Stack Gas Velocity and Volumetric Flow Rate "), 2A (" Direct Measurement of Gas Volume Through Pipes and Small Ducts), 2C (" Determination of Stack Gas Velocity and Volumetric Flow Rate in Small Stacks or Ducts"), and 2D (" Measurement of Gas Volumetric Flow Rates in Small Pipes and Ducts") (40 CFR 60, Appendix A).

504.3 EPA Reference Method 3 (" Gas Analysis for the Determination of Dry Molecular Weight"), 3A (" Determination of Oxygen and Carbon Dioxide Concentrations in Emissions from Stationary Sources (Instrumental Analyzer Procedure), 3B (" Gas Analysis for the Determination of Emission Rate Correction Factor of Excess Air"), 3C (" Determination of Carbon Dioxide, Methane, Nitrogen and Oxygen from Stationary Sources") (40 CFR 60, Appendix A).

504.4 EPA Reference Method 4 ("Determination of Moisture Content in Stack Gases") (40 CFR 60, Appendix A).

504.5 EPA Reference Method 5 (" Determination of Particulate Emissions from Stationary Sources") (40 CFR 60, Appendix A) and possibly, if requested by the Control Officer, EPA Reference Method 202 (" Determination of Condensable Particulate Emissions from Stationary Sources") (40 CFR 51, Appendix M).

504.6 EPA Reference Method 9 (" Visual Determination of the Opacity Emissions from Stationary Sources") (40 CFR 60, Appendix A).

REGULATION III - CONTROL OF AIR CONTAMINANTS

RULE 312
ABRASIVE BLASTING

INDEX

SECTION 100 - GENERAL

101 PURPOSE

102 APPLICABILITY

103 EXEMPTIONS

SECTION 200 - DEFINITIONS

201 ABRASIVE

202 ABRASIVE BLASTING OPERATION

203 CERTIFIED ABRASIVES

204 CONFINED ENCLOSURE

205 EMISSION CONTROL SYSTEM (ECS)

206 HYDROBLASTING

207 MULTIPLE NOZZLES

208 OPACITY

209 UNCONFINED BLASTING

210 VACUUM BLASTING

211 WET ABRASIVE BLASTING

212 WIND EVENT

SECTION 300 - STANDARDS

301 LIMITATIONS FOR BLASTING

302 REQUIREMENTS FOR UNCONFINED BLASTING

303 REQUIREMENTS FOR CONFINED BLASTING

304 REQUIREMENTS FOR ECS AND MONITORING DEVICES

305 OPACITY LIMITATION

306 WIND EVENT

307 TRAFFIC MARKERS

308 WORK PRACTICES

SECTION 400 - ADMINISTRATIVE REQUIREMENTS

401 COMPLIANCE SCHEDULE

SECTION 500 - MONITORING AND RECORDS

501 RECORDKEEPING AND REPORTING

502 RECORDS RETENTION

503 COMPLIANCE DETERMINATION

504 CERTIFIED ABRASIVES LIST ADOPTED BY REFERENCE

505 OPACITY OBSERVATIONS

506 TEST METHODS ADOPTED BY REFERENCE

Revised 07/13/88
Revised 07/02/03

MARICOPA COUNTY
AIR POLLUTION CONTROL REGULATIONS

REGULATION III - CONTROL OF AIR CONTAMINANTS

RULE 312
ABRASIVE BLASTING

SECTION 100 - GENERAL

101 **PURPOSE:** To limit particulate matter emissions from abrasive blasting operations.

102 **APPLICABILITY:** This rule applies to abrasive blasting operations.

103 **EXEMPTIONS:** This rule shall not apply to the following:

103.1 Self-contained, enclosed abrasive blasting equipment that is not vented to the atmosphere or is vented inside a building with the exhaust directed away from any opening to the building exterior, or

103.2 Hydroblasting.

SECTION 200 - DEFINITIONS: For the purpose of this rule, the following definitions shall apply: See Rule 100 (General Provisions and Definitions) of these rules for definitions of terms that are used but not specifically defined in this rule:

201 **ABRASIVE** – A solid substance used in a blasting operation. This includes but is not limited to sand, slag, steel, shot, garnet, walnut shells, or carbon dioxide pellets.

202 **ABRASIVE BLASTING OPERATION** – Cleaning, polishing, conditioning, removing or preparing a surface by propelling a stream of abrasive with pressurized liquid or compressed air against the surface.

203 **CERTIFIED ABRASIVES** – An abrasive, that has been certified by the California Air Resources Board (CARB) in accordance with Section 92530 of Title 17, Division 3, Chapter 1, Subchapter 6, Article 4 of the California Code and Regulations effective as of December 26, 2000. An abrasive purchased during the certified period remains certified for use following its expiration date.

204 **CONFINED ENCLOSURE** – A structure that is used, in whole or in part, for abrasive blasting operations. The structure consists of three or four sides, a roof or cover, with or without an exhaust to the atmosphere. The blasting shall be directed away from the open side of the structure.

205 EMISSION CONTROL SYSTEM (ECS)– A system for reducing particulate matter emissions, consisting of both collection and control devices, that is designed and operated in accordance with good engineering practice, and, if permitted, is approved in writing by the Control Officer.

206 HYDROBLASTING – Any abrasive blasting operation that uses a pressurized liquid as the propelling force.

207 MULTIPLE NOZZLES – Two or more nozzles positioned in such close proximity that their separate plumes are indistinguishable.

208 OPACITY – A condition of the atmosphere, or any part thereof, in which an air contaminant partially or wholly obscures the view of an observer.

209 UNCONFINED BLASTING – Any abrasive blasting operation that is not performed in a confined enclosure.

210 VACUUM BLASTING – Any abrasive blasting operation in which the spent abrasive, surface material, and dust are immediately collected by a vacuum device.

211 WET ABRASIVE BLASTING – Any abrasive blasting operation that uses compressed air as the propelling force, abrasive, and adds a liquid to minimize the plume.

212 WIND EVENT – An occurrence when the 60-minute average wind speed is greater than 25 miles per hour.

SECTION 300 - STANDARDS

301 LIMITATIONS FOR BLASTING: All abrasive blasting operations shall be performed in a confined enclosure, unless one of the following conditions are met, in which case unconfined blasting according to Section 302 of this rule may be performed:

301.1 The item to be blasted exceeds 8 ft. in any one dimension, or

301.2 The surface being blasted is fixed in a permanent location, cannot easily be moved into a confined enclosure, and the surface is not normally dismantled or moved prior to abrasive blasting.

302 REQUIREMENTS FOR UNCONFINED BLASTING: At least one of the following control measures shall be used:

302.1 Wet abrasive blasting,

302.2 Vacuum blasting, or

302.3 Dry abrasive blasting, provided that all of the following conditions are met:

a. Perform only on a metal substrate.
b. Use only certified abrasive for dry unconfined blasting.
c. Blast only paint that is lead free (i.e. the lead content is less than 0.1percent).
d. Perform the abrasive blasting operation directed away from unpaved surfaces.
e. Use the certified abrasive not more than once unless contaminants are separated from the abrasive through filtration and the abrasive conforms to its original size.

303 REQUIREMENTS FOR CONFINED BLASTING: Dry abrasive blasting in a confined enclosure with a forced air exhaust shall be conducted by implementing either of the following:
a. Using a certified abrasive, or
b. Venting to an ECS.

304 REQUIREMENTS FOR ECS AND MONITORING DEVICES: The following requirements apply to blasting equipment that vents through a required ECS and requires a Maricopa County permit under Rule 200 of these rules. Buildings and/or enclosures are not considered control equipment. Equipment that meets the following two criteria and is operated and maintained in accordance with manufacturer's specifications, is exempt from the requirements of this section:
a. Is self-contained and the total internal volume of the blast section is 50 cubic feet or less, and
b. Is vented to an ECS.

304.1 Operation and Maintenance (O&M) Plan Required for Emission Control System (ECS)-

a. An owner or operator shall provide and maintain, readily available at all times, an O&M Plan for any ECS, other emission processing equipment, and ECS monitoring devices that are used pursuant to this rule or to an air pollution control permit.
b. The owner or operator shall submit to the Control Officer for approval the O&M Plans of each ECS and each ECS monitoring device that is used pursuant to this rule. If the O&M plan has not been filed, any owner or operator employing an approved existing ECS on the effective date of this rule shall by December 18, 2003 have an O&M plan filed with the Control Officer.
c. The owner or operator shall comply with all the identified actions and schedules provided in each O&M Plan.

304.2 Installing And Maintaining ECS Monitoring Devices – An owner or operator operating an ECS pursuant to this rule shall properly install and maintain in calibration, in good working order and in operation, devices described in the facility's O&M Plan that indicate temperatures, pressures,

rates of flow, or other operating conditions necessary to determine if air pollution control equipment is functioning properly.

305 OPACITY LIMITATION: No owner or operator shall discharge into the atmosphere from any abrasive blasting operation any air contaminant for an observation period or periods aggregating more than three minutes in any sixty minute period an opacity equal to or greater than 20 percent. An indicated excess will be considered to have occurred if any cumulative period of 15-second increments totaling more than three minutes within any sixty minute period was in excess of the opacity standard.

306 WIND EVENT – No dry unconfined abrasive blasting operation shall be conducted during a wind event.

307 TRAFFIC MARKERS – Surface preparation for raised traffic delineating markers and pavement marking removal using abrasive blasting operations shall be performed by wet blasting, hydroblasting or vacuum blasting. Dry blasting may be performed using only certified abrasives when:

307.1 Removing pavement markings of less than 1,000 square feet

307.2 Performing surface preparation for raised traffic delineating markers of less than 1,000 square feet.

308 WORK PRACTICES:

308.1 Unconfined Blasting: The owner or operator shall clean up spent abrasive material with a potential to be transported during a wind event and, until removal occurs, shall, at a minimum, meet the provisions of Rule 310 of these rules regarding work practices.

308.2 Confined Blasting: At the end of the work shift the owner or operator shall clean up spillage, carry-out, and/or trackout of any spent abrasive material with a potential to be transported during a wind event.

SECTION 400 – ADMINISTRATIVE REQUIREMENTS

401 COMPLIANCE SCHEDULE: All abrasive blasting operations shall be conducted in compliance with this rule upon adoption.

SECTION 500 - MONITORING AND RECORDS

501 RECORDKEEPING AND REPORTING: At a minimum, an owner or operator subject to this rule shall keep the following records onsite, that are applicable to all abrasive blasting operations. Additional reporting may be required by an air quality permit:

501.1 If blasting operations occur daily or are a part of a facility's primary work activity, then the following shall be kept as a record:

- **a.** A list of the blasting equipment,
- **b.** The description of the type of blasting as confined, unconfined, sand, wet, or other,
- **c.** The locations of the blasting equipment or specify if the equipment is portable,
- **d.** A description of the ECS associated with the blasting operations,
- **e.** The days of the week blasting occurs, and
- **f.** The normal hours of operation.

501.2 If blasting operations occur periodically, then the following shall be kept as a record:

- **a.** The date the blasting occurs,
- **b.** The blasting equipment that is operating,
- **c.** A description of the type of blasting, and
- **d.** A description of the ECS associated with the blasting operations.

501.3 The type and amount of solid abrasive material consumed on a monthly basis. Include name of certified abrasive used, as applicable.

501.4 Material Safety Data Sheets (MSDS) or results of any lead testing that was performed on paint that is to be removed via unconfined blasting, as applicable.

502 RECORDS RETENTION: Copies of reports, logs, and supporting documentation required by this rule shall be retained for at least 5 years at permitted Title V sources and for at least 2 years at Non-Title V sources.

503 COMPLIANCE DETERMINATION:

503.1 Control Device Efficiency – Manufacturer's specifications, testing results, or engineering data that demonstrate control efficiency shall be submitted upon request of the Control Officer.

503.2 Paint Lead Level – Prior to unconfined blasting of paint, the owner or operator must be the generator with firsthand knowledge of lead content in the paint, or retain evidence of the lead level from the material MSDS or from a lead test performed in accordance with Section 506 of the rule. Unconfined blasting is prohibited if the lead content of the material is >0.1percent.

504 CERTIFIED ABRASIVES LIST ADOPTED BY REFERENCE: The list of abrasives certified for permissible dry unconfined blasting is found in Executive Order G-00-066 in accordance with the California Code of Regulations, Subchapter 6, Title 17, Section 92530, Exhibit A effective as of December 26, 2000 and is adopted by reference. A copy of the list of currently certified abrasives can also be obtained at

Maricopa County Environmental Services, 1001 North Central Avenue, Phoenix, AZ 85004-1942.

505 OPACITY OBSERVATIONS: Opacity shall be determined by observations of visible emissions conducted in accordance with EPA Reference Method 9 and with the following provisions:

505.1 Emissions from unconfined blasting shall be observed at the densest point of the emission from the closest point of discharge, after a major portion of the spent abrasives has fallen out.

505.2 Emissions from unconfined blasting employing multiple nozzles shall be considered a single source unless it can be demonstrated by the owner or operator that each nozzle, evaluated separately, meets the emission standards of this rule.

505.3 Emissions from confined blasting shall be observed at the densest point after the air contaminant leaves the enclosure or associated ECS.

506 TEST METHODS ADOPTED BY REFERENCE: The EPA test methods as they exist in the Code of Federal Regulations (CFR), July 1, 2001, as listed below, are adopted by reference. This adoption by reference includes no future editions or amendments. Copies of these test methods may be obtained at the Maricopa County Environmental Services Department – Air Quality Division, 1001 North Central Avenue Suite 200, Phoenix, AZ 85004-1942. When more than one test method as listed in Sections 506.2 through 506.7 is permitted for the same determination, an exceedance of the limits established in this rule determined by any of the applicable test methods constitutes a violation.

506.1 EPA Test Method 9 ("Visual Determination of the Opacity of Emissions from Stationary Sources") (40 CFR 60, Appendix A).

506.2 EPA Test Method for Evaluating Solid Wastes (Lead), SW-846 Method 6010B (Inductively Coupled Plasma-Atomic Emission Spectrometry).

506.3 EPA Test Method for Testing Lead by Atomic Absorption, Direct Aspiration, Method 0239.2 (EPA Report 600/4-79-020).

506.4 EPA Test Method for Testing Lead, SW-846 Method 3050B (Acid Digestion of Sediments, Sludges and Soils).

506.5 EPA Test Method for Testing Lead, SW-846 Method 7420 (Lead (Atomic Absorption, Direct Aspiration).

506.6 OSHA Method ID-121 (Metal and Metalloid Particulates in Workplace Atmospheres [Atomic Absorption]).

506.7 OSHA Method ID-125G (Metal and Metalloid Particulates in Workplace Atmospheres [ICP Analysis]).

REGULATION III – CONTROL OF AIR CONTAMINANTS

RULE 313
INCINERATORS, BURN-OFF OVENS, AND CREMATORIES

INDEX

SECTION 100 – GENERAL

101 PURPOSE
102 APPLICABILITY
103 EXEMPTIONS

SECTION 200 – DEFINITIONS

201 AFTERBURNER
202 BURN-OFF OVEN
203 COMBUSTIBLE REFUSE
204 CONTINUOUS OPACITY MONITORING SYSTEM (COMS)
205 CREMATION
206 CREMATORY
207 ELECTRIC INDUCTION FURNACE
208 FLUE
209 HOSPITAL WASTE
210 INCINERATION
211 INCINERATOR
212 MEDICAL WASTE
213 METAL SALVAGE OPERATIONS
214 NIGHTTIME COMBUSTION
215 PARTS RECLAMATION UNIT
216 PATHOLOGICAL WASTE
217 PYROLYSIS/COMBUSTION UNIT
218 RESIDENCE TIME

SECTION 300 – STANDARDS

301 CONTROLS REQUIRED
302 EMISSIONS STANDARD – OPACITY
303 EMISSIONS STANDARD – PARTICULATES

304 NIGHTTIME COMBUSTION

305 OPERATION AND MAINTENANCE (O&M) PLAN REQUIREMENTS FOR AIR POLLUTION CONTROL EQUIPMENT AND APPROVED EMISSION CONTROL SYSTEM (ECS)

SECTION 400 – ADMINISTRATIVE REQUIREMENTS (NOT APPLICABLE)

SECTION 500 – MONITORING AND RECORDS

501 RECORDKEEPING

502 OPACITY OBSERVATIONS

503 NIGHTTIME COMBUSTION

504 PREVENTATIVE MAINTENANCE LOG

505 ALTERNATE OPERATING CONDITIONS

506 PERFORMANCE TEST RESULTS

507 COMPLIANCE DETERMINATION – TEST METHODS

508 TEST METHODS INCORPORATED BY REFERENCE

Revised 07/13/88
Revised 04/07/93
Revised 09/22/04
Revised 05/09/12

MARICOPA COUNTY
AIR POLLUTION CONTROL REGULATIONS
REGULATION III – CONTROL OF AIR CONTAMINANTS

RULE 313
INCINERATORS, BURN-OFF OVENS AND CREMATORIES

SECTION 100 – GENERAL

101 **PURPOSE:** To limit particulate emissions from incinerators, burn-off ovens and crematories.

102 **APPLICABILITY:** This rule applies to the following types of equipment and activities:

102.1 All incinerators except those subject to:

a. Resource Conservation and Recovery Act (RCRA) Subtitle C; or

b. Maricopa County Rule 317 (Hospital/Medical/Infectious Waste Incinerators) and Standards of Performance for Hospital/Medical/Infectious Waste Incinerators for Which Construction Is Commenced After June 20, 1996 (40 CFR Part 60, Subpart Ec); or

c. Standards of Performance for Commercial and Industrial Solid Waste Incineration Units for Which Construction Is Commenced After November 30, 1999 or for Which Modification or Reconstruction Is Commenced on or After June 1, 2001(40 CFR Part 60, Subpart CCCC); or

d. Emissions Guidelines and Compliance Times for Commercial and Industrial Solid Waste Incineration Units that Commenced Construction On or Before November 30, 1999 (40 CFR Part 60, Subpart DDDD).

102.2 Burn-off ovens used in metal salvage operations or used to remove nonmetallic coatings from metal parts by the application of heat and meet one of the following conditions:

a. Charge combustion capacity of greater than 25 lbs per hour; or

b. Internal oven volume greater than one (1) cubic yard; or

c. Fuel burning capacity of primary chamber greater than 200,000 Btu per hour.

102.3 Crematories.

103 **EXEMPTIONS:** The following types of equipment and activities are exempt from this rule:

103.1 Laboratory ovens;

103.2 Environmental test chambers;

103.3 Ovens used in research facilities;

103.4 Flares;

103.5 Curing or drying ovens that are operated at temperatures lower than 600 °F;

103.6 Electric induction furnaces; and

103.7 Burning-off of pre-cleaned items consisting entirely of metal and containing no debris visible to the naked eye. Pre-cleaning shall be done by flushing with water, solvent and/or mechanical means.

SECTION 200 – DEFINITIONS: For the purpose of this rule, the following definitions shall apply, in addition to those definitions found in Rule 100 (General Provisions and Definition) of these rules. In the event of any inconsistency between any of the Maricopa County air pollution control rules, the definitions in this rule take precedence.

201 **AFTERBURNER** – A heating device associated with an incinerator, burn-off oven or crematory that is designed to provide excess air and heat for complete combustion of the gases in the primary chamber so as to control particulate emissions.

202 **BURN-OFF OVEN** – A heating device intended to remove materials such as oils, greases, paints, coatings, rubber, lacquers, and insulation from other materials or parts by combustion or charring.

203 **COMBUSTIBLE REFUSE** – Any solid or liquid combustible waste material containing carbon in a free or combined state.

204 **CONTINUOUS OPACITY MONITORING SYSTEM (COMS)** – The total equipment necessary for the determination of opacity of emissions which provides a permanent, uninterrupted record of opacity readings.

205 **CREMATION** – The process of reducing human or animal remains to bone fragments and ashes in a controlled retort or furnace using heat and/or flame. The reduction takes place through heat and evaporation. Cremation shall also include the processing and pulverization of the bone fragments.

206 **CREMATORY** – A retort used for the cremation of remains (human or animal), body parts, and associated wrappings. This term may also be used to refer to an establishment wherein these remains are cremated. A crematory may be considered existing or new, dependent upon the date it was constructed. If it was constructed, modified, or commenced operation, including the contractual obligation to undertake and complete an order for a crematory, prior to September 22, 2004, then it is an existing crematory.

207 **ELECTRIC INDUCTION FURNACE –** A furnace or oven that is used to melt metals by use of electricity as the source of power or an alternating current electric furnace in which primary conductor is coiled and generates by electromagnetic induction a secondary current that develops within the metal charge.

208 **FLUE –** A duct or passage, such as a stack or chimney, for air contaminants.

209 **HOSPITAL WASTE –** Discards generated at a hospital or clinic, except unused items returned to the manufacturer. The definition of hospital waste does not include human corpses, remains, and anatomical parts that are intended for interment or cremation.

210 **INCINERATION –** The process of combustion or pyrolysis involving the chemical reaction of combustible waste materials with air in which the primary purpose is the destruction and reduction in size and mass of the combustible material.

211 **INCINERATOR –** Any equipment used for the purpose of reducing the volume and mass by removing combustible matter by direct combustion or the combustion of waste gases from pyrolysis or gasification. Incinerator designs include single chamber and two-chamber. A two-chamber incinerator consists of two or more refractory lined combustion chambers in series, physically separated by refractory walls, interconnected by gas passage ports or ducts designed for maximum combustion of the material to be burned. An "incinerator" does not include devices such as open or screened barrels, drums, or process boilers.

211.1 **Primary Chamber –** The initial compartment of an incinerator wherein the majority of waste volume reduction or heat treatment occurs by combustion. Primary chambers are normally operated at lower temperatures than are secondary chambers or afterburners.

211.2 **Secondary Chamber –** The compartment of an incinerator that operates at excess air conditions wherein destruction of gas-phase combustion products occurs. Passage ports, ducts, flues, chimneys, or stacks with burners shall not be considered controlled secondary chambers unless (1) the combustion zone exhibits design measures for the retention of the gas stream in the chamber, turbulence or mixing, and (2) there is an availability of excess air as determined by engineering analysis.

212 **MEDICAL WASTE –** Any non-gaseous waste, including infectious wastes, which is generated in the diagnosis, treatment, or immunization of human beings or animals, in research pertaining thereto, or in production or testing of biological agents and substances. Medical waste does not include any wastes identified under subtitle C of the Resource Conservation and Recovery Act (RCRA) as hazardous or as household waste, but includes those pharmaceuticals which are not identified as hazardous by subtitle C of RCRA. Medical waste does not include human or animal remains, caskets, containers, clothing or wrappings from crematories. An expanded definition of medical waste is found in 40 CFR 60, Subpart Ec. The definition of "medical waste" includes, but is not limited to:

212.1 Cultures and stocks of infectious agents and human pathological waste;

212.2 Human blood and blood products, ;

212.3 Sharps, needles and broken glass that were in contact with infectious wastes;

212.4 Animal wastes exposed to infectious wastes,;

212.5 Isolation wastes; and

212.6 Unused sharps, needles and syringes.

213 **METAL SALVAGE OPERATIONS –** Any source operation in which combustion or pyrolysis is carried on for the principal purpose, or with the principal result, of recovering metals which are introduced into the operation as essentially pure metals, or alloys thereof, by oxidation of physically intermingled combustible material. Operations, in which there is a complete fusion of all such metals such as in an electric induction furnace, are not considered "metal salvage operations" for the purpose of this rule.

214 **NIGHTTIME COMBUSTION –** Combustion that occurs after sundown and before the following sunrise.

215 **PARTS RECLAMATION UNIT –** A burn-off oven that combusts only paints, lacquers, and varnishes off of items (e.g., tools and equipment) so that these items can be reconditioned and reused. A burn-off oven used to remove plastic, insulation or rubber from items shall not be considered a parts reclamation unit for the purpose of this rule.

216 **PATHOLOGICAL WASTE –** Waste material that consists of only human or animal remains, anatomical parts and/or tissue, the bags/containers used to collect and transport the waste material, and animal bedding (if applicable).

217 **PYROLYSIS/COMBUSTION UNIT –** A combustion unit that produces gases, liquids, or solids through the heating of waste, and the gases, liquids, or solids produced are combusted and emissions vented to the atmosphere.

218 **RESIDENCE TIME –** The average time that gases spend in a defined space, also known as "bulk gas average residence time".

SECTION 300 – STANDARDS

301 **CONTROLS REQUIRED**: An owner or operator shall comply with the following:

301.1 **Incinerators:** Combustion of all types of combustible refuse in an incinerator shall be performed in a multiple-chamber incinerator that operates at least at a minimum temperature of 1600 °F in the secondary chamber or afterburner, with a residence time of at least one (1) second in the secondary chamber or afterburner during the period of combustion in order to destroy the combustion products.

301.2 **Burn-Off Ovens:** Metal salvage operations or removal of materials utilizing a burn-off oven shall employ an oven with at least two chambers. The secondary compartment or afterburner shall operate at a minimum temperature of at least 1400 °F with a residence time of at least one-half (½) second during the period of combustion in order to destruct the combustion products.

301.3 Crematories: A crematory shall consist of an incinerator comprised of at least two chambers and that complies with the following conditions:

a. For an existing crematory the burner in the primary chamber shall not be ignited until the secondary chamber combustion zone temperature is equal to or greater than 800 °F. The secondary compartment or afterburner shall operate at a minimum temperature of at least 1400 °F with a residence time of at least one (1) second during the period of combustion in order to destruct the combustion products.

b. For a new crematory, the burner in the primary chamber shall not be ignited until the secondary chamber combustion zone temperature is equal to or greater than 1000°F. The secondary compartment or afterburner shall operate at a minimum temperature of at least 1600 °F with a residence time of at least one (1) second during the period of combustion in order to destruct the combustion products.

c. Alternate Operating Conditions: If the manufacturer's optimum design specifications for the minimum temperature or residence time of a secondary chamber or afterburner at existing crematories are different from the temperatures or residence times set forth in Section 301.3 (a) of this rule, the manufacturer's specifications may be used instead, providing that the owner or operator demonstrates compliance with the test methods listed in Section 507 of this rule.

d. Additional Operating Conditions for Cremating Large Bodies: Alternate operating temperatures and special procedures may be required for cremation of large bodies (over 300 lbs.) that are different from the temperatures or residence times in the afterburner set forth in Section 301.3 of this rule. These alternate times and temperatures may be followed when cremating large bodies, provided that the owner or operator demonstrates compliance with the test methods listed in Section 507 of this rule.

302 EMISSIONS STANDARD – OPACITY: An owner or operator shall not cause, allow or permit emissions into the atmosphere from any incinerator, burn-off oven, or crematory, for an aggregate of more than 30 seconds in any 60 minutes, for any air contaminant that exceeds 20 percent opacity (Section 507.3 of this rule).

303 EMISSIONS STANDARD – PARTICULATES: An owner or operator shall not cause, allow, or permit particulate matter emissions into the atmosphere from any incinerator, burn-off oven, or crematory, which exceed 0.080 grain per cubic foot of dry flue gas at standard conditions adjusted to 7% oxygen (O_2) in the exhaust gases and calculated as if no auxiliary fuel had been used.

304 NIGHTTIME COMBUSTION: An owner or operator who chooses to conduct combustion operations shall comply with the following conditions:

304.1 Incinerator, Crematory, or Burn-Off Oven Other than a Parts Reclamation Unit: A Continuous Opacity Monitoring System (COMS) shall be operated at all times during nighttime combustion operations and shall comply with the following conditions:

a. The COMS shall be calibrated and maintained in accordance with EPA Performance Specification # 1, described in Section 507.2 of this rule and shall be calibrated at least once per day. The COMS shall be located downstream from all particulate control equipment, where condensed water is not present, free of interference from ambient light (applicable only if transmissometer is responsive to ambient light) and accessible in order to permit routine maintenance in accordance with the test method described in Section 507.2 of this rule.

b. A properly trained COMS operator shall be present at all times during nighttime combustion operations. The operator shall be trained in the proper operation and maintenance of the COMS as well as the shutdown procedures of the incinerator, burn-off oven, or crematory. Therefore if the COMS registers opacity readings that are higher than the opacity limitations in Section 302 of this rule, then the operator has the authority and capability to shut down the operation.

304.2 **Parts Reclamation Unit:** An owner or operator of a parts reclamation unit who chooses to conduct nighttime combustion operations without the installation and operation of a COMS shall:

a. Not cause, allow or permit any visible emissions during combustion during the nighttime; and

b. Conduct visible emissions observations in compliance with the test method described in Section 507.4 of this rule at least once per hour during each nighttime combustion cycle; and

c. Operate and maintain the parts reclamation unit in accordance with the manufacturer's operations and maintenance manual or other similar written materials supplied by the manufacturer or distributor of the unit to ensure the unit remains in proper operating condition.

d. Operate exclusively with parts reclamation units with an inside stack diameter less than 10 inches.

305 **OPERATION AND MAINTENANCE (O&M) PLAN REQUIREMENTS FOR AIR POLLUTION CONTROL EQUIPMENT AND APPROVED EMISSION CONTROL SYSTEM (ECS):** An owner or operator subject to this rule operating an ECS shall provide, properly install and maintain in calibration, in good working order and in operation the air pollution control equipment required by this rule. This includes the following:

305.1 Provide and maintain devices that indicate temperatures, pressures, rates of flow, or other operating conditions necessary to determine if the air pollution control equipment is functioning properly and is properly maintained.

305.2 Keep records according to Section 501 of this rule that demonstrate the air pollution control equipment meets the control standards required in Section 300 of this rule.

305.3 Submit an Operation and Maintenance (O&M) Plan if the air pollution control equipment consists of additional equipment other than an afterburner, such as a baghouse or

venturi scrubber according to the following O&M Plan requirements for an Emission Control System (ECS):

a. An owner or operator subject to this rule shall provide and maintain readily available on-site at all times the O&M Plan(s) for any ECS and any ECS monitoring devices that are used under this rule or an air pollution control permit.

b. An owner or operator subject to this rule shall submit to the Control Officer for review the O&M Plan(s) for any ECS including an ECS monitoring device that is required by this rule or required under an air pollution control permit.

c. An owner or operator subject to this rule operating an ECS shall install, maintain and accurately calibrate monitoring devices listed in the O&M Plan(s) including, but not limited to, monitoring devices that measure pressure differentials and other operating conditions necessary to determine if control devices are functioning properly.

d. An owner or operator who is required to have O&M Plan(s) for any ECS including any ECS monitoring devices must fully comply with all elements of the O&M Plan(s) including, but not limited to, every action, schedule, and condition identified in each O&M Plan.

e. An O&M Plan for any ECS including any ECS monitoring devices shall include all of the following information:

(1) ECS equipment manufacturer;

(2) ECS equipment model;

(3) ECS equipment identification number or identifier that owner or operator subject to this rule assigns to such ECS equipment when the manufacturer's equipment identification number is unknown; and

(4) Any other information required by Section 501 of this rule.

f. The owner or operator subject to this rule, who receives a written notice from the Control Officer that an O&M Plan for any ECS including any ECS monitoring devices is deficient or inadequate, must make written revisions to the O&M Plan. The revised O&M Plan must be submitted to the Control Officer within five working days of receipt of the Control Officer's written notice, Such time period can be extended by the Control Officer, upon written request and for good cause. During the time that such owner or operator subject to this rule is preparing revisions to the O&M Plan, such owner or operator shall still comply with all requirement of this rule.

SECTION 400 – ADMINISTRATIVE REQUIREMENTS (NOT APPLICABLE)

SECTION 500 – MONITORING AND RECORDS

501 **RECORDKEEPING**: An owner or operator subject to this rule shall maintain the records listed below and shall retain these records for five years. These records shall be kept on-site in written or electronic format, in a complete and consistent manner. Written or electronic copies shall be made available to the Control Officer upon request. An owner or operator shall keep the following daily records:

501.1 Times of operation;

501.2 **Chamber temperatures:** Chamber temperatures shall include operating temperatures for the secondary chamber as well as secondary chamber temperature at the time of the ignition of the primary chamber.

501.3 Weight of the materials incinerated shall be determined as follows:

a. **Incinerators:** Total weight charged.

b. **Crematories:**

(1) **Human Crematories:** Account for the numbers of bodies cremated; or

(2) **Animal Crematories:** Account for either the number and type of remains charged or the weight of the animal(s) charged; or

(3) **Large Bodies:** If a human or animal crematory combusts a large body (over 300 lbs.), the approximate weight of the body and any alternative operating conditions shall be recorded.

502 **OPACITY OBSERVATIONS**: An owner or operator shall keep records of opacity observations used to measure visible emissions from activities regulated by this rule. The records shall be compiled, maintained, and retained for each day or night that any activity capable of generating emissions is conducted. These written records shall include the following information:

502.1 Date, time, and location of all opacity observations; and

502.2 Results of all opacity observations; and

502.3 Corrective action(s) taken, if any.

503 **NIGHTTIME COMBUSTION**: An owner or operator conducting nighttime combustion operations shall comply with the following requirements:

503.1 **Nighttime Combustion With a COMS:**

a. Maintain a continuous record of opacity readings generated by the COMS. Records shall include all times that the meter is running properly. Records shall also indicate when the instrument is inoperative or has been adjusted or repaired.

b. Record the date and time identifying each period during which the COMS was inoperative, except for zero and span checks, and the nature of system repair or

adjustment shall be reported. The Control Officer may request proof of COMS performance whenever system repairs or adjustments, other than routine maintenance, have been made.

c. Maintain a file of all data collected by the COMS and as necessary to convert monitoring data to the units of the applicable standard as described for compliance with Section 507.3 of this rule.

503.2 Nighttime Combustion Without a COMS – Parts Reclamation Unit: Maintain records of the visible emissions observations taken at night during each combustion cycle for each parts reclamation unit as required by Section 507.4 of this rule. These records shall include the following:

a. Date, time, and location of all visible emission observations; and

b. Results of all visible emission observations; and

c. Corrective action(s) taken, if any.

504 PREVENTATIVE MAINTENANCE LOG: Maintain a log of equipment preventive maintenance activities performed on all equipment or ECS subject to this rule.

505 ALTERNATE OPERATING CONDITIONS: An owner or operator shall keep records of any alternate operating conditions including temperatures and residence times, as required by Sections 301.3(c) and 301.3(d) of this rule.

506 PERFORMANCE TEST RESULTS: An owner or operator shall maintain records of all exhaust stack performance tests. Such written records shall include the following information:

506.1 Date, start and end times, and location of all performance tests;

506.2 Results of all tests; and

506.3 Corrective action(s) taken, if necessary.

507 COMPLIANCE DETERMINATION – TEST METHODS: When more than one test method is permitted for determining an exceedance of the limits established in this rule, then any exceedance determined using any one of the following applicable test methods shall constitute a violation of this rule.

507.1 Determination of total particulate matter, EPA Methods 1 through 5, or the EPA equivalent methods listed in Sections 507.3 and 507.4 of this rule approved by the Control Officer, shall be used. Both carbon dioxide and oxygen measurements shall be obtained simultaneously with each Method 5 run.

507.2 Determination of visible emissions compliance shall be made by a certified emissions observer or by a continuous emission monitor which is maintained and calibrated in accordance with EPA Performance Specification #1 (40 CFR, Part 60, Appendix B). The observer shall be qualified as an expert visible emissions evaluator and so certified

by the Arizona Department of Environmental Quality or by any other agency that is acceptable to the Control Officer.

507.3 Opacity shall be determined by observations of visible emissions conducted in accordance with EPA Reference Method 9 as modified by EPA Reference Method 203 B.

507.4 The presence or absence of visible emissions shall be detected using EPA Reference Method 22.

508 **TEST METHODS INCORPORATED BY REFERENCE:** The EPA test methods as they exist in the Code of Federal Regulations (CFR) are incorporated by reference in Appendix G of the Maricopa County Air Pollution Control Rules and Regulations.

REGULATION III - CONTROL OF AIR CONTAMINANTS

RULE 314
OPEN OUTDOOR FIRES AND INDOOR FIREPLACES AT COMMERCIAL AND INSTITUTIONAL ESTABLISHMENTS

INDEX

SECTION 100 - GENERAL

101 PURPOSE

102 APPLICABILITY

SECTION 200 - DEFINITIONS

201 AIR CURTAIN DESTRUCTOR

202 AREA A

203 DANGEROUS MATERIAL

204 DITCHBANK

205 EMISSION REDUCTION TECHNIQUES (ERTs)

206 FENCE ROW

207 FIREBOX

208 FLUE

209 OPEN OUTDOOR FIRE OR OPEN BURNING

210 ORCHARD HEATERS

211 PROHIBITED MATERIALS

212 PUBLIC OFFICER

213 RESTRICTED-BURN PERIOD

214 WOOD-BURNING CHIMINEAS

SECTION 300 - STANDARDS

301 PROHIBITION - OPEN OUTDOOR FIRES

302 OPEN OUTDOOR FIRES REQUIRED TO OBTAIN A BURN PERMIT

303 OPEN OUTDOOR FIRES NOT REQUIRED TO OBTAIN A BURN PERMIT

304 OPEN OUTDOOR FIRES IN AN AIR CURTAIN DESTRUCTOR

305 ADDITIONAL REQUIREMENTS FOR OPEN OUTDOOR FIRES ALLOWED PER SECTIONS 302, 303 AND 304

306 PROHIBITION - BURNING IN INDOOR FIREPLACES

SECTION 400 - ADMINISTRATIVE REQUIREMENTS FOR BURN PERMITS AND BURN PLANS

401 FEES REQUIRED

402 BURN PERMIT APPLICATION

403 BURN PERMIT CONDITIONS

404 BURN PERMIT DENIAL

405 BURN PERMIT TERMS

406 BURN PLAN APPLICATION AND CONDITIONS

SECTION 500 - MONITORING AND RECORDS

501 RECORDKEEPING AND REPORTING

502 RECORDS RETENTION

503 PROGRAM REVIEW

APPENDIX TO RULE 314

AIR CURTAIN DESTRUCTOR AND FIREBOX PROCEDURES

Revised 07/13/88
Revised 12/19/01
Revised 04/20/05
Revised 03/12/08
Revised 07/25/12

MARICOPA COUNTY
AIR POLLUTION CONTROL REGULATIONS
REGULATION III - CONTROL OF AIR CONTAMINANTS

RULE 314
OPEN OUTDOOR FIRES AND INDOOR FIREPLACES AT COMMERCIAL AND INSTITUTIONAL ESTABLISHMENTS

SECTION 100 - GENERAL

101 **PURPOSE:** To limit the emissions of air contaminants produced from open burning and from indoor fireplaces at commercial and institutional establishments.

102 **APPLICABILITY:** Rule 314 is applicable to any open outdoor fire and burning in indoor fireplaces at commercial and institutional establishments that is conducted within Maricopa County.

SECTION 200 - DEFINITIONS: For the purpose of this rule, the following definitions shall apply in addition to those definitions found in Rule 100 (General Provisions and Definitions) of these rules. In the event of any inconsistency between any of the Maricopa County air pollution control rules, the definitions in this rule take precedence.

201 **AIR CURTAIN DESTRUCTOR-**A device designed to form a curtain of air over a firebox in which burning occurs that aids in more complete combustion through increases in turbulence and combustion time. Above ground air curtain destructors are the only type of air curtain destructor allowed in Maricopa County.

202 **AREA A -** As defined in Arizona Revised Statutes (A.R.S.) § 49-541(1), the area in Maricopa County delineated as follows:

Township 8 North, Range 2 East and Range 3 East
Township 7 North, Range 2 West through Range 5 East
Township 6 North, Range 5 West through Range 6 East
Township 5 North, Range 5 West through Range 7 East
Township 4 North, Range 5 West through Range 8 East
Township 3 North, Range 5 West through Range 8 East
Township 2 North, Range 5 West through Range 8 East
Township 1 North, Range 5 West through Range 7 East
Township 1 South, Range 5 West through Range 7 East
Township 2 South, Range 5 West through Range 7 East
Township 3 South, Range 5 West through Range 1 East
Township 4 South, Range 5 West through Range 1 East

203 **DANGEROUS MATERIAL-**Any substance or combination of substances that is capable of causing bodily harm or property loss unless neutralized, consumed, or otherwise disposed of in a controlled and safe manner.

204 **DITCHBANK-**A lateral area not to exceed two and one half feet on either side of a ditch.

205 **EMISSION REDUCTION TECHNIQUES (ERTs) -** Methods for controlling emissions from outdoor fires to minimize the amount of emissions output per unit of area burned. Types of ERTs include minimizing the material to be burned, preventing fire from spreading by lining the area and applying fire retardant foam or water, allowing the material to dry before burning, extinguishing the smoldering burns, burning in piles, and burning in the opposite direction of the wind.

206 **FENCE ROW -** A lateral area not to exceed two and one half feet on either side of the centerline of a fence.

207 **FIREBOX -** The chamber or compartment inside of an air curtain destructor wherein materials are burned.

208 **FLUE -** Any duct or passage for air or combustion gases, such as a stack or chimney.

209 **OPEN OUTDOOR FIRE OR OPEN BURNING -** Any combustion of any type of material outdoors, where the products of combustion are not directed through a flue. Open outdoor fires include agricultural, residential and prescribed burning. Purposes for fires can include prevention of a fire hazard, instruction in the methods of fighting fires, watershed rehabilitation, disease and pest prevention.

210 **ORCHARD HEATERS -** A device which helps prevent frost damage to fruit trees by heating. An orchard heater consists of a pipeline heater system operated from a central control from which fuel is distributed by a piping system from a centrally located tank.

211 **PROHIBITED MATERIALS -** Non-paper garbage from the processing, storage, service or consumption of food; books, magazines, fiberboard, packaging, rags, fabrics, office records, chemically treated or soaked wood; lead-painted wood; linoleum flooring, and composite counter tops; tires; animal wastes and carcasses, coal, liquid or gelatinous hydrocarbons tar, explosives or ammunition; oleanders, leaves, grass clippings, refuse; asphalt shingles or asphalt; tar paper; plastic and rubber products, including bottles for household chemicals; plastic grocery and retail bags; waste petroleum products, such as waste crankcase oil, transmission oil, and oil filters; transformer oils; asbestos; batteries; anti-freeze; aerosol spray cans; electrical wire insulation; thermal insulation; polyester products; hazardous waste products such as paints, pesticides, cleaners and solvents, stains and varnishes, and other flammable liquids; plastic pesticide bags

and containers; and hazardous material containers including those that contained lead, cadmium, mercury and arsenic compounds.

212 **PUBLIC OFFICER -** Any elected or appointed officer of a public agency established by charter, ordinance, resolution, state constitution or statute, but excluding members of the legislature.

213 **RESTRICTED-BURN PERIOD -** A condition declared by the Control Officer whenever meteorological conditions are conducive to an accumulation of carbon monoxide (CO), ozone, and/or particulate matter in exceedance of the standards or when air quality reaches other limits established by the Control Officer or when there is increased fire danger.

214 **WOOD-BURNING CHIMINEAS -** Chimineas are burning devices made from clay, aluminum, and steel and are used for warmth and aesthetics outside in yards and patios. Chimineas are designed to burn solid fuels.

SECTION 300 - STANDARDS

301 **PROHIBITION - OPEN OUTDOOR FIRES:** It shall be unlawful for any person to ignite, cause or permit to be ignited, allow, maintain any open outdoor fire within the limits of Maricopa County, except as provided in Sections 302, 303, 304, 305 and in the Appendix of this rule.

302 **OPEN OUTDOOR FIRES REQUIRED TO OBTAIN A BURN PERMIT:** The types of fires described in Sections 302.1 and 302.2 of this rule require a burn permit that is obtained from the Control Officer prior to initiating the burn. Even after the Control Officer issues the burn permit, the person conducting the fire shall call both the fire department and the Control Officer to obtain permission to burn for each day. The Control Officer shall base his decision to approve or deny permission to burn on National Weather Service forecasts or other meteorological analyses that are indicative of a Restricted-Burn Period. See Section 402 of this rule for additional requirements regarding burn permits.

302.1 Fires Prohibited During Restricted-Burn Periods in Maricopa County, but Allowed From May 1 through September 30 Each Year in Area A:

a. Open outdoor fires that are declared necessary by the County Agricultural Agent, when such fires have been determined as essential for the purposes of disease and/or pest prevention and certified by actual investigations by the County Agricultural Agent.

b. Open outdoor fires for the control of weeds for the prevention of fire hazards, when such fires are declared necessary by a public officer in the performance of his official duties.

c. Open outdoor fires for fire fighting training and fire fighting training areas and structures. See Section 303.2 (b) of this rule for an exemption to this requirement.

d. Open outdoor fires for the burning of agricultural ditchbanks and fence rows where other reasonable mechanical, chemical, or other methods of removal are not available. In addition:

(1) A high-temperature mechanical burner must be used to burn ditchbanks, canal laterals, and/or fence rows.

(2) Burning ditchbanks and/or fence rows is not allowed during a restricted-burn period from October 1 through February 29, unless such fires are required in the performance of an official duty of any public office, or such fires are necessary to thwart or prevent a hazard that cannot be properly managed by any other means, or are necessary for the protection of public health.

(3) An on-site inspection by the Control Officer must be conducted to verify that only vegetative materials will be burned.

(4) After an initial on-site inspection by the Control Officer has been completed, a Burn Permit may be issued for the same location(s) without having to conduct additional initial on-site inspections. However, periodic unscheduled, on-site inspections may be conducted by the Control Officer on days when such burning has been authorized by the Burn Permit.

e. Open outdoor fires declared necessary by the federal government or any of its departments, agencies, or agents, or the state or any of its agencies, departments, or subdivisions for the purpose of watershed rehabilitation or control through vegetative manipulation.

302.2 Fires Prohibited During Restricted-Burn Periods in Maricopa County and Also Prohibited from May 1 to September 30 Each Year in Area A:

a. Open outdoor fires for the destruction of tumbleweeds for the prevention of fire hazards in cases where other reasonable methods are not available.

(1) Tumbleweeds must be cut, piled, and dried before burning.

(2) A high temperature mechanical burner may be used to burn undried tumbleweeds in situations where it is not feasible to allow natural drying.

(3) A high temperature mechanical burner must be used to burn tumbleweeds growing along canal laterals and fence rows.

b. Open outdoor fires for the burning of indigenous scrub vegetation cleared for the purpose of agricultural operations in non-urban areas of low population where other reasonable methods are not available.

(1) The Control Officer shall issue such Burn Permit only once per geographical location.

(2) An on-site inspection must be conducted to determine removal of all other materials (e.g. wood, rubber, tires, dirt and metal) before the issuance of the Burn Permit.

303 OPEN OUTDOOR FIRES NOT REQUIRED TO OBTAIN A BURN PERMIT: The person conducting any type of fire listed in Section 303 of this rule does not need to obtain a burn permit. However, the person conducting the fire may be required to contact the Control Officer for permission to burn prior to igniting the fire when specified below in Subsections 303.1 through 303.4.

303.1 Fires Allowed at Any Time of the Year in Maricopa County or Area A:

a. Cooking for immediate human consumption.

b. Orchard heaters for frost protection in farming or nursery operations.

c. Proper disposal of flags under 4 U.S.C. § 8.

d. The display of fireworks for recreational purposes or pyrotechnics for musical or cinematic/theatrical functions.

303.2 Fires Prohibited During Restricted-Burn Periods in Maricopa County: The person conducting any type of fire listed in Section 303.2 of this rule shall first call the County Air Quality Updates Hotline to hear the recorded message or check local government web sites to determine whether a Restricted-Burn Period has been declared each day. If that is the case, then open outdoor burning is prohibited.

a. Fire extinguisher training. This exemption from needing a burn permit applies only when the training is limited to using a small amount of flammable liquid and a small container (i.e. a wastepaper basket or a flat pan).

b. Fire fighting training, training areas and training structures are exempt from needing a permit if the sole source of flame is a burner fueled by either liquefied petroleum gas or natural gas, with a British Thermal Unit (BTU) input per hour rating of less than 2,000,000 BTUs.

c. Disposal of dangerous material must be conducted in compliance with the Arizona Department of Environmental Quality's (ADEQ's) regulations.

303.3 Fires Prohibited During Restricted-Burn Periods in Maricopa County and Also Prohibited from May 1 Through September 30 Each Year in Area A: The person conducting any type of fire listed in Section 303.3 of this rule shall first call the County Air Quality Updates Hotline to hear the recorded message or check local government web sites to determine whether a restricted-burn period has been declared. If that is the case, then open outdoor burning is prohibited.

a. Warmth for human beings.

b. Recreational purposes.

c. Wood-burning chimineas and outdoor pits.

d. Branding of animals.

303.4 Fires for testing of potentially explosive-containing products during restricted-burn periods: The person conducting any type of fire listed in Section 303.4 of this rule shall keep and submit records as specified in Section 501 of this rule and call the County Air Quality Updates Hotline prior to burning to hear the recorded message or check local government web sites to determine whether a restricted-burn period has been declared. If a restricted-burn period has been declared, the person conducting the fire is required to contact the Control Officer for permission to burn prior to igniting the fire. Particulate emissions from the fires for testing of potentially explosive-containing products must not exceed two pounds per day for this permission to burn to be granted. The amount of particulate emissions are to be calculated using emission factors referenced in AP-42 or using other means of quantification that have been approved by the Control Officer and the Administrator.

a. Testing of potentially explosive-containing, flammable, or combustible products (e.g., automotive airbags, rocket motors, gas generators, and vehicular assemblies) in accordance with Department of Transportation (DOT) or Department of Defense guidelines. This exemption from needing a burn permit refers to testing of hazard classification, packaging performance, propagation, and/or mass fire, but only when the testing area is controlled, is relatively small, and when the testing is not considered to be nor is associated with the disposal of dangerous material.

b. Testing of potentially explosive-containing products for commercial, military, or law enforcement use. This exemption from the requirement to obtain a burn permit applies only when the testing area is controlled, is relatively small, and when the testing is not considered to be nor is associated with the disposal of dangerous material.

304 OPEN OUTDOOR FIRES IN AN AIR CURTAIN DESTRUCTOR: Prior to conducting an open outdoor fire in an air curtain destructor shall obtain a Title V permit from ADEQ and a site-specific Burn Plan approved by the Control Officer. See the Appendix to Rule 314 for further requirements for the use of air curtain destructors. See Section 406 of this rule for Burn Plan Applications and Conditions.

305 ADDITIONAL REQUIREMENTS FOR OPEN OUTDOOR FIRES ALLOWED PER SECTIONS 302, 303, AND 304:

305.1 Prohibited materials cannot be burned in open outdoor fires except as provided in Sections 303.2 and 303.4.

305.2 Open outdoor fires cannot be conducted before the hour of 10 a.m. and after 5 p.m. from October 1 to March 31 and before the hour of 6 a.m. and after 6 p.m. from April 1 to September 30 except as provided in Sections 302.1(c), 303.2(b), and 303.3.

305.3 Open outdoor fires cannot be conducted during any weekends or holidays except as provided in Sections 302.1(c), 303.1, 303.2(b), and 303.3.

305.4 Fire extinguishing equipment shall be available at all times during open outdoor fires.

305.5 An attendant shall be present at all times during open outdoor fires for the duration of the burn.

305.6 Open outdoor fires shall never be initiated with items that cause the production of black smoke.

305.7 An air curtain destructor must be used for the burning of certain vegetative materials greater than 6 inches in diameter and an on-site inspection must be conducted before burning.

306 **PROHIBITION - BURNING IN INDOOR FIREPLACES:** Burning in indoor fireplaces that use any fuels other than gaseous fuels, including gas logs, at commercial and institutional establishments is prohibited during Restricted-Burn Periods in Maricopa County. The owner or operator of a commercial or institutional fireplace shall first call the County Air Quality Updates Hotline to hear the recorded message or check local government web sites to determine whether a Restricted-Burn Period has been declared. If that is the case, then burning is prohibited except if using gaseous fuels.

SECTION 400 - ADMINISTRATIVE REQUIREMENTS FOR BURN PERMITS AND BURN PLANS

401 **FEES REQUIRED:** A fee shall be charged for a Burn Permit or the approval of each site specific Air Curtain Destructor Burn Plan as set forth in Rule 280 (Fees) of these rules.

402 **BURN PERMIT APPLICATION:** A person shall file with the Control Officer, on a form prescribed by the Control Officer, a Burn Permit application and the complete application fee as described in Rule 280 (Fees) of these rules. The Control Officer shall act on a Burn Permit application and shall notify the applicant within 14 calendar days of the filing of the completed application.

402.1 A separate Burn Permit application is required for each burn site location not contiguous to the location on the original Burn Permit application.

402.2 The Control Officer shall conduct an on-site inspection before issuing the Burn Permit.

402.3 The issuance of a Burn Permit does not relieve the permittee from any of the requirements of a fire department having jurisdiction, including but not limited to having the Burn Permit validated by such fire department.

402.4 Permission given by a Public Officer for setting any fire given by a public officer in the performance of official duty under Sections 300 through 304 of this rule shall be given in writing and a copy of the written permission shall be transmitted immediately to the Control Officer. The setting of any such fire shall be conducted in a manner and at such times as approved by the Control Officer, unless doing so would defeat the purpose of this exemption.

402.5 If a person has obtained a Title V Permit, a Non-Title V Permit, or a General Permit under Regulation II (Permits and Fees) of these rules that includes condition(s) regarding open outdoor fires, then such person shall not be required to obtain a separate Burn Permit from the Control Officer. An owner or operator of an air curtain destructor that has obtained a Title V permit from the ADEQ shall submit a burn plan for each burn site location to the Control Officer as described in the Appendix to Rule 314.

403 **BURN PERMIT CONDITIONS:** The Control Officer may impose any permit conditions that are necessary to ensure compliance with Federal laws, State laws, or these rules. Burn Permit condition(s) may include, but are not limited to, burning hours, notification of intent to burn, and Burn Permit posting.

404 **BURN PERMIT DENIAL:** The Control Officer shall deny a Burn Permit application if the material or operations do not meet the criteria described in this rule.

405 **BURN PERMIT TERMS:** A Burn Permit shall be issued for the following terms:

405.1 Disease/Pest Prevention: 30 days from date of issuance

405.2 Fire Hazard: 30 days from date of issuance

405.3 Tumbleweeds: 30 days from date of issuance

405.4 Ditchbank/Fence Row: 1 year from date of issuance

405.5 Fire Fighting Training/Structures: 1 year from date of issuance

406 **BURN PLAN APPLICATION AND CONDITIONS:** In order to use an air curtain destructor, a person shall file with the Control Officer, on a form prescribed by the Control Officer, a Burn Plan application and the complete application fee as described in Rule 280 (Fees) of these rules. The Control Officer shall act on a Burn Plan application and shall notify the applicant within 14 calendar days of the filing of the completed application.

406.1 A separate, site-specific Burn Plan application is required for each burn site location not contiguous to the location.

406.2 A Burn Plan Application shall be site-specific and shall list the following, at a minimum:

a. Notification of intent to burn;

b. The anticipated dates and hours of the burn;

c. The type and quantity of fuel that will be used;

d. The type of material burned;

e. The legal location, to the nearest township, range and section or latitude and longitude, to the nearest degree minute, street address, or parcel number;

f. The Burn Plan posting; and

g. The listing of the air curtain destructor's requirements as outlined in Section A of the Appendix to this rule.

406.3 The Control Officer shall conduct an on-site inspection before approving the Burn Plan Application.

406.4 The issuance of a Burn Plan does not relieve the permittee from any of the requirements of a fire department having jurisdiction, including but not limited to having the Burn Plan validated by such fire department.

406.5 The Control Officer may impose any conditions that are necessary to ensure compliance with Federal laws, State laws, or these rules.

406.6 The Control Officer shall deny a Burn Plan application if the material or operations do not meet the criteria described in this rule.

SECTION 500 - MONITORING AND RECORDS

501 RECORDKEEPING AND REPORTING:

501.1 The following information shall be provided to the Control Officer for each time that open burning occurs for persons and operations subject to Sections 302, 303.2(c), or 304. This information shall be provided on a daily basis either by writing, fax, or electronically and shall include:

a. The date of the burn; and

b. The type and quantity of fuel burned for each date open outdoor burning occurs; and

c. The fire type such as a pile or windrow for each date that open outdoor burning occurs; and

d. The legal location, to the nearest township, range and section, or latitude and longitude, to the nearest degree minute, street address, or parcel number.

501.2 For persons and operations subject to Sections 303.4 the following information shall be provided to the Control Officer for each day that such

testing is conducted. This information shall be provided on a daily basis either by writing, fax, or electronically and shall include:

a. The date of the testing;

b. The time of day of testing;

c. The legal location of such testing, to the nearest township, range and section, or latitude and longitude, to the nearest degree minute, street address, or parcel number;

d. The unit designation (if applicable) (e.g. part number and test item description);

e. The quantity of units tested;

f. The type and quantity of material burned;

g. The total charge weight per unit tested;

h. The total weight of airborne particulate matter and gaseous pollutant effluents produced per test unit;

i. The test procedure used;

j. The duration of burn of each test unit;

k. The estimated emissions resulting from the testing.

502 RECORDS RETENTION:

502.1 Maricopa County shall retain permits issued for open burning available for inspection by the ADEQ for five years.

502.2 For each permit issued, Maricopa County shall have a means of contacting the person authorized by the permit to set an open fire, if an order to extinguish open burning is issued by either the County or ADEQ. Therefore the permit application must contain the name of a contact person and shall list a means of contacting that person.

503 PROGRAM REVIEW:

503.1 Maricopa County shall hold or attend a public meeting annually for interested parties to review operations of the open outdoor fire program and discuss emission reduction techniques.

503.2 Maricopa County shall annually submit to the ADEQ a record of daily burn activity by May 15 of each calendar year.

APPENDIX TO RULE 314

AIR CURTAIN DESTRUCTOR AND FIREBOX PROCEDURES

A. Air Curtain Destructor Requirements: The following must be complied with prior to approval of an air curtain destructor by the Control Officer:

1. The length of the firebox must not exceed the length of the plenum.

2. The firebox shall be lined with refractory materials.

3. The depth of the firebox shall be of such a distance to allow all burning material to be below the curtain of air created by the air curtain destructor.

4. The width of the firebox shall not extend beyond the length of the nozzle action.

5. The firebox must have 4 stable, vertical sides.

6. When air curtain destructor locations are changed, an inspection of the newly located air curtain destructor must be made by the Control Officer prior to burning.

B. Equipment Set-Up:

1. An owner or operator of an air curtain destructor shall use a firebox and not a pit or trench to conduct open outdoor burning.

2. The equipment must be positioned so as to allow the blower's airflow to strike at a downward angle no less than 24 inches below the opposite rim of the firebox.

3. There shall be at least 1,000 feet between any two air curtain destructors.

4. An air curtain destructor shall be located at least 500 feet from any residence or building structure.

5. An air curtain destructor shall be located at least 500 feet from any pipeline or fuel storage area.

6. An air curtain destructor shall be located at least 250 feet from any power lines.

7. Material that is not being worked or is being stockpiled to be burned at a later date by using an air curtain destructor shall be kept at least 75 feet from the air curtain destructor while the burn is taking place.

C. Operation of Blower:

1. The proper blower speed must be maintained according to manufacturer's specifications.

2. The blower must be operating when and as long as any material in the firebox is burning.

D. Loading of the Firebox:

1. When loading (feeding) the firebox, the material must not extend above the air curtain (blower airflow).

2. The loading of materials into the firebox must be discontinued at a minimum of 2 hours prior to the end of the designated burning hours. The blower must continue to operate until the end of the burning hours or until combustion is completed.

3. Adequate measures must be taken to assure that no emissions emanate from materials left in the firebox (i.e., when combustion is completed). All materials left in the firebox must be extinguished with water or covered over with a minimum of 1 foot of mineral soil.

E. **Firebox Clean-Out:** All materials removed from the firebox must be completely extinguished and all reasonable precautions taken to control emissions.

F. **Burning Hours for Air Curtain Destructors:** The following burning hours apply:

- April - September 6 a.m. - 6 p.m.
- October - March 10 a.m. - 5 p.m.

While complying with the above schedule, the permittee must also obtain permission from the Control Officer on each day of burning. Burning using an air curtain destructor is not authorized on weekends nor on holidays. Prohibited materials shall never be burned in an air curtain destructor.

REGULATION III - CONTROL OF AIR CONTAMINANTS

RULE 315
SPRAY COATING OPERATIONS

INDEX

SECTION 100 - GENERAL

101 PURPOSE

SECTION 200 - DEFINITIONS (NOT INCLUDED)

SECTION 300 - STANDARDS

301 CONTROLS REQUIRED

302 EXEMPTIONS

SECTION 400 - MONITORING AND RECORDS (NOT INCLUDED)

SECTION 500 - TEST METHODS

501 TEST METHODS ADOPTED BY REFERENCE

Revised 07/13/88
Revised 08/19/98
Revised 11/17/99

MARICOPA COUNTY
AIR POLLUTION CONTROL REGULATIONS

REGULATION III - CONTROL OF AIR CONTAMINANTS

RULE 315
SPRAY COATING OPERATIONS

SECTION 100 - GENERAL

101 PURPOSE: To limit the emission of particulate matter to the atmosphere from spray coating operations.

SECTION 200 – DEFINITIONS (NOT INCLUDED)

SECTION 300 – STANDARDS

301 CONTROLS REQUIRED: No person shall use or operate any spray painting or spray coating equipment unless one of the following conditions is met:

301.1 Equipment Operated In Enclosures Located Outside a Building: Spray coating equipment shall be operated inside an enclosure which has at least three sides a minimum of eight feet in height and able to contain any object or objects being coated.

a. Three-Sided Enclosures: Spray shall be directed in a horizontal or downward pointing manner so that overspray is directed at the walls or floor of the enclosure. No spraying shall be conducted within three feet of any open end and/or within two feet of the top of the enclosure.

b. More Complete Enclosures: For enclosures with three sides and a roof or complete enclosures, spray shall be directed into the enclosure so that the overspray is directed away from any opening in the enclosure. No spraying shall be conducted within three feet of any open end and/or within two feet of any open top of the enclosure.

301.2 Equipment Operated With Forced Air Exhaust Vented Directly Outside: Any spray booth or enclosure with forced air exhaust must have a filtering system with an average overspray removal efficiency of at least 92% by weight for the type of material being sprayed. No gaps, sags or holes shall be present in the filters and all exhaust must be discharged into the atmosphere. Spray Booths or enclosures utilizing a water curtain, waterfall or other means to capture particulates in a liquid medium shall effectively

remove at least 92% of the overspray and be operated in a manner consistent with the manufacturer's specifications to achieve such efficiency for the type of material being sprayed.

302 EXEMPTIONS: The controls required in Section 301 of this rule shall not apply:

302.1 To the spray coating of buildings or dwellings, including appurtenances and any other ornamental objects that are not normally removed prior to coating

302.2 To the spray coating of facility equipment or structures which are fixed in a permanent location and cannot easily be moved into an enclosure or spray booth and which are not normally dismantled or moved prior to coating.

302.3 To the spray coating of objects which cannot fit inside of an enclosure with internal dimensions of 10'W X 25'L X 8'H.

302.4 To enclosures and spray booths and exhausts located entirely in a completely enclosed building, providing that any vents or openings do not allow overspray to be emitted into the outside air.

302.5 To any coating operations utilizing only hand-held aerosol cans.

SECTION 400 – MONITORING AND RECORDS (NOT INCLUDED)

SECTION 500 – TEST METHODS

501 TEST METHODS ADOPTED BY REFERENCE: Determination of filter efficiency shall be determined by either ASHRAE Standard 52-76 (publication date of May 1976) or by Test Method 319 (40 CFR 63, Appendix A, publication date of July 1, 1999). These methods are adopted by reference. This adoption by reference includes no future editions or amendments. Copies of the test methods referenced in this section are available at the Maricopa County Environmental Services Department, 1001 North Central Avenue, Suite 201, Phoenix, Arizona 85004-1942.

REGULATION III – CONTROL OF AIR CONTAMINANTS

RULE 316
NONMETALLIC MINERAL PROCESSING

INDEX

SECTION 100 – GENERAL

101 PURPOSE

102 APPLICABILITY

SECTION 200 – DEFINITIONS

201 AFFECTED OPERATION

202 AGGREGATE TRUCK

203 APPROVED EMISSION CONTROL SYSTEM

204 AREA ACCESSIBLE TO THE PUBLIC

205 ASPHALTIC CONCRETE PLANT/ASPHALT PLANT

206 BAGGING OPERATION

207 BATCH TRUCK

208 BELT CONVEYOR

209 BERMS AND GUARD RAILS

210 BULK MATERIAL

211 COHESIVE HARD SURFACE

212 CONCRETE PLANT

213 CONVEYING SYSTEM

214 CRUSHER

215 DISTURBED SURFACE AREA

216 DRY MIX CONCRETE PLANT

217 DUST-GENERATING OPERATION

218 DUST SUPPRESSANT

219 ENCLOSED TRUCK OR RAILCAR LOADING STATION

220 END OF WORK DAY

221 FABRIC FILTER BAGHOUSE

222 FREEBOARD

223 FUGITIVE DUST CONTROL MEASURE

FUGITIVE DUST CONTROL TECHNICIAN
FUGITIVE DUST EMISSION
GRINDING MILL
HAUL/ACCESS ROAD
HAUL TRUCK
INFREQUENT OPERATIONS
MATERIAL DELIVERY TRUCK
MIXER TRUCK
MOTOR VEHICLE
NEW FACILITY
NONMETALLIC MINERAL
NONMETALLIC MINERAL PROCESSING PLANT
OPEN STORAGE PILE
OVERBURDEN OPERATION
PARTICULATE MATTER EMISSIONS
PAVE
PERMANENT AREAS OF A FACILITY
PORTLAND CEMENT PLANT
PRESSURE CONTROL SYSTEM
PROCESS
PROCESS SOURCE
PRODUCTION WORK SHIFT
PUBLIC ROADWAYS
RETURNED PRODUCTS
RUMBLE GRATE
SCREENING OPERATION
SILO
SILT
SPILLAGE
STACK EMISSIONS
STAGING AREA
TEMPORARY FACILITY
TRACKOUT

257 TRACKOUT CONTROL DEVICE

258 TRANSFER POINT

259 TRUCK DUMPING

260 TRUCK WASHER

261 UNPAVED ROAD

262 VENT

263 WHEEL WASHER

264 WIND EVENT

SECTION 300 – STANDARDS

301 CRUSHING AND SCREENING – PROCESS EMISSION LIMITATIONS AND CONTROLS

302 ASPHALTIC CONCRETE PLANTS – PROCESS EMISSION LIMITATIONS AND CONTROLS

303 RAW MATERIAL STORAGE AND DISTRIBUTION, CONCRETE PLANTS, AND/OR BAGGING OPERATIONS – PROCESS EMISSION LIMITATIONS AND CONTROLS

304 OTHER ASSOCIATED OPERATIONS

305 AIR POLLUTION CONTROL EQUIPMENT AND APPROVED EMISSION CONTROL SYSTEM (ECS)

306 FUGITIVE DUST EMISSION LIMITATIONS

307 FUGITIVE DUST CONTROL MEASURES

308 FACILITY INFORMATION SIGN

309 FUGITIVE DUST CONTROL TECHNICIAN

310 BASIC DUST CONTROL TRAINING CLASS

311 DUST CONTROL PLAN

312 GENERAL REQUIREMENTS

SECTION 400 – ADMINISTRATIVE REQUIREMENTS

401 COMPLIANCE SCHEDULE

SECTION 500 – MONITORING AND RECORDS

501 MONITORING, RECORDKEEPING AND REPORTING

502 COMPLIANCE DETERMINATION FOR PROCESS EMISSIONS AND CONTROLS

503 COMPLIANCE DETERMINATION FOR EMISSIONS AND CONTROLS THAT ARE REGULATED BY SECTION 304 AND/OR SECTION 306 OF THIS RULE

504 COMPLIANCE DETERMINATION FOR SOIL MOISTURE CONTENT AND SOIL COMPACTION CHARACTERISTICS TEST METHODS ADOPTED BY REFERENCE

505 COMPLIANCE DETERMINATION FOR STABILIZATION STANDARDS TEST METHODS ADOPTED BY REFERENCE

506 CERTIFIED STREET SWEEPERS EQUIPMENT LIST ADOPTED BY REFERENCE

Adopted 07/06/93
Revised 04/21/99
Revised 06/08/05
Revised 03/12/08

MARICOPA COUNTY
AIR POLLUTION CONTROL REGULATIONS
REGULATION III – CONTROL OF AIR CONTAMINANTS

RULE 316
NONMETALLIC MINERAL PROCESSING

SECTION 100 – GENERAL

101 **PURPOSE:** To limit the emission of particulate matter into the ambient air from any nonmetallic mineral processing plant and/or rock product processing plant.

102 **APPLICABILITY:** The provisions of this rule shall apply to any commercial and/or industrial nonmetallic mineral processing plant and/or rock product processing plant. Compliance with the provisions of this rule shall not relieve any person subject to the requirements of this rule from complying with any other federally enforceable New Source Performance Standards. In such case, the more stringent standard shall apply.

SECTION 200 – DEFINITIONS: See Rule 100 (General Provisions and Definitions) of these rules for definitions of terms that are used but not specifically defined in this rule. For the purpose of this rule, the following definitions shall apply:

201 **AFFECTED OPERATION –** An operation that processes nonmetallic minerals or that is related to such processing and process sources including, but not limited to: excavating, crushers, grinding mills, screening equipment, conveying systems, elevators, transfer points, bagging operations, storage bins, enclosed truck and railcar loading stations, and truck dumping.

202 **AGGREGATE TRUCK –** Any truck with an open top used to transport the products of nonmetallic mineral processing plants and/or rock product processing plants.

203 **APPROVED EMISSION CONTROL SYSTEM –** A system for reducing particulate emissions, consisting of collection and/or control devices which are approved in writing by the Control Officer and are designed and operated in accordance with good engineering practice.

204 **AREA ACCESSIBLE TO THE PUBLIC –** Any retail parking lot or public roadway that is open to public travel primarily for the purposes unrelated to the dust-generating operation.

205 **ASPHALTIC CONCRETE PLANT/ASPHALT PLANT –** Any facility used to manufacture asphaltic concrete by mixing graded aggregate and asphaltic cements.

206 **BAGGING OPERATION –** The mechanical process by which bags are filled with nonmetallic minerals.

207 **BATCH TRUCK –** Any truck that loads and transports products produced by batch.

208 **BELT CONVEYOR –** A conveying device that transports material from one location to another by means of an endless belt that is carried on a series of idlers and routed around a pulley at each end.

209 **BERMS AND GUARD RAILS –** A pile or mound of material along an elevated roadway capable of moderating or limiting the force of a vehicle in order to impede the vehicle's passage over the bank of the roadway.

210 **BULK MATERIAL –** Any material including, but not limited to: earth, rock, silt, sediment, sand, gravel, soil, fill, aggregate less than two inches in length or diameter (i.e., aggregate base course (ABC), dirt, mud, demolition debris, cotton, trash, cinders, pumice, saw dust, feeds, grains, fertilizers, fluff (from shredders), and dry concrete,) that is capable of producing fugitive dust.

211 **COHESIVE HARD SURFACE –** Any material including, but not limited to: pavement, recycled asphalt mixed with a binder, or a dust suppressant other than water applied and maintained as a roadway surface.

212 **CONCRETE PLANT –** Any facility used to manufacture concrete by mixing water, aggregate, and cement.

213 **CONVEYING SYSTEM –** A device for transporting materials from one piece of equipment or location to another location within a facility. Conveying systems include, but are not limited to: feeders, belt conveyers, bucket elevators and pressure control systems.

214 **CRUSHER –** A machine used to crush any nonmetallic minerals including, but not limited to, the following types: jaw, gyratory, cone, roll, rod mill, hammermill, and impactor.

215 **DISTURBED SURFACE AREA –** A portion of the earth's surface (or material placed thereupon) which has been physically moved, uncovered, destabilized, or otherwise modified from its undisturbed native condition, thereby increasing the potential for the emission of fugitive dust.

216 **DRY MIX CONCRETE PLANT –** Any facility used to manufacture a mixture of aggregate and cements without the addition of water.

217 **DUST-GENERATING OPERATION –** Any activity capable of generating fugitive dust including, but not limited to: land clearing, earthmoving, weed abatement by discing or blading, excavating, construction, demolition, bulk material handling, storage and/or transporting operations, vehicle use and movement, the operation of any outdoor equipment, or unpaved parking lots. For the purpose of this rule, landscape maintenance and playing on or maintaining a field used for non-motorized sports shall not be considered a dust-generating operation. However, landscape maintenance shall not include grading, trenching, or any other mechanized surface disturbing activities performed to establish initial landscapes or to redesign existing landscapes.

218 **DUST SUPPRESSANT –** Water, hygroscopic material, solution of water and chemical surfactant, foam, non-toxic chemical stabilizer, or any other dust palliative, which is not prohibited for ground surface application by the EPA or the Arizona Department of Environmental Quality (ADEQ), or any applicable law, rule, or regulation, as a treatment material for reducing fugitive dust emissions.

219 **ENCLOSED TRUCK OR RAILCAR LOADING STATION –** That portion of a nonmetallic mineral processing plant where nonmetallic minerals are loaded by an enclosed conveying system into enclosed trucks or railcars.

220 **END OF WORK DAY –** The end of a working period that may include one or more work shifts. If working 24 hours a day, the end of a working period shall be considered no later than 8 pm.

221 **FABRIC FILTER BAGHOUSE –** Tube-shaped filter bags - long small-diameter fabric tubes referred to as "bags" arranged in parallel flow paths and designed to separate particles and flue gas.

222 **FREEBOARD –** The vertical distance between the top edge of a cargo container area and the highest point at which the bulk material contacts the sides, front, and back of a cargo container area.

223 **FUGITIVE DUST CONTROL MEASURE –** A technique, practice, or procedure used to prevent or minimize the generation, emission, entrainment, suspension, and/or airborne transport of fugitive dust.

224 **FUGITIVE DUST CONTROL TECHNICIAN –** A person with the authority to expeditiously employ sufficient fugitive dust control measures to ensure compliance with Rule 316 of these rules at an active operation.

225 **FUGITIVE DUST EMISSION –** Particulate matter not collected by a capture system that is entrained in the ambient air and is caused from human and/or natural activities.

226 **GRINDING MILL –** A machine used for the wet or dry fine crushing of any nonmetallic mineral. Grinding mills include, but are not limited to, the following types:

hammer, roller, rod, pebble and ball, and fluid energy. The grinding mill includes the air conveying system, air separator, or air classifier, where such systems are used.

227 **HAUL/ACCESS ROAD –** Any on-site unpaved road that is used by haul trucks to carry materials from the quarry or pit to different locations within the facility. For the purpose of this definition, haul/access roads are not in permanent areas of a facility.

228 **HAUL TRUCK –** Any fully or partially open-bodied self-propelled vehicle including any non-motorized attachments, such as but not limited to: trailers or other conveyances that are connected to or propelled by the actual motorized portion of the vehicle used for transporting bulk materials.

229 **INFREQUENT OPERATIONS –** Operations that have state mine identification, approved reclamation plans and bonding as required by State Mining and Reclamation Act of 1975, and only operate on an average of 52 days per year over the past three years from June 8, 2005.

230 **MATERIAL DELIVERY TRUCK –** Any truck that loads and transports product to customers.

231 **MIXER TRUCK –** Any truck that mixes cement and other ingredients in a drum to produce concrete.

232 **MOTOR VEHICLE –** A self-propelled vehicle for use on the public roads and highways of the State of Arizona and required to be registered under the Arizona State Uniform Motor Vehicle Act, including any non-motorized attachments, such as but not limited to: trailers or other conveyances which are connected to or propelled by the actual motorized portion of the vehicle.

233 **NEW FACILITY –** A facility subject to this rule that has not been operated by such facility prior to June 8, 2005.

234 **NONMETALLIC MINERAL –** Any of the following minerals or any mixture of which the majority is any of the following minerals:

234.1 Crushed and broken stone, including limestone, dolomite, granite, rhyolite, traprock, sandstone, quartz, quartzite, marl, marble, slate, shale, oil shale, and shell.
234.2 Sand and gravel.
234.3 Clay including kaolin, fireclay, bentonite, fuller's earth, ball clay, and common clay.
234.4 Rock salt.
234.5 Gypsum.
234.6 Sodium compounds including sodium carbonate, sodium chloride, and sodium sulfate.
234.7 Pumice.

234.8 Gilsonite.
234.9 Talc and pyrophyllite.
234.10 Boron including borax, kernite, and colemanite.
234.11 Barite.
234.12 Fluorspar.
234.13 Feldspar.
234.14 Diatomite.
234.15 Perlite.
234.16 Vermiculite.
234.17 Mica.
234.18 Kyanite including andalusite, sillimanite, topaz, and dumortierite.
234.19 Coal.

235 **NONMETALLIC MINERAL PROCESSING PLANT –** Any facility utilizing any combination of equipment or machinery that is used to mine, excavate, separate, combine, crush, or grind any nonmetallic mineral including, but not limited to: lime plants, coal fired power plants, steel mills, asphalt plants, concrete plants, Portland cement plants, raw material storage and distribution, and sand and gravel plants. Rock Product Processing Plants are included in this definition.

236 **OPEN STORAGE PILE –** Any accumulation of bulk material with a 5% or greater silt content that has a total surface area of 150 square feet or more and that at any one point attains a height of three feet. Silt content shall be assumed to be 5% or greater unless a person can show, by testing in accordance with ASTM Method C136-06 or other equivalent method approved in writing by the Control Officer and the Administrator, that the silt content is less than 5%. For the purpose of this rule, the definition of open storage pile does not include berms and guard rails that are installed to comply with 30 Code of Federal Regulations (CFR) 56.93000.

237 **OVERBURDEN OPERATION –** An operation that removes and/or strips soil, rock, or other materials that lie above a natural nonmetallic mineral deposit and/or in-between a natural nonmetallic mineral deposit.

238 **PARTICULATE MATTER EMISSIONS –** Any and all finely divided solid or liquid materials other than uncombined water released to the ambient air as measured by the applicable state and federal test methods.

239 **PAVE –** To apply and maintain asphalt, concrete, or other similar material to a roadway surface (i.e., asphaltic concrete, concrete pavement, chip seal, rubberized asphalt, or recycled asphalt mixed with a binder).

240 **PERMANENT AREAS OF A FACILITY –** Areas that remain in-place for 180 days or more in 12 consecutive months. Permanent areas of a facility include the following areas: entrances, exits, parking areas, office areas, warehouse areas, maintenance areas (not including maintenance areas that are in the quarry or pit), concrete plant areas, asphaltic plant areas, and roads leading to and from such areas.

241 **PORTLAND CEMENT PLANT –** Any facility that manufactures Portland Cement using either a wet or dry process.

242 **PRESSURE CONTROL SYSTEM –** System in which loads are moved in the proper sequence, at the correct time, and at the desired speed through use of valves that control the direction of air flow, regulate actuator speed, and respond to changes in air pressure.

243 **PROCESS –** One or more operations including those using equipment and technology in the production of goods or services or the control of by-products or waste.

244 **PROCESS SOURCE –** The last operation of a process or a distinctly separate process which produces an air contaminant and which is not a pollution abatement operation.

245 **PRODUCTION WORK SHIFT –** An eight-hour operating period based on the 24-hour operating schedule.

246 **PUBLIC ROADWAYS –** Any roadways that are open to public travel.

247 **RETURNED PRODUCTS –** Left-over concrete or asphalt products that were not used at a job site and were returned to the facility.

248 **RUMBLE GRATE –** A system where the vehicle is vibrated while traveling over grates with the purpose of removing dust and other debris.

249 **SCREENING OPERATION –** A device that separates material according to its size by passing undersize material through one or more mesh surfaces (screens) in series and retaining oversize material on the mesh surfaces (screens).

250 **SILO –** An elevated storage container with or without a top that releases material thru the bottom.

251 **SILT –** Any aggregate material with a particle size less than 75 micrometers in diameter, which passes through a No. 200 sieve.

252 **SPILLAGE –** Any quantity of nonmetallic minerals/materials that spill while being processed or after having been processed by an affected operation, where such spilled nonmetallic minerals/materials can generate or cause fugitive dust emissions.

253 **STACK EMISSIONS –** The particulate matter emissions that are released to the atmosphere from a capture system through a building vent, stack or other point source discharge.

254 **STAGING AREA –** A place where aggregate trucks and mixer trucks temporarily queue for their loading or unloading.

255 **TEMPORARY FACILITY –** A facility that occupies a designated site for not more than 180 days in a calendar year.

256 **TRACKOUT –** Any and all bulk materials that adhere to and agglomerate on the surfaces of motor vehicles, haul trucks, and/or equipment (including tires) and that have fallen or been deposited onto a paved area accessible to the public.

257 **TRACKOUT CONTROL DEVICE –** A gravel pad, grizzly, wheel washer, rumble grate, paved area, truck washer, or other equivalent trackout control device located at the point of intersection of an unpaved area and a paved area accessible to the public that controls and prevents trackout and/or removes particulate matter from tires and the exterior surfaces of aggregate trucks, haul trucks, and/or motor vehicles that traverse a facility.

258 **TRANSFER POINT –** A point in a conveying operation where nonmetallic mineral is transferred from or to a belt conveyor except for transfer to a stockpile.

259 **TRUCK DUMPING –** The unloading of nonmetallic minerals from movable vehicles designed to transport nonmetallic minerals from one location to another. Movable vehicles include, but are not limited to: trucks, front end loaders, skip hoists, and railcars.

260 **TRUCK WASHER –** A system that is used to wash the entire surface and the tires of a truck.

261 **UNPAVED ROAD –** Any roads, equipment paths, or travel ways that are not covered by typical roadway materials. Public unpaved roads are any unpaved roadway owned by federal, state, county, municipal, or governmental or quasigovernmental agencies. Private unpaved roads are all other unpaved roadways not defined as public.

262 **VENT –** An opening through which there is mechanically or naturally induced air flow for the purpose of exhausting air carrying particulate matter.

263 **WHEEL WASHER –** A system that is capable of washing the entire circumference of each wheel of the vehicle.

264 **WIND EVENT –** When the 60-minute average wind speed is greater than 25 miles per hour.

SECTION 300 – STANDARDS

301 CRUSHING AND SCREENING – PROCESS EMISSION LIMITATIONS AND CONTROLS:

301.1 **Process Emission Limitations:** The owner and/or operator shall not discharge or cause or allow to be discharged into the ambient air:

a. Stack emissions exceeding 7% opacity and containing more than 0.02 grains/dry standard cubic foot (gr/dscf) (50 mg/dscm) of particulate matter.

b. Fugitive dust emissions exceeding 7% opacity from any transfer point on a conveying system.

c. Fugitive dust emissions exceeding 15% opacity from any crusher.

d. Fugitive dust emissions exceeding 10% opacity from any affected operation or process source, excluding truck dumping.

e. Fugitive dust emissions exceeding 20% opacity from truck dumping directly into any screening operation, feed hopper, or crusher. Opacity observations to determine compliance with this section of this rule shall be conducted in accordance with the techniques specified in Appendix C-Fugitive Dust Test Methods of these rules.

301.2 Controls: The owner and/or operator shall implement process controls described in Section 301.2(a), Section 301.2(b), and Section 301.2(c) of this rule or shall implement process controls described in Section 301.2(a) and Section 301.2(d) of this rule:

a. Enclose sides of all shaker screens.

b. Permanently mount watering systems (e.g., spray bars or an equivalent control) on the points listed below for crushers, shaker screens, and material transfer points.

(1) Inlet and outlet of all crushers;

(2) Outlet of all shaker screens; and

(3) Outlet of all material transfer points, excluding wet plants.

c. Operate watering systems (e.g., spray bars or an equivalent control) on the points listed in Section 301.2(b) of this rule for crushers, shaker screens, and material transfer points, excluding wet plants, to continuously maintain a 4% minimum moisture content.

(1) The watering systems shall be maintained in good operating condition, as verified by daily inspections.

(2) The owner and/or operator shall investigate and correct any problems before continuing and/or resuming operations.

(3) The owner and/or operator shall conduct soil moisture tests as follows:

(a) If the owner and/or operator is required to have in place a Fugitive Dust Control Technician according to Section 309 of this rule, then soil moisture tests shall be conducted twice daily in accordance with the test methods described in Section 502 of this rule.

(b) If the owner and/or operator is not required to have in place a Fugitive Dust Control Technician according to Section 309 of this rule, then soil moisture tests shall be conducted daily in accordance with the test methods described in Section 502 of this rule.

(c) If the owner and/or operator demonstrates that the 4% minimum moisture content is maintained for a minimum of four weeks, then soil moisture tests may be conducted weekly in accordance with the test methods described in Section 502 of this rule.

(d) If the owner and/or operator fails to comply with the opacity limitations described in Section 301.1, Section 306.1, or Section 306.2 of this rule and/or if two consecutive soil moisture tests are below 4%, then the owner and/or operator shall conduct soil moisture tests in accordance with Section 301.2(c)(3)(a) or Section 301.2(c)(3)(b) of this rule, as applicable.

(e) If the owner and/or operator of a facility complies with both of the following requirements, then the number of sampling points identified in Section 502.3(c)(1) through (3) of this rule may be reduced:

(i) A soil moisture test is conducted in accordance with the test methods described in Section 502 of this rule at the primary crusher, which indicates that at least a 5% minimum moisture content is maintained; and

(ii) A demonstration that complies with Section 502.3(d) of this rule is submitted to and approved by the Control Officer and is complied with in accordance with Section 502.3(d) of this rule.

(4) The owner and/or operator may request in a permit application, with explanation, an alternative plan that justifies a minimum moisture content other than 4% and that justifies conducting fewer soil moisture tests as are required. In the request, the owner and/or operator shall submit to the Control Officer documentation regarding a minimum moisture content other than 4%, including, but not limited to: economics, emissions rates, water availability, and technical feasibility. In addition, the owner and/or operator shall demonstrate that the proposed alternative compliance demonstration plan will be equivalent in determining compliance with the

soil moisture content requirements. Prior approval from the Control Officer and the Administrator shall be received before implementing the plan.

d. Enclose and exhaust the regulated process to a properly sized fabric filter baghouse.

302 ASPHALTIC CONCRETE PLANTS – PROCESS EMISSION LIMITATIONS AND CONTROLS:

302.1 Process Emission Limitations: The owner and/or operator shall not discharge or cause or allow to be discharged into the ambient air:

a. For non-rubberized asphaltic concrete plants, stack emissions exceeding 5% opacity and containing more than 0.04 gr/dscf (90 mg mg/dscm) of particulate matter.

b. For rubberized asphaltic concrete plants (when producing rubberized asphalt only), stack emissions exceeding 20% opacity and containing more than 0.04 gr/dscf (90 mg/dscm) of particulate matter.

c. Fugitive dust emissions exceeding 10% opacity from any affected operation or process source, excluding truck dumping.

302.2 Controls: The owner and/or operator shall, from all drum dryers, control and vent exhaust to a properly sized fabric filter baghouse.

303 RAW MATERIAL STORAGE AND DISTRIBUTION, CONCRETE PLANTS, AND/OR BAGGING OPERATIONS – PROCESS EMISSION LIMITATIONS AND CONTROLS:

303.1 Process Emission Limitations: The owner and/or operator shall not discharge or cause or allow to be discharged into the ambient air:

a. Stack emissions exceeding 5% opacity.

b. Fugitive dust emissions exceeding 10% opacity from any affected operation or process source, excluding truck dumping.

303.2 Controls: The owner and/or operator shall implement the following process controls:

a. On all cement, lime, and/or fly ash storage silo(s), install an operational overflow warning system/device. The system/device shall be designed to alert operator(s) to stop the loading operation when the cement, lime, and/or fly ash

storage silo(s) are reaching a capacity that could adversely impact pollution abatement equipment.

b. On new cement, lime, and/or fly ash storage silos, install a properly sized fabric filter baghouse or equivalent device designed to meet a maximum outlet grain loading of 0.01 gr/dscf.

c. On dry mix concrete plant loading stations/truck mixed product, implement one of the following process controls:

(1) Install a rubber fill tube;

(2) Install a water spray;

(3) Install a properly sized fabric filter baghouse or delivery system;

(4) Enclose mixer loading stations such that no visible emissions occur; or

(5) Conduct mixer loading stations in an enclosed process building such that no visible emissions from the building occur during the mixing activities.

d. On cement silo filling processing/loading operations controls, install a pressure control system designed to shut-off cement silo filling processes/loading operations, if pressure from delivery truck is excessive, as defined in O&M Plan.

304 OTHER ASSOCIATED OPERATIONS: All other affected operations or process sources not specifically listed in Sections 301, 302, or 303 of this rule associated with the processing of nonmetallic minerals, all other fugitive dust emission limitations not specifically listed in Section 306 of this rule, all other fugitive dust control measures not specifically listed in Section 307 of this rule, and all overburden operations shall, at a minimum, meet the provisions of Rule 310 of these rules.

305 AIR POLLUTION CONTROL EQUIPMENT AND APPROVED EMISSION CONTROL SYSTEM (ECS): An owner and/or operator of a facility shall provide, properly install and maintain in calibration, in good working order, and in operation air pollution control equipment required by this rule. When selecting air pollution control equipment required by this rule, the owner and/or operator of a facility may consider the site-specific and/or material-specific conditions and logistics of a facility. When doing so, some air pollution control equipment may be more reasonable to implement than others. Regardless, any air pollution control equipment that is installed must achieve the applicable standard(s) required by this rule, as determined by the corresponding test method(s), as applicable, and must achieve other applicable standard(s) set forth in this rule. The owner and/or operator of a facility may submit a request to the Control Officer and the Administrator for the use of alternative air pollution control equipment. The request shall include the proposed alternative air pollution control equipment, the air

pollution control equipment that the alternative would replace, and a detailed statement or report demonstrating that the air pollution control equipment would result in equivalent or better emission control than the equipment prescribed in this rule. Nothing in this rule shall be construed to prevent an owner and/or operator of a facility from making such demonstration. Following a decision by the Control Officer and the Administrator to grant the petition, the facility shall incorporate the alternative air pollution control equipment in any required Operation and Maintenance (O&M) Plan.

305.1 Operation and Maintenance (O&M) Plan Requirements for ECS:

a. An owner and/or operator of a facility shall provide and maintain, readily available on-site at all times, (an) O&M Plan(s) for any ECS, any other emission processing equipment, and any ECS monitoring devices that are used pursuant to this rule or to an air pollution control permit.

b. The owner and/or operator of a facility shall submit to the Control Officer for approval the O&M Plan(s) for each ECS and for each ECS monitoring device that is used pursuant to this rule.

c. The owner and/or operator of a facility shall comply with all the identified actions and schedules provided in each O&M Plan.

305.2 Operation and Maintenance (O&M) Plan Requirements for Dust Control Measures:

a. An owner and/or operator of a facility shall provide and maintain, readily available on-site at all times, (an) O&M Plan(s) for equipment associated with any process fugitive emissions and fugitive dust control measures (i.e., gravel pads, wheel washers, truck washers, rumble grates, watering systems, and street sweepers) that are implemented to comply with this rule or an air pollution control permit.

b. The owner and/or operator of a facility shall comply with all the identified actions and schedules provided in each O&M Plan.

305.3 Providing and Maintaining ECS Monitoring Devices: An owner and/or operator of a facility operating an ECS pursuant to this rule shall install, maintain, and calibrate monitoring devices described in the O&M Plan(s). The monitoring devices shall measure pressures, rates of flow, and/or other operating conditions necessary to determine if the control devices are functioning properly.

305.4 O&M Plan Responsibility: An owner and/or operator of a facility that is required to have an O&M Plan pursuant to Section 305 of this rule must fully comply with all O&M Plans that the owner and/or operator has submitted for approval, even if such O&M Plans have not yet been approved, unless notified in writing by the Control Officer.

306 FUGITIVE DUST EMISSION LIMITATIONS:

306.1 20% Opacity Limitation: For emissions that are not already regulated by an opacity limit, the owner and/or operator of a facility shall not discharge or cause or allow to be discharged into the ambient air fugitive dust emissions exceeding 20% opacity, in accordance with the test methods described in Section 503 of this rule and in Appendix C-Fugitive Dust Test Methods of these rules.

306.2 Visible Emission Limitation Beyond Property Line: An owner and/or operator of a facility shall not cause or allow fugitive dust emissions from any active operation, open storage pile, or disturbed surface area associated with such facility such that the presence of such fugitive dust emissions remain visible in the atmosphere beyond the property line of such facility.

306.3 Wind Event: The fugitive dust emission limitations described in Section 306.1 and Section 306.2 of this rule shall not apply during a wind event, if the owner and/or operator of a facility meets the following conditions:

a. Has implemented the fugitive dust control measures described in Section 307 of this rule, as applicable;

b. Has compiled and retained records, in accordance with Section 501.4 of this rule, and has documented by records the occurrence of a wind event on the day(s) in question. The occurrence of a wind event must be determined by the nearest Maricopa County Air Quality Department monitoring station, from any other certified meteorological station, or by a wind instrument that is calibrated according to manufacturer's standards and that is located at the site being checked; and

c. Has implemented the following high wind fugitive dust control measures, as applicable:

(1) For an active operation, implement one of the following fugitive dust control measures, in accordance with the test methods described in Section 503 and Section 504 of this rule and in Appendix C-Fugitive Dust Test Methods of these rules:

(a) Cease active operation that may contribute to an exceedance of the fugitive dust emission limitations described in Section 306.1 of this rule for the duration of the wind event and, if active operation is ceased for the remainder of the work day, stabilize the area; or

(b) Before and during active operations, apply water or other suitable dust suppressant other than water to keep the soil visibly moist.

(2) For an inactive open storage pile, implement one of the following fugitive dust control measures, in accordance with the test methods described in Section 503 and Section 504 of this rule and in Appendix C-Fugitive Dust Test Methods of these rules:

(a) Maintain a soil crust by applying water or other suitable dust suppressant other than water or by implementing another fugitive dust control measure, in sufficient quantities to meet the stabilization standards described in Section 505 of this rule.

(b) Cover open storage pile with tarps, plastic, or other material such that wind will not remove the covering, if open storage pile is less than eight feet high.

(3) For an inactive disturbed surface area, implement one of the following fugitive dust control measures, in accordance with the test methods described in Section 503 and Section 504 of this rule and in Appendix C-Fugitive Dust Test Methods of these rules:

(a) Uniformly apply and maintain surface gravel or a dust suppressant other than water; or

(b) Maintain a soil crust by applying water or other suitable dust suppressant other than water or by implementing another fugitive dust control measure, in sufficient quantities to meet the stabilization standards described in Section 505 of this rule.

306.4 Silt Loading and Silt Content Standards for Unpaved Roads and Unpaved Parking and Staging Areas: From unpaved roads and unpaved parking and staging areas, the owner and/or operator of a facility shall not discharge or allow to be discharged into the ambient air fugitive dust emissions exceeding 20% opacity, in accordance with the test methods described in Section 502 of this rule and in Appendix C-Fugitive Dust Test Methods of these rules, and one of the following:

a. For unpaved roads, silt loading equal to or greater than 0.33 oz/ft^2 or silt content exceeding 6%.

b. For unpaved parking and staging areas, silt loading equal to or greater than 0.33 oz/ft^2 or silt content exceeding 8%.

306.5 Stabilization Standards:

a. An owner and/or operator of a facility with an open area or a disturbed surface area on which no activity is occurring (including areas that are temporarily or permanently inactive) shall be considered in violation of this rule if area is not

maintained in a manner that meets at least one of the standards listed below, as applicable.

(1) Maintain a soil crust;

(2) Maintain a threshold friction velocity (TFV) for disturbed surface areas corrected for non-erodible elements of 100 cm/second or higher;

(3) Maintain a flat vegetative cover (i.e., attached (rooted) vegetation or unattached vegetative debris lying on the surface with a predominant horizontal orientation that is not subject to movement by wind) that is equal to at least 50%;

(4) Maintain a standing vegetative cover (i.e., vegetation that is attached (rooted) with a predominant vertical orientation) that is equal to or greater than 30%;

(5) Maintain a standing vegetative cover (i.e., vegetation that is attached (rooted) with a predominant vertical orientation) that is equal to or greater than 10% and where the threshold friction velocity is equal to or greater than 43 cm/second when corrected for non-erodible elements;

(6) Maintain a percent cover that is equal to or greater than 10% for non-erodible elements; or

(7) Comply with a standard of an alternative test method, upon obtaining the written approval from the Control Officer and the Administrator.

b. If no activity is occurring on an open storage pile and material handling or surface soils where support equipment and vehicles operate in association with such facility and if an open storage pile and material handling or surface soils where support equipment and vehicles operate in association with such facility contain more than one type of visibly distinguishable stabilization characteristics, soil, vegetation, or other characteristics, which are visibly distinguishable, the owner and/or operator shall test each representative surface separately for stability, in an area that represents a random portion of the overall disturbed conditions of the site, in accordance with the appropriate test methods described in Section 505 of this rule and in Appendix C-Fugitive Dust Test Methods of these rules.

307 **FUGITIVE DUST CONTROL MEASURES:** The owner and/or operator of a nonmetallic mineral processing plant and/or a rock product processing plant shall implement the fugitive dust control measures described in this section of this rule. When selecting a fugitive dust control measure(s), the owner and/or operator of a facility may consider the site-specific and/or material-specific conditions and logistics of a facility. When doing so, some fugitive dust control measures may be more reasonable to

implement than others. Regardless, any fugitive dust control measure that is implemented must achieve the applicable standard(s) described in Section 306 of this rule, as determined by the corresponding test method(s), as applicable, and must achieve other applicable standard(s) set forth in this rule. The owner and/or operator of a facility may submit a request to the Control Officer and the Administrator for the use of alternative control measure(s). The request shall include the proposed alternative control measure, the control measure that the alternative would replace, and a detailed statement or report demonstrating that the measure would result in equivalent or better emission control than the measures prescribed in this rule. Nothing in this rule shall be construed to prevent an owner and/or operator of a facility from making such demonstration. Following a decision by the Control Officer and the Administrator to grant the petition, the facility shall incorporate the alternative control measure in any required Dust Control Plan. When engaged in the activities described in Section 301 and Section 307.1 through Section 307.9 of this rule, the owner and/or operator of a facility shall install, maintain, and use fugitive dust control measures as described in Section 307.1 through Section 307.9 of this rule, as applicable.

307.1 Open Storage Piles and Material Handling: The owner and/or operator of a facility shall implement all of the following fugitive dust control measures, as applicable. For the purpose of this rule, open storage pile(s) and material handling does not include berms and guard rails that are installed to comply with 30 CFR 56.93000. However, such berms and guard rails shall be installed and maintained in compliance with Section 306.1, Section 306.2, and Section 306.5 of this rule.

a. Prior to, and/or while conducting loading and unloading operations, implement one of the following fugitive dust control measures:

(1) Spray material with water, as necessary; or

(2) Spray material with a dust suppressant other than water, as necessary.

b. When not conducting loading and unloading operations, implement one of the following fugitive dust control measures:

(1) Spray material with water, as necessary;

(2) Maintain a 1.5% or more soil moisture content of the open storage pile(s);

(3) Locate open storage pile(s) in a pit/in the bottom of a pit;

(4) Arrange open storage pile(s) such that storage pile(s) of larger diameter products are on the perimeter and act as barriers to/for open storage pile(s) that could create fugitive dust emissions;

(5) Construct and maintain wind barriers, storage silos, or a three-sided enclosure with walls, whose length is no less than equal to the length of

the pile, whose distance from the pile is no more than twice the height of the pile, whose height is equal to the pile height, and whose porosity is no more than 50%; or

(6) Cover open storage piles with tarps, plastic, or other material to prevent wind from removing the coverings.

c. When installing new open storage pile(s) at an existing facility and/or when installing new open storage pile(s) at a new facility, the owner and/or operator shall implement all of the following fugitive dust control measures, only if it is determined to be feasible on a case-by-case basis through the Dust Control Plan by assessing the amount of open land available at the property at the time the new open storage pile(s) are formed:

(1) Install the open storage pile(s) at least 25 feet from the property line; and

(2) Limit the height of the open storage pile(s) to less than 45 feet.

d. For existing open storage pile(s) and when installing open storage pile(s) for an existing facility or for a new facility, if such open storage pile(s) will be constructed over eight feet high and will not be covered, then the owner and/or operator shall install, use, and maintain a water truck or other method that is capable of completely wetting the surfaces of open storage pile(s).

307.2 Surface Stabilization Where Support Equipment and Vehicles Operate: The owner and/or operator of a facility shall implement one of the following fugitive dust control measures on areas other than the areas identified in Section 307.3 and Section 307.4 of this rule where loaders, support equipment, and vehicles operate.

a. Apply and maintain water;

b. Apply and maintain a dust suppressant, other than water; or

c. Apply a gravel pad in compliance with Section 307.6(b)(4) of this rule.

307.3 Haul/Access Roads That Are Not in Permanent Areas of a Facility:

a. The owner and/or operator of a facility shall implement one of the following fugitive dust control measures, as applicable, before engaging in the use of, or in the maintenance of, haul/access roads. Compliance with the provisions of this section of this rule shall not relieve any person subject to the requirements of this section of this rule from complying with any other federally enforceable requirements (i.e., a permit issued under Section 404 of the Clean Water Act).

(1) Install and maintain bumps, humps, or dips for speed control and apply water, as necessary;

(2) Limit vehicle speeds and apply water, as necessary;

(3) Pave;

(4) Apply and maintain a gravel pad in compliance with Section 307.6(b)(4) of this rule;

(5) Apply a dust suppressant, other than water; or

(6) Install and maintain a cohesive hard surface.

b. For a new facility, if it is determined that none of the fugitive dust control measures described in Section 307.3(a) of this rule can be technically and feasibly implemented, then the owner and/or operator of a new facility shall maintain a minimum distance of 25 feet from the property line for haul/access roads associated with the new facility. Such determination shall be made and approved in writing by the Control Officer and the Administrator and shall be approved in the Dust Control Plan.

307.4 On-Site Traffic:

a. The owner and/or operator of a facility shall require all batch trucks and material delivery trucks to remain on roads with paved surfaces or cohesive hard surfaces.

b. The owner and/or operator of a facility shall require all aggregate trucks to remain on paved surfaces or cohesive hard surfaces, except when driving on roads leading to and from aggregate loading areas/loading operations, as approved in the Dust Control Plan.

c. The owner and/or operator of a facility shall require all batch trucks and material delivery trucks to enter and exit the facility/operation only through entrances that comply with the trackout requirements in Section 307.6 of this rule.

d. The owner and/or operator of a facility shall pave or install a cohesive hard surface on permanent areas of a facility on which vehicles drive, as approved in the Dust Control Plan.

307.5 Off-Site Traffic: When hauling and/or transporting bulk material off-site, the owner and/or operator of a facility shall implement all of the following control measures:

a. Load all haul trucks such that the freeboard is not less than three inches;

b. Prevent spillage or loss of bulk material from holes or other openings in the cargo compartment's floor, sides, and/or tailgate(s); and

c. Cover haul trucks with a tarp or other suitable closure.

307.6 Trackout:

a. Rumble Grate and Wheel Washer: The owner and/or operator of a new permanent facility and the owner and/or operator of an existing permanent facility with a minimum of 60 aggregate trucks, mixer trucks, and/or batch trucks exiting a facility on any day onto paved public roadways/paved areas accessible to the public shall install, maintain, and use a rumble grate and wheel washer, in accordance with all of the following conditions, as applicable. For the purpose of this rule, a vehicle wash and/or a cosmetic wash may be substituted for a wheel washer, provided such vehicle wash and/or cosmetic wash has at least 40 pounds per square inch (psi) water spray from the nozzle (owner and/or operator of the facility shall have a water pressure gauge available on-site to allow verification of such water pressure), meets the definition of wheel washer (i.e., is capable of washing the entire circumference of each wheel of the vehicle), is operated in such a way that visible deposits are removed from the entire circumference of each wheel of the vehicle exiting the wash, is installed, maintained, and used in accordance with criteria in Section 307.6(a)(1)-(5) of this rule, and is approved in the Dust Control Plan for the facility.

(1) The owner and/or operator of a facility shall locate a rumble grate within 10 feet from a wheel washer.

(a) The rumble grate and wheel washer shall be located no less than 30 feet prior to each exit that leads to a paved public roadway/paved area accessible to the public and that is used by aggregate trucks, mixer trucks, and/or batch trucks.

(b) The owner and/or operator of a facility may be allowed to install a rumble grate and wheel washer less than 30 feet prior to each exit if the owner and/or operator of a facility can demonstrate to the Control Officer that there is not adequate space to install a rumble grate and wheel washer no less than 30 feet prior to each exit and that a rumble grate and wheel washer at a shorter distance will be adequate to prevent trackout.

(c) A rumble grate shall consist of raised dividers (rails, pipes, or grates) a minimum of three inches tall, six inches apart, and 20 feet long, to allow a vibration to be produced such that dust is shaken off the

wheels of a vehicle as the entire circumference of each wheel of the vehicle passes over the rumble grate.

(2) The owner and/or operator of a facility shall ensure that all aggregate trucks, mixer trucks, and/or batch trucks exit the facility via the rumble grate first and then the wheel washer.

(3) The owner and/or operator of a facility shall post a sign by the rumble grate and wheel washer to designate the speed limit as 5 miles per hour.

(4) The owner and/or operator of a facility shall pave the roads from the rumble grate and wheel washer to the facility exits leading to paved public roadways/paved areas accessible to the public.

(5) The owner and/or operator of a facility shall ensure that all aggregate trucks, mixer trucks, and/or batch trucks remain on the paved roads between the rumble grate and wheel washer and the facility exits leading to paved public roadways/paved areas accessible to the public.

b. Rumble Grate, Wheel Washer, or Truck Washer: The owner and/or operator of a facility not subject to Section 307.6(a) of this rule shall install, maintain, and use a rumble grate, wheel washer, or truck washer in accordance with all of the following:

(1) A rumble grate, wheel washer, or truck washer shall be located no less than 30 feet prior to each exit that leads to a paved public roadway/paved area accessible to the public and that is used by aggregate trucks, mixer trucks, and/or batch trucks.

(a) The owner and/or operator of a facility may be allowed to install a rumble grate, wheel washer, or truck washer less than 30 feet prior to each exit if the owner and/or operator of a facility can demonstrate to the Control Officer that there is not adequate space to install a rumble grate, wheel washer, or truck washer no less than 30 feet prior to each exit and that a rumble grate, wheel washer, or truck washer at a shorter distance will be adequate to prevent trackout.

(b) A rumble grate shall consist of raised dividers (rails, pipes, or grates) a minimum of three inches tall, six inches apart, and 20 feet long, to allow a vibration to be produced such that dust is shaken off the wheels of a vehicle as the entire circumference of each wheel of the vehicle passes over the rumble grate.

(2) The owner and/or operator of a facility shall ensure that all aggregate trucks, mixer trucks, and/or batch trucks exit the facility via a rumble grate, wheel washer, or truck washer.

(3) The owner and/or operator of a facility shall post a sign by the rumble grate, wheel washer, or truck washer to designate the speed limit as 5 miles per hour.

(4) If haul/access roads are unpaved between the rumble grate, wheel washer, or truck washer and the facility exits leading to paved public roadways/ paved areas accessible to the public, a gravel pad shall be installed, maintained, and used from the rumble grate, wheel washer, or truck washer to such paved public roadways/paved areas accessible to the public in accordance with all of the following:

(a) Gravel pad shall be designed with a layer of washed gravel, rock, or crushed rock that is at least one inch or larger in diameter and 6 inches deep, 30 feet wide, and 50 feet long and shall be flushed with water or completely replaced as necessary to comply with the trackout threshold described in Section 307.6(d) of this rule.

(b) Gravel pad shall have a gravel pad stabilizing mechanism/device (i.e., curbs or structural devices along the perimeter of the gravel pad) and shall be flushed with water or completely replaced as necessary to comply with the trackout threshold described in Section 307.6(d) of this rule.

c. Exemptions for Wheel Washers: The owner and/or operator of a facility shall not be required to install, maintain, and use a wheel washer, if any one of the following are applicable:

(1) A facility has all paved roads and meters aggregate or related materials directly to a ready-mix or hot mix asphalt truck, with the exception of returned products. The owner and/or operator of the facility shall install, maintain, and use a rumble grate in compliance with Section 307.6(b) of this rule.

(2) A facility is less than 5 acres in land size and handles recycled asphalt and recycled concrete exclusively. The owner and/or operator of the facility shall install, maintain, and use a rumble grate in compliance with Section 307.6(b) of this rule and shall install a gravel pad in compliance with Section 307.6(b)(4) of this rule on all unpaved roads leading to the facility exits leading to paved public roadways/paved areas accessible to the public.

(3) A facility has a minimum of ¼ mile paved roads leading from a rumble grate to the facility exits leading to paved public roadways/paved areas accessible to the public.

(4) A facility meets the definition of infrequent operations, as defined in Section 229 of this rule. The owner and/or operator of the facility shall install, maintain, and use a rumble grate in compliance with Section 307.6(b) of this rule and shall install a gravel pad in compliance with Section 307.6(b)(4) of this rule. The gravel pad shall be installed for a distance of no less than 100 feet from the rumble grate to the facility exits leading to paved public roadways/paved areas accessible to the public. The owner and/or operator of the facility shall keep records in accordance with Section 500 of this rule, as applicable. The owner and/or operator of the facility shall notify the Control Officer in the event that the facility will operate more than 52 days per year based on the average rolling 3-year period after June 8, 2005 and the owner and/or operator of the facility shall comply with Section 307.6 of this rule, as applicable.

d. Trackout Distance: An owner and/or operator of a facility shall not allow trackout to extend a cumulative distance of 25 linear feet or more from all facility exits onto paved areas accessible to the public. Notwithstanding the proceeding, the owner and/or operator of a facility shall clean up all other trackout at the end of the workday.

e. Cleaning Paved Roads Identified in the Dust Control Plan: The owner and/or operator of a facility shall clean all paved roads identified in the Dust Control Plan for a facility in accordance with all of the following as applicable:

(1) The owner and/or operator of a facility with a minimum of 60 aggregate trucks, mixer trucks, and/or batch trucks exiting the facility on any day shall sweep the paved roads with a street sweeper by the end of each production work shift, if there is evidence of dirt and/or other bulk material extending a cumulative distance of 12 linear feet or more on any paved road.

(2) The owner and/or operator of a facility with less than 60 aggregate trucks, mixer trucks, and/or batch trucks exiting the facility on any day shall sweep the paved roads with a street sweeper by the end of every other work day. On the days that paved roads are not swept, the owner and/or operator of a facility shall apply water on at least 100 feet of paved roads or the entire length of paved roads leading to an exit to paved public roadways/paved areas accessible to the public, if such roadways are less than 100 feet long.

(3) The owner and/or operator of a facility, who purchases street sweepers after June 8, 2005, shall purchase street sweepers that meet the criteria of PM_{10}-efficient South Coast Air Quality Management Rule 1186 certified street sweepers.

(4) The owner and/or operator of a new facility shall use South Coast Air Quality Management Rule 1186 certified street sweepers to sweep paved roads.

307.7 Pad Construction for Processing Equipment: The owner and/or operator of a facility shall implement, maintain, and use fugitive dust control measures during the construction of pads for processing equipment, so as to meet all of the applicable requirements in this rule, and shall identify, in the Dust Control Plan, such fugitive dust control measures.

307.8 Spillage: In addition to complying with the fugitive dust emission limitations described in Section 306 of this rule and implementing fugitive dust control measures described in Section 307.1 through Section 307.9 of this rule, as applicable, the owner and/or operator of a facility shall implement the following fugitive dust control measures, as applicable, when spillage occurs:

a. Promptly remove any pile of spillage on paved haul/access roads/paved roads; or

b. Maintain in a stabilized condition any pile of spillage on paved haul/access roads/paved roads and remove such pile by the end of each day; and

c. Maintain in a stabilized condition all other piles of spillage with dust suppressants until removal.

307.9 Nighttime Operations: The owner and/or operator of a facility shall implement, maintain, and use fugitive dust control measures at night, as approved in the Dust Control Plan.

308 FACILITY INFORMATION SIGN: The owner and/or operator of a facility subject to this rule shall erect and maintain a facility information sign at the main entrance such that members of the public can easily view and read the sign at all times. Such sign shall have a white background, have black block lettering that is at least four inches high, and shall contain at least all of the following information:

308.1 Facility name and permittee's name;

308.2 Current number of the air quality permit or of authority to operate under a general permit;

308.3 Name and local phone number of person(s) responsible for dust control matters; and

308.4 Text stating: "Dust complaints? Call Maricopa County Air Quality Department - (Insert the accurate Maricopa County Air Quality Department complaint line telephone number)."

309 FUGITIVE DUST CONTROL TECHNICIAN: The owner and/or operator of a facility with a rated or permitted capacity of 25 tons or more of material per hour or with five acres or more of disturbed surface area subject to a permit, whichever is greater, shall have in place a Fugitive Dust Control Technician, who shall meet all of the following qualifications:

309.1 Be authorized by the owner and/or operator of the facility to have full authority to ensure that fugitive dust control measures are implemented on-site and to conduct routine inspections, recordkeeping, and reporting to ensure that all fugitive dust control measures are installed, maintained, and used in compliance with this rule.

309.2 Be trained in accordance with the Comprehensive Dust Control Training Class conducted or approved by the Control Officer, successfully complete, at least once every three years, such Comprehensive Dust Control Training Class, and have a valid dust training certification identification card readily accessible on-site while acting as a Fugitive Dust Control Technician.

309.3 Be authorized by the owner and/or operator of the facility to install, maintain, and use fugitive dust control measures, deploy resources, and shutdown or modify activities as needed.

309.4 Be on-site at all times during primary dust-generating operations related to the purposes for which the permit was obtained.

309.5 Be certified to determine opacity as visible emissions in accordance with the provisions of the EPA Method 9 as specified in 40 CFR, Part 60, Appendix A.

309.6 Be authorized by the owner and/or operator of the facility to ensure that the site superintendent or other designated on-site representative of the owner and/or operator of the facility and water truck and water pull drivers for each site be trained in accordance with the Basic Dust Control Training Class conducted or approved by the Control Officer with jurisdiction over the site and successfully complete, at least once every three years, such Basic Dust Control Training Class.

310 BASIC DUST CONTROL TRAINING CLASS:

310.1 At least once every three years, the site superintendent or other designated on-site representative of the permit holder, if present at a site that has more than one acre of disturbed surface area that is subject to a permit issued by the Control Officer

requiring control of PM_{10} emissions from dust-generating operation, shall successfully complete a Basic Dust Control Training Class conducted or approved by the Control Officer.

310.2 At least once every three years, water truck and water-pull drivers shall successfully complete a Basic Dust Control Training Class conducted or approved by the Control Officer.

310.3 All persons having successfully completed training during the 2006 and 2007 calendar years shall be deemed to have satisfied the requirement to successfully complete the Basic Dust Control Training Class, if the training that was completed was conducted or approved by the Control Officer. Completion of the Comprehensive Dust Control Training Class, as required in Section 309.2 of this rule, shall satisfy the requirement of this section of this rule.

311 DUST CONTROL PLAN:

311.1 The owner and/or operator of a facility shall submit, to the Control Officer, a Dust Control Plan that describes all fugitive dust control measures to be implemented, in order to comply with Section 305.2, Section 306, Section 307, and Section 309 of this rule.

311.2 The owner and/or operator of a facility shall submit, to the Control Officer, a Dust Control Plan that describes all equipment associated with any process fugitive emissions to be implemented, in order to comply with Section 301 and Section 305.2 of this rule and that includes all of the information in Section 311.2(a) and Section 311.2(b) of this rule, as applicable. If an alternative plan for conducting required soil moisture tests is approved by the Control Officer, included in a Dust Control Plan, and implemented by the owner and/or operator, as allowed under Section 301.2(c)(6) of this rule, and if the Control Officer determines that such alternative plan included in a Dust Control Plan has been followed, yet fugitive dust emissions still exceed the standards of this rule, then the Control Officer shall issue a written notice to the owner and/or operator explaining such determination. The owner and/or operator shall make written revisions to the Dust Control Plan and shall submit such revised Dust Control Plan to the Control Officer within three working days of receipt of the Control Officer's written notice, unless such time period is extended by the Control Officer, upon request, for good cause. During the time that such owner and/or operator is preparing revisions to the Dust Control Plan, such owner and/or operator must still comply with all requirements of this rule.

a. Documentation for the soil moisture content in order to comply with Section 301.2 of this rule.

b. Documentation of soil moisture analysis for each move notice regarding portable sources.

311.3 The Dust Control Plan shall, in addition, contain all the information described in Rule 310-Fugitive Dust From Dust-Generating Operations of these rules.

311.4 All other criteria associated with the Dust Control Plan shall meet the criteria described in Rule 310-Fugitive Dust From Dust-Generating Operations of these rules.

311.5 The Control Officer shall approve, disapprove, or conditionally approve the Dust Control Plan, in accordance with the criteria used to approve, disapprove or conditionally approve a permit. Failure to comply with the provisions of an approved Dust Control Plan shall be deemed a violation of this rule.

311.6 With each move notice regarding portable sources, the owner and/or operator of a facility shall submit, to the Control Officer, a Dust Control Plan that meets the requirements of this section of this rule.

312 GENERAL REQUIREMENTS: An owner and/or operator of a facility subject to this rule shall be subject to the standards and/or requirements of this rule at all times. Failure to comply with any one of the following requirements shall constitute a violation.

312.1 Process emission limitations and controls described in Section 301, Section 302, and Section 303 of this rule.

312.2 Operation and maintenance (O&M) plan requirements for an emission control system and for dust control measures described in Section 305 of this rule.

312.3 Fugitive dust emission limitations described in Section 306 of this rule.

312.4 Fugitive dust control measures described in Section 307 of this rule.

312.5 Facility information sign requirement described in Section 308 of this rule.

312.6 Fugitive Dust Control Technician requirements described in Section 309 of this rule.

312.7 Basic Dust Control Training Class requirements described in Section 310.

312.8 Dust Control Plan requirements described in Section 311 of this rule.

312.9 Monitoring and recordkeeping requirements described in Section 500 of this rule.

312.10 Any other requirements of this rule.

SECTION 400 – ADMINISTRATIVE REQUIREMENTS

401 COMPLIANCE SCHEDULE: The newly amended provisions of this rule shall become effective upon adoption of this rule except as follows:

401.1 Process Controls: Process controls required by Section 301.2 of this rule shall be implemented by July 12, 2008.

401.2 O&M Plan:

a. The owner and/or operator of an existing facility shall revise/update all O&M Plans by June 12, 2008.

b. The Control Officer shall take final action on an O&M Plan revision/update to address the newly amended provisions of this rule within 30 calendar days of the filing of the complete O&M Plan revision/update. The Control Officer shall notify the applicant in writing of his approval or denial.

401.3 Dust Control Plan:

a. The owner and/or operator of an existing facility shall revise/update all Dust Control Plans by June 12, 2008.

b. The owner and/or operator of a new facility shall submit to the Control Officer a Dust Control Plan at the time such owner and/or operator submits a permit application to the Control Officer.

c. The Control Officer shall take final action on a Dust Control Plan revision/ update to address the newly amended provisions of this rule within 30 calendar days of the filing of the complete Dust Control Plan revision/update. The Control Officer shall notify the applicant in writing of his approval or denial.

401.4 Basic Dust Control Training Class: No later than December 31, 2008, a site superintendent or other designated on-site representative of the permit holder, water truck drivers, and water pull drivers shall have successfully completed the Basic Dust Control Training Class, as described in Section 310 of this rule.

401.5 Comprehensive Dust Control Training Class: No later than June 30, 2008, a Fugitive Dust Control Technician shall have successfully completed the Comprehensive Dust Control Training Class, as described in Section 309 of this rule.

401.6 Rumble Grates: As of June 12, 2008, new rumble grates or existing rumble grates that are moved or modified must meet the requirements described in Sections 307.6(a)(1)(c) or 307.6(b)(1)(b) of this rule.

SECTION 500 – MONITORING AND RECORDS

501 MONITORING, RECORDKEEPING AND REPORTING: Any owner and/or operator of a facility subject to this rule shall comply with the following requirements. Records shall be retained for five years and shall be made available to the Control Officer upon request.

501.1 Operational information required by this rule shall be kept in a complete and consistent manner on-site and be made available without delay to the Control Officer upon request.

501.2 Records of the following process and operational information, as applicable, are required:

a. General Data: Daily records shall be kept for all days that a facility is actively operating. Records shall include all of the following:

(1) Hours of operation;

(2) Type of batch operation (wet, dry, central);

(3) Throughput per day of basic raw materials including sand, aggregate, cement (tons/day);

(4) Volume of concrete produced per day (cubic yards/day) and volume of asphaltic concrete produced per day (tons/day);

(5) Volume of aggregate mined per day (tons per day); and

(6) Amount of each basic raw material including sand, aggregate, cement, fly ash delivered per day (tons/day).

(7) For facilities that assert to be below the thresholds in Section 307.6(a) and Section 307.6(e)(1) of this rule, number of aggregate trucks, mixer trucks, and/or batch trucks exiting the facility.

b. Additional Data for Dry Mix Concrete Plants and/or Bagging Operations: Records shall include all of the following:

(1) Number of bags of dry mix produced;

(2) Weight (size) of bags of dry mix produced;

(3) Kind and amount of fuel consumed in dryer (cubic feet/day or gallons/day); and

(4) Kind and amount of any back-up fuel, if any.

c. Control and Monitoring Device Data: Records shall include all of the following:

(1) For a fabric filter baghouse:

(a) Date of inspection;

(b) Date and designation of bag replacement;

(c) Date of service or maintenance related activities; and

(d) Time, date, and cause of fabric filter baghouse failure and/or down time, if applicable.

(2) For a scrubber:

(a) Date of service or maintenance related activities;

(b) Liquid flow rate;

(c) Other operating parameters that need to be monitored to assure that the scrubber is functioning properly and operating within design parameters; and

(d) Time, date, and cause of scrubber failure and/or down time, if applicable.

(3) For watering systems (e.g., spray bars or an equivalent control):

(a) Date, time, and location of each moisture sampling point; and

(b) Results of moisture testing.

501.3 O&M Plan Records: An owner and/or operator of a facility shall maintain all of the following records in accordance with an approved O&M Plan:

a. For Any ECS, Any Other Emission Processing Equipment, and Any ECS Monitoring Devices That Are Used Pursuant to This Rule or to an Air Pollution Control Permit:

(1) Periods of time that an approved ECS is operating to comply with this rule;

(2) Periods of time that an approved ECS is not operating;

(3) Flow rates;

(4) Pressure drops;

(5) Other conditions necessary to determine if the approved ECS is functioning properly;

(6) Results of visual inspections; and

(7) Correction action taken, if necessary.

b. For Equipment Associated With Any Process Fugitive Emissions and Any Fugitive Dust Control Measures that are Implemented to Comply With This Rule or to an Air Pollution Control Permit:

(1) A written record of self-inspection on each day that a facility is actively operating. Self-inspection records shall include daily inspections or in compliance with O&M Plan requirements, whichever is more frequent;

(2) Maintenance of street sweepers; and

(3) Maintenance of trackout control devices, gravel pads, wheel washers, and truck washers.

501.4 Dust Control Plan Records: An owner and/or operator of a facility shall compile, maintain, and retain a written record of self-inspection of all fugitive dust control measures implemented, in order to comply with the Dust Control Plan, on each day that the facility is actively operating. Self-inspection records shall include information as described in Rule 310-Fugitive Dust From Dust-Generating Operations of these rules.

501.5 Basic Dust Control Training Class Records: An owner and/or operator of a facility shall compile, maintain, and retain a written record for each employee subject to Section 310 of this rule. Such written records shall include the name of the employee, the date of the Basic Dust Control Training Class that such employee successfully completed, and the name of the agency/representative who conducted such class.

502 COMPLIANCE DETERMINATION – FOR PROCESS EMISSIONS AND CONTROLS: Compliance determinations for activities regulated by Sections 301 (excluding Section 301.1(e)), 302, and/or 303 of this rule shall be made according to the test methods for those subparts of 40 CFR Part 60, Appendix A, adopted as of July 1, 2007, as listed below. Such subparts of 40 CFR Part 60, Appendix A, adopted as of July 1, 2007 and 40 CFR Part 51, Appendix M, adopted as of July 1, 2007, are adopted by reference as indicated. This adoption by reference includes no future editions or amendments. Copies of test methods referenced in Section 502 of this rule are available

at Maricopa County Air Quality Department, 1001 North Central Avenue, Phoenix, Arizona, 85004-1942. When more than one test method is permitted for a compliance determination, then an exceedance of the limits established in this rule, determined by any of the applicable test methods, constitutes a violation of this rule.

502.1 Grain Loading: Particulate matter and associated moisture content shall be determined using the applicable EPA Reference Methods 1 through 5, 40 CFR Part 60, Appendix A.

502.2 Opacity Observations: Opacity observations to measure visible emissions from activities regulated by Sections 301 (excluding Section 301.1(e)), 302, and/or 303 of this rule shall be conducted in accordance with the techniques specified in EPA Reference Method 203B (Visual Determination of Opacity of Emissions from Stationary Sources for Time-Exception Regulations), 40 CFR Part 51, Appendix M, adopted as of July 1, 2007. Emissions shall not exceed the applicable opacity standards described in Section 301 (excluding Section 301.1(e)), Section 302, and Section 303 of this rule for a period aggregating more than three minutes in any 60-minute period.

502.3 Soil Moisture Testing for Watering Systems:

a. If twice daily moisture sampling is required, such sampling shall be conducted within one hour of startup and again at 3 pm or within one hour prior to daily shutdown but no less frequently than once every 8-hour period.

b. If daily moisture sampling is required, such sampling shall be conducted within one hour after startup.

c. Moisture testing shall be conducted on all crushers, shaker screens, and material transfer points (excluding wet plants). Unless prior approval from the Control Officer is granted, moisture testing shall be conducted at the following sample points:

(1) Within 10 feet from the point where crushed aggregate material is placed on the discharge belt conveyor from the crusher;

(2) Within 10 feet from the point where screened aggregate material is placed on the conveyor; and

(3) From each stacker point.

d. The number of sampling points identified in Section 502.3(c)(1) through (3) of this rule may be reduced, if the owner and/or operator of a facility complies with all of the following requirements:

(1) A 5% minimum moisture content, as demonstrated by a soil moisture test conducted in accordance with the test methods described in Section 502 of this rule, is maintained at the primary crusher;

(2) A minimum of 20 soil moisture samples are taken at all of the points identified in Section 502.3(c) of this rule;

(3) A 4% minimum moisture content, as demonstrated by a soil moisture test conducted in accordance with the test methods described in Section 502 of this rule and as demonstrated by the soil moisture samples required by Section 502.3(d)(2) of this rule, is maintained at all of the points identified in Section 502.3(c) of this rule; and

(4) A written request is submitted to and approved by the Control Officer to revise/modify the Dust Control Plan to reflect the change in moisture content and the reduced number of sampling points according to the demonstration made by the owner and/or operator of a facility according to this section of this rule.

e. Moisture testing is not required on a crusher and/or screen plant equipped with a baghouse or fabric filter, electrostatic precipitator, or wet scrubber, excluding wet spray bars, for control of particulate matter.

f. Moisture testing shall include all aggregate material less than 0.25 inch in diameter.

g. Moisture testing shall be conducted in accordance with the requirements of American Society For Testing And Materials C566-97 (2004) “Standard Test Method for Total Evaporable Moisture Content of Aggregate by Drying” with the exception that smaller sample portions may be used.

503 COMPLIANCE DETERMINATION FOR EMISSIONS AND CONTROLS THAT ARE REGULATED BY SECTION 301.1(E), SECTION 304 AND/OR SECTION 306 OF THIS RULE: To determine compliance with the fugitive dust emission limitations described in Section 301.1(e), Section 304, and/or Section 306 of this rule, opacity observations shall be conducted in accordance with the techniques specified in Appendix C-Fugitive Dust Test Methods of these rules.

504 COMPLIANCE DETERMINATION FOR SOIL MOISTURE CONTENT AND SOIL COMPACTION CHARACTERISTICS TEST METHODS ADOPTED BY REFERENCE:

504.1 ASTM Method D2216-05 ("Standard Test Method for Laboratory Determination of Water (Moisture) Content of Soil and Rock by Mass"), 2005 edition.

504.2 ASTM Method D1557-02e1 ("Test Method for Laboratory Compaction Characteristics of Soil Using Modified Effort (56,000 ft-lbf/ft^3 (2,700 kN-m/m^3))"), 2002 edition.

505 COMPLIANCE DETERMINATION FOR STABILIZATION STANDARDS TEST METHODS ADOPTED BY REFERENCE: The stabilization standards described in Section 306.5 of this rule shall be determined by using the following test methods in accordance with Appendix C-Fugitive Dust Test Methods of these rules:

505.1 Appendix C, Section 2.1.2 (Silt Content Test Method) of these rules to estimate the silt content of the trafficked parts of unpaved roads (not to exceed 6%) and unpaved parking lots (not to exceed 8%).

505.2 Appendix C, Section 2.3 (Test Methods for Stabilization-Soil Crust Determination (The Drop Ball Test)) of these rules for a soil crust.

505.3 Appendix C, Section 2.4 (Test Methods for Stabilization-Determination of Threshold Friction Velocity (TFV) (Sieving Field Procedure)) of these rules for threshold friction velocity (TFV) corrected for non-erodible elements of 100 cm/second or higher.

505.4 Appendix C, Section 2.5 (Test Methods for Stabilization-Determination of Flat Vegetative Cover) of these rules for flat vegetation cover (i.e., attached (rooted) vegetation or unattached vegetative debris lying on the surface with a predominant horizontal orientation that is not subject to movement by wind) that is equal to at least 50%.

505.5 Appendix C, Section 2.6 (Test Methods for Stabilization-Determination of Standing Vegetative Cover) of these rules for standing vegetation cover (i.e., vegetation that is attached (rooted) with a predominant vertical orientation) that is equal to or greater than 30%.

505.6 Appendix C, Section 2.6 (Test Methods for Stabilization-Determination of Standing Vegetative Cover) of these rules for standing vegetation cover (i.e., vegetation that is attached (rooted) with a predominant vertical orientation) that is equal to or greater than 10% and where the threshold friction velocity is equal to or greater than 43 cm/second when corrected for non-erodible elements.

505.7 Appendix C, Section 2.7 (Test Methods for Stabilization-Rock Test Method) of these rules for a percent cover that is equal to or greater than 10%, for non-erodible elements.

505.8 An alternative test method approved in writing by the Control Officer and the Administrator.

506 CERTIFIED STREET SWEEPING EQUIPMENT LIST ADOPTED BY REFERENCE: The list of street sweeping equipment (as of July 9, 2004) that has met the South Coast Air Quality Management Rule 1186 certification standards is found in support documents for the South Coast Air Quality Management District Regulation XI-Source Specific Standards, Rule 1186-PM_{10} Emissions From Paved And Unpaved Roads And Livestock Operations and is adopted by reference. A copy of the list of certified street sweeping equipment can also be obtained at Maricopa County Air Quality Department, 1001 North Central Avenue, Phoenix, Arizona, 85004.

REGULATION III – CONTROL OF AIR CONTAMINANTS

RULE 317
HOSPITAL/MEDICAL/INFECTIOUS WASTE INCINERATORS

INDEX

SECTION 100 – GENERAL

101 PURPOSE

102 APPLICABILITY

103 AVAILABILITY OF INFORMATION

SECTION 200 – DEFINITIONS

201 BATCH HMIWI

202 BIOLOGICALS

203 BLOOD PRODUCTS

204 BODY FLUIDS

205 CHEMOTHERAPEUTIC WASTE

206 CO-FIRED COMBUSTOR

207 CONTINUOUS HMIWI

208 CREMATORY

209 DIOXINS/FURANS

210 HOSPITAL

211 HOSPITAL/MEDICAL/INFECTIOUS WASTE INCINERATOR

212 HOSPITAL/MEDICAL/INFECTIOUS WASTE INCINERATOR OPERATOR

213 HOSPITAL WASTE

214 INFECTIOUS AGENT

215 INTERMITTENT HMIWI

216 LARGE HMIWI

217 LOW-LEVEL RADIOACTIVE WASTE

218 MAXIMUM CHARGE RATE

219 MAXIMUM DESIGN WASTE BURNING CAPACITY

220 MEDICAL/INFECTIOUS WASTE

221 MEDIUM HMIWI

222 PATHOLOGICAL WASTE

223 PYROLYSIS
224 SHUTDOWN
225 SMALL HMIWI

SECTION 300 – STANDARDS

301 HMIWI STANDARDS
302 HMIWI EMISSIONS GUIDELINES
303 OPACITY
304 LARGE HMIWI OPACITY
305 NIGHT BURNING
306 INCORPORATION BY REFERENCE
307 EXEMPTIONS

SECTION 400 – ADMINISTRATIVE REQUIREMENTS

401 COMPLIANCE SCHEDULE

SECTION 500 – MONITORING AND RECORDS

501 PROVIDING AND MAINTAINING MONITORING DEVICES
502 RECORDKEEPING AND REPORTING
503 HMIWI MONITORING REQUIREMENTS

Adopted 04/07/93
Revised 04/07/99
Revised 11/19/03
Revised 03/15/06
Revised 12/17/08
Revised 09/16/09
Revised 07/07/10

MARICOPA COUNTY
AIR POLLUTION CONTROL REGULATIONS
REGULATION III – CONTROL OF AIR CONTAMINANTS

RULE 317
HOSPITAL/MEDICAL/INFECTIOUS WASTE INCINERATORS

SECTION 100 – GENERAL

101 **PURPOSE:** To control emissions of air pollutants from Hospital/Medical/Infectious Waste incinerators.

102 **APPLICABILITY:** A Hospital/Medical/Infectious Waste Incinerator (HMIWI) commenced on or before June 20, 1996, or for which construction commenced on or before June 20, 1996, shall comply with this rule unless it fits any one of the following exceptions:

102.1 A combustor is not subject to this rule when only pathological waste, low-level radioactive waste, and/or chemotherapeutic waste is burned, provided the owner or operator of the combustor:

a. Notifies the Control Officer of an exemption claim; and

b. Keeps records on a calendar quarter basis of the periods of time when only pathological waste, low-level radioactive waste, and/or chemotherapeutic waste is burned.

102.2 Any co-fired combustor is not subject to this rule if the owner or operator of the co-fired combustor:

a. Notifies the Control Officer of an exemption claim; and

b. Provides an estimate of the relative weight of hospital waste, medical/infectious waste, and other fuels and/or wastes to be combusted; and

c. Keeps records on a calendar quarter basis of the weight of hospital waste and medical/infectious waste combusted, and the weight of all other fuels and wastes combusted at the co-fired combustor.

102.3 Any combustor required to have a permit under Title 42, United States Code (U.S.C.), Section 6925, Section 3005 of the Solid Waste Disposal Act is not subject to this rule.

102.4 Any combustor which meets the applicability requirements under 40 CFR 60, Subparts Cb, Ea, or Eb (standards or guidelines for certain municipal waste combustors) is not subject to this rule.

102.5 Any pyrolysis unit is not subject to this rule.

102.6 Cement kilns firing hospital waste or medical/infectious waste are not subject to this rule.

102.7 Physical or operational changes made to an existing HMIWI unit solely for the purpose of complying with emission guidelines under this rule are not considered a modification and do not result in an existing HMIWI unit becoming subject to the provisions of 40 CFR 60, Subpart Ec.

102.8 HMIWI subject to this Section are not subject to Rule 313.

a. A crematory whose incinerator burns only human remains is not a HMIWI and is not subject to this rule. It is subject to Rule 313. However, if the incinerator burns 10 percent or less of hospital waste and medical/infectious waste, it is a co-fired combustor subject only to notification and recordkeeping requirements, as specified in Section 102.2.c of this rule. If the incinerator burns more than 10 percent hospital waste and medical/infectious waste, it is subject to all of the requirements of this rule.

b. Any co-fired combustor or combustor that is not subject to this rule is still subject to Rule 313. (See Applicability, Sections 102.2, 102.3 and 102.4 of this rule.)

103 **AVAILABILITY OF INFORMATION:** Copies of the CFR referenced in this rule are available at the Maricopa County Air Quality Department, 1001 N. Central Ave., Phoenix, AZ, 85004, or by calling (602) 506-0169 for information.

SECTION 200 – DEFINITIONS: See Rule 100 of these rules for definitions of terms that are used but not specifically defined in this rule. For the purpose of this rule, the following definitions shall apply:

201 **BATCH HMIWI –** An HMIWI that is designed such that neither waste charging nor ash removal can occur during combustion.

202 **BIOLOGICALS –** Preparations made from living organisms and their products. This includes vaccines, cultures, etc., intended for use in diagnosing, immunizing, or treating humans or animals or in research.

203 **BLOOD PRODUCTS –** Any product derived from human blood, including, but not limited to, blood plasma, platelets, red or white blood corpuscles, and other derived licensed products, such as interferon, etc.

204 **BODY FLUIDS –** Liquid emanating or derived from humans and limited to blood; dialysate; amniotic, cerebrospinal, synovial, pleural, peritoneal and pericardial fluids; and semen and vaginal secretions.

205 **CHEMOTHERAPEUTIC WASTE –** Waste material resulting from the production or use of antineoplastic agents used for the purpose of stopping or reversing the growth of malignant cells.

206 **CO-FIRED COMBUSTOR –** A unit combusting hospital waste and/or medical/infectious waste with other fuels or wastes (e.g., coal, municipal solid waste) and subject to an enforceable requirement limiting the unit to combusting a fuel feed stream, 10 percent or less of the weight of which is comprised, in aggregate, of hospital waste and medical/infectious waste as measured on a calendar quarter basis. For purposes of this definition, pathological waste, chemotherapeutic waste, and low-level radioactive waste are considered "other" wastes when calculating the percentage of hospital waste and medical/infectious waste combusted.

207 **CONTINUOUS HMIWI –** An HMIWI that is designed to allow waste charging and ash removal during combustion.

208 **CREMATORY –** An incinerator used for the cremation of human and animal bodies, their body parts, and for the incineration of associated animal bedding.

209 **DIOXINS/FURANS –** The combined emissions of tetra-through octa-chlorinated dibenzo-para-dioxins and dibenzofurans, as measured by the EPA Reference Method 23, found in 40 CFR Part 60, Appendix A.

210 **HOSPITAL –** Any facility which has an organized medical staff, maintains at least six inpatient beds, and where the primary function of the institution is to provide diagnostic and therapeutic patient services and continuous nursing care primarily to human impatience who are not related and who stay on average in excess of 24 hours per admission. This definition does not include facilities maintained for the sole purpose of providing nursing or convalescent care to human patients who generally are not acutely ill but who require continuing medical supervision.

211 **HOSPITAL/MEDICAL/INFECTIOUS WASTE INCINERATOR OR HMIWI OR HMIWI UNIT –** Any device that combusts any amount of hospital waste or medical/infectious waste.

212 **HOSPITAL/MEDICAL/INFECTIOUS WASTE INCINERATOR OPERATOR OR HMIWI OPERATOR –** Any person who operates, controls or supervises the day-to-day operation of an HMIWI.

213 **HOSPITAL WASTE –** Discards generated at a hospital, except unused items returned to the manufacturer. The definition of hospital waste does not include human corpses, remains, and anatomical parts that are intended for interment or cremation.

214 **INFECTIOUS AGENT –** Any organism (such as a virus or bacteria) that is capable of being communicated by invasion and multiplication in body tissues and capable of causing disease or adverse health impacts in humans.

215 **INTERMITTENT HMIWI –** An HMIWI that is designed to allow waste charging, but not ash removal, during combustion.

216 **LARGE HMIWI:**

216.1 Except as provided in Section 216.2:

a. An HMIWI whose maximum design waste burning capacity is more than 500 pounds per hour; or

b. A continuous or intermittent HMIWI whose maximum charge rate is more than 500 pounds per hour; or

c. A batch HMIWI whose maximum charge rate is more than 4,000 pounds per day.

216.2 Each of the following is not a large HMIWI:

a. A continuous or intermittent HMIWI whose maximum charge rate is less than or equal to 500 pounds per hour; or

b. A batch HMIWI whose maximum charge rate is less than or equal to 4,000 pounds per day.

217 **LOW-LEVEL RADIOACTIVE WASTE –** Waste material which contains radioactive nuclides emitting primarily beta or gamma radiation, or both, in concentrations or quantities that exceed applicable federal or state standards for unrestricted release. Low-level radioactive waste is not high-level radioactive waste, spent nuclear fuel, or by-product material as defined by the Atomic Energy Act of 1954 (42 U.S.C. 2014(e)(2)).

218 **MAXIMUM CHARGE RATE:**

218.1 For continuous and intermittent HMIWI, 110 percent of the lowest 3-hour average charge rate measured during the most recent performance test demonstrating compliance with all applicable emission limits.

218.2 For batch HMIWI, 110 percent of the lowest daily charge rate measured during the most recent performance test demonstrating compliance with all applicable emission limits.

219 MAXIMUM DESIGN WASTE BURNING CAPACITY:

219.1 For intermittent and continuous HMIWI, $C = P_V \times 15{,}000/8{,}500$
Where:
C = HMIWI capacity, lb/hr
P_V = primary chamber volume, ft^3
15,000 = primary chamber heat release rate factor, $Btu/ft^3/hr$
8,500 = standard waste heating value, Btu/lb.

219.2 For batch HMIWI, $C = PV \times 4.5/8$
Where:
C = HMIWI capacity, lb/hr
PV = primary chamber volume, ft^3
4.5 = waste density, lb/ft^3
8 = typical hours of operation of a batch HMIWI.

220 MEDICAL/INFECTIOUS WASTE – Any waste generated in the diagnosis, treatment, or immunization of human beings or animals, in research, or in the production or testing of biologicals that is listed in Sections 220.1 through 220.7 of this rule. The definition of medical/infectious waste does not include hazardous waste identified or listed under the regulations in 40 CFR Part 261; household waste, as defined in 40 CFR 261.4(b)(1); ash from incineration of medical/infectious waste, once the incineration process has been completed; human corpses, remains, and anatomical parts that are intended for interment; cremation; and domestic sewage materials identified in 40 CFR 261.4(a)(1). Medical/infectious waste does include:

220.1 Cultures and stocks of infectious agents and associated biologicals, including: cultures from medical and pathological laboratories; cultures and stocks of infectious agents from research and industrial laboratories; wastes from the production of biologicals; discarded live and attenuated vaccines; and culture dishes and devices used to transfer, inoculate, and mix cultures.

220.2 Human pathological waste, including tissues, organs, and body parts and body fluids that are removed during surgery or autopsy, or other medical procedures, and specimens of body fluids and their containers.

220.3 Human blood and blood products including:

a. Liquid waste human blood;

b. Products of blood;

c. Items saturated and/or dripping with human blood; or

d. Items that were saturated and/or dripping with human blood that are now caked with dried human blood; including serum, plasma, and other blood components, and their containers, which were used or intended for use in

either patient care, testing and laboratory analysis or the development of pharmaceuticals. Intravenous bags are also included in this category.

220.4 Sharps that have been used in animal or human patient care or treatment or in medical, research, or industrial laboratories, including hypodermic needles, syringes (with or without the attached needle), pasteur pipettes, scalpel blades, blood vials, needles with attached tubing, and culture dishes (regardless of presence of infectious agents). Also included are other types of broken or unbroken glassware that were in contact with infectious agents, such as used slides and cover slips.

220.5 Animal waste including contaminated animal carcasses, body parts, and bedding of animals that were known to have been exposed to infectious agents during research (including research in veterinary hospitals), production of biologicals or testing of pharmaceuticals.

220.6 Isolation wastes including biological waste and discarded materials contaminated with blood, excretions, exudates, or secretions from humans who are isolated to protect others from certain highly communicable diseases, or isolated animals known to be infected with highly communicable diseases.

220.7 Unused sharps including the following unused, discarded sharps: hypodermic needles, suture needles, syringes, and scalpel blades.

221 MEDIUM HMIWI:

221.1 Except as provided in Section 221.2:

a. An HMIWI whose maximum design waste burning capacity is more than 200 pounds per hour but less than or equal to 500 pounds per hour; or

b. A continuous or intermittent HMIWI whose maximum charge rate is more than 200 pounds per hour but less than or equal to 500 pounds per hour; or

c. A batch HMIWI whose maximum charge rate is more than 1,600 pounds per day but less than or equal to 4,000 pounds per day.

221.2 The following are not medium HMIWI:

a. A continuous or intermittent HMIWI whose maximum charge rate is less than or equal to 200 pounds per hour or more than 500 pounds per hour; or

b. A batch HMIWI whose maximum charge rate is more than 4,000 pounds per day or less than or equal to 1,600 pounds per day.

222 PATHOLOGICAL WASTE – Waste material consisting of only human or animal remains, anatomical parts, and/or tissue, the bags/containers used to collect and transport the waste material, and animal bedding (if applicable).

223 **PYROLYSIS –** The endothermic gasification of hospital waste or medical/infectious waste using external energy.

224 **SHUTDOWN –** The period of time after all waste has been combusted in the primary chamber. For continuous HMIWI, shutdown shall commence no less than 2 hours after the last charge to the incinerator. For intermittent HMIWI, shutdown shall commence no less than 4 hours after the last charge to the incinerator. For batch HMIWI, shutdown shall commence no less than 5 hours after the high-air phase of combustion has been completed.

225 **SMALL HMIWI:**

225.1 Except as provided in Section 225.2:

a. An HMIWI whose maximum design waste burning capacity is less than or equal to 200 pounds per hour; or

b. A continuous or intermittent HMIWI whose maximum charge rate is less than or equal to 200 pounds per hour; or

c. A batch HMIWI whose maximum charge rate is less than or equal to 1,600 pounds per day.

225.2 The following are not small HMIWI:

a. A continuous or intermittent HMIWI whose maximum charge rate is more than 200 pounds per hour; or

b. A batch HMIWI whose maximum charge rate is more than 1,600 pounds per day.

SECTION 300 – STANDARDS

301 **HMIWI STANDARDS:** An existing HMIWI covered by this Section shall comply with 40 CFR 60, Subpart Ec, and all accompanying appendices, as modified by this subsection. 40 CFR 60, Subpart Ec "Standards of Performance for Hospital/Medical/Infectious Waste Incinerators for Which Construction is Commenced After June 20, 1996" is incorporated by reference in Rule 360 of the Maricopa County Air Pollution Control Regulations. Each owner or operator of an affected facility shall comply with the requirements of 40 CFR 60, Subpart Ec, as adopted and, where applicable, revised herein.

302 **HMIWI EMISSIONS GUIDELINES:** An HMIWI shall comply with the emissions guidelines listed in Table 317.1 below:

Table 317.1. Emission Limits for Small, Medium, and Large HMIWI.

Pollutant	Units (7% oxygen, dry basis)	Emission Limits (by HMIWI size)		
		Small	Medium	Large
Cadmium	Milligrams per dry standard	0.16 (0.07)	0.16 (0.07)	0.16 (0.07)

	cubic meter (grains per thousand dry standard cubic feet) or percent reduction	or 65%	or 65%	or 65%
Carbon monoxide	Parts per million by volume	40	40	40
Dioxins/furans	Nanograms per dry standard cubic meter total dioxins/furans (grains per billion dry standard cubic feet) or nanograms per dry standard cubic meter TEQ (grains per billion dry standard cubic feet)	125 (55) or 2.3 (1.0)	125 (55) or 2.3 (1.0)	125 (55) or 2.3 (1.0)
Hydrogen chloride	Parts per million by volume or percent reduction	100 or 93%	100 or 93%	100 or 93%
Lead	Milligrams per dry standard cubic meter (grains per thousand dry standard cubic feet) or percent reduction	1.2 (0.52) or 70%	1.2 (0.52) or 70%	1.2 (0.52) or 70%
Mercury	Milligrams per dry standard cubic meter (grains per thousand dry standard cubic feet) or percent reduction	0.55 (0.24) or 85%	0.55 (0.24) or 85%	0.55 (0.24) or 85%
Nitrogen oxides	Parts per million by volume	250	250	250
Particulate matter	Milligrams per dry standard cubic meter (grains per dry standard cubic foot)	115 (0.05)	69 (0.03)	34 (0.015)
Sulfur dioxide	Parts per million by volume	55	55	55

303 OPACITY: No owner or operator of an HMIWI shall cause to be discharged into the atmosphere from the stack of that HMIWI any gases that exhibit greater than 10 percent opacity (6-minute block average) or darker than 20 percent opacity for an aggregate of more than 30 seconds in any consecutive 60 minutes.

304 LARGE HMIWI OPACITY: A large HMIWI shall comply with the opacity requirements as specified in 40 CFR 60, Sections 60.52c(c), (d), and (e).

305 NIGHT BURNING: No person shall operate a medical waste incinerator between sunset and the following sunrise unless a continuous opacity (particulate) recorder is operating at all times when there is any combustion within the incinerator. Such recorder shall be in compliance with Section 501.1 of this rule.

306 INCORPORATION BY REFERENCE: All CFR references as of July 1, 2009 that are listed below and in various sections of this rule are adopted and incorporated by reference. These adoptions by reference include no future editions or amendments. Copies of these CFR references are available at the Maricopa County Air Quality Department, 1001 N. Central Ave., Phoenix, AZ, 85004, or by calling (602) 506-0169 for information.

40 CFR 60, Subpart Ec
40 CFR 60, Sections 60.52c(c), (d), and (e)
40 CFR 60, Section 60.56c
40 CFR 60, Section 60.57c
40 CFR 60, Sections 60.58c(b), (c), (d), (e), and (f)
40 CFR 60, Appendix A and Appendix B
40 CFR 70

SECTION 400 – ADMINISTRATIVE REQUIREMENTS

401 COMPLIANCE SCHEDULE: On the effective date of an EPA approved operating permit program under Clean Air Act Title V and the implementing regulations under 40 CFR 70 in Arizona, whichever date is later, designated facilities subject to this rule shall operate pursuant to a permit issued under the EPA-approved operating permit program.

SECTION 500 – MONITORING AND RECORDS

501 PROVIDING AND MAINTAINING MONITORING DEVICES: Except as provided in Section 502, all requirements for compliance and performance testing listed in 40 CFR 60.56c shall be required of each HMIWI, excluding the fugitive emissions testing requirements under Sections 60.56c(b)(12) and (c)(3).

501.1 Any person subject to Section 304 of this rule shall operate and maintain all of the following continuous data recording systems. All required systems shall be completely and properly operating during all periods of combustion within the incinerator, and each shall include a real-time recording device that creates a clear, legible record at all times of operation.

501.2 Opacity of stack emissions or other indicator of particulate matter which is approved by the Control Officer. Pursuant to Section 305 of this rule, any incinerator burning after sunset must be equipped with a continuously recording opacity monitor, regardless of capacity. The opacity monitor shall be located after (downstream of) all control equipment, prior to the stack exit, and prior to any dilution with ambient air. The opacity monitor shall at all times comply with the EPA Performance Specification 1 (40 CFR 60, Appendix B) and shall be calibrated no less than once each day.

502 RECORDKEEPING AND REPORTING: Each HMIWI shall comply with the requirements listed in 40 CFR 60.58c(b), (c), (d), (e), and (f), excluding 40 CFR 60.58c(b)(2)(ii) (fugitive emissions) and (b)(7) (siting).

503 HMIWI MONITORING REQUIREMENTS: An existing HMIWI shall comply with the monitoring requirements of 40 CFR 60.57c.

REGULATION III - CONTROL OF AIR CONTAMINANTS

RULE 318
APPROVAL OF RESIDENTIAL WOODBURNING DEVICES

INDEX

SECTION 100 - GENERAL

101 PURPOSE

102 APPLICABILITY

SECTION 200 - DEFINITIONS

201 APPROVED WOODBURNING DEVICE

202 FIREPLACE

203 MANUFACTURER

204 MASONRY HEATER

205 PELLET STOVE

206 RESIDENCE

207 SOLID FUEL

208 WOODSTOVE, WOODHEATER, OR CONVENTIONAL WOODSTOVE

SECTION 300 - STANDARDS

301 DESCRIPTION OF RESIDENTIAL DEVICES APPROVED FOR BURNING WOOD

302 REQUIRED INFORMATION FOR MASONRY HEATERS AND ANY OTHER RESIDENTIAL SOLID FUEL BURNING DEVICES

SECTION 400 - ADMINISTRATIVE REQUIREMENTS (NOT INCLUDED)

SECTION 500 - MONITORING AND RECORDS (NOT INCLUDED)

Adopted 10/05/94
Revised 04/21/99

MARICOPA COUNTY
AIR POLLUTION CONTROL REGULATIONS

REGULATION III - CONTROL OF AIR CONTAMINANTS

RULE 318
APPROVAL OF RESIDENTIAL WOODBURNING DEVICES

SECTION 100 - GENERAL

101 PURPOSE: Rule 318 describes the standards for approval of residential woodburning devices.

102 APPLICABILITY: Rule 318 applies to the approval of residential woodburning devices that may be exempted from the restrictions established by the Residential Woodburning Restriction Ordinance.

SECTION 200 - DEFINITIONS: For the purpose of this rule, the following definitions shall apply:

201 APPROVED WOODBURNING DEVICE - The following residential devices shall be approved woodburning devices, even though such devices may burn a solid fuel other than wood:

201.1 A device that has been certified by the Environmental Protection Agency (EPA) as conforming to Phase II EPA Standards for Wood Heaters in 40 Code of Federal Regulations (CFR) 60, Subpart AAA as amended through July 1, 1998.

201.2 Any pellet stove.

201.3 Any gas burning hearth appliances, including a dedicated gas logset permanently installed in any kind of woodburning fireplace.

201.4 Any masonry heater or any other solid fuel burning device that meets performance standards that are equivalent to the standards in 40 CFR 60, Subpart AAA as amended through July 1, 1998, and that is approved by the Control Officer and the Administrator of EPA.

202 FIREPLACE - A chimney-connected, solid fuel or gas burning appliance, with or without glass doors, that is intended primarily for occasional recreational and aesthetic use and only secondarily for incidental or supplemental heating and that ordinarily is permanently installed into the structure of a building.

203 MANUFACTURER - Any person who constructs or imports a residential woodburning device or parts for a residential woodburning device.

204 MASONRY HEATER - A vented, woodburning radiant heating system that is designed to burn rapidly and to capture and store the resultant heat energy in the mass of the appliance through internal heat exchange flue channels. A masonry heater is constructed primarily of masonry materials (brick, stone, tile, concrete, mortar, or refractory), weighs at least 1,754 lbs (800 kgs.), and is either site built or assembled from factory made components.

205 PELLET STOVE - A safety listed appliance, such as an appliance that has been tested in an accredited laboratory (i.e., UL, Warnock Hersey), designed to burn only wood pellets or any naturally pelleted fuel, such as but not limited to, cherry pits, corn, or olive pits. A pellet stove is incapable of burning wood and may or may not be certified under 40 CFR 60.530.

206 RESIDENCE - A residence shall be deemed to include single and multiple dwellings, hotels, motels, dormitories, and mobile homes, and the use of a room or group of rooms for the living, sleeping, and housekeeping activities of persons on a permanent or semi-permanent basis.

207 SOLID FUEL - Includes, but is not limited to, wood, nongaseous fuel, nonliquid fuel, oil, natural gas, electricity, liquid petroleum (LP) gas, and propane.

208 WOODSTOVE, WOODHEATER, OR CONVENTIONAL WOODSTOVE - A wood heating appliance, either free-standing or inserted into a fireplace, belonging to a model line that is not an EPA-certified model line. A woodstove, woodheater, or conventional woodstove does not include a barbecue device, a cookstove, a boiler, nor a furnace, as defined in 40 CFR 60.530(c).

SECTION 300 - STANDARDS

301 DESCRIPTION OF RESIDENTIAL DEVICES APPROVED FOR BURNING WOOD: Effective September 30, 1994, the following residential devices shall be approved for burning wood, even though such devices may burn a solid fuel other than wood:

301.1 A device that has been certified by EPA as conforming to Phase II EPA Standards for Wood Heaters in 40 CFR 60, Subpart AAA as amended through July 1, 1998.

301.2 Any pellet stove.

301.3 Any gas burning hearth appliances, including a dedicated gas logset permanently installed in any kind of woodburning fireplace.

301.4 Any masonry heater or any other solid fuel burning device that meets performance standards that are equivalent to the standards in 40 CFR 60, Subpart AAA as amended through July 1, 1998, and that is approved by the Control Officer and the Administrator of EPA.

302 REQUIRED INFORMATION FOR MASONRY HEATERS AND ANY OTHER RESIDENTIAL SOLID FUEL BURNING DEVICES: The manufacturer, operator,

and/or installer of any device described in subsection 301.4 of this rule shall provide to the Control Officer:

302.1 An affidavit that attests that the device has been certified by another air pollution control agency, provided the certification procedures and testing protocols used by that agency are determined by the Control Officer and the Administrator of EPA to be substantially equivalent to the certification procedures and testing protocols used by the Northern Sonoma County Air Pollution Control District; and

302.2 All other information determined by the Control Officer and the Administrator of EPA to be needed for an adequate evaluation of the device.

REGULATION III - CONTROL OF AIR CONTAMINANTS

RULE 319
GINNING OPERATIONS

INDEX

SECTION 100 - GENERAL

101 PURPOSE

102 APPLICABILITY

SECTION 200 - DEFINITIONS

201 EMISSION CONTROL SYSTEM (ECS)

202 EMISSIONS UNIT

203 GINNING OPERATION

204 HIGH EFFICIENCY CYCLONE

205 LINT HANDLING SYSTEMS EXHAUST

206 SEED COTTON HANDLING AND TRASH SYSTEMS EXHAUST

SECTION 300 - STANDARDS

301 LIMITATIONS - OPACITY/GENERAL

302 CONTROLS REQUIRED

303 REQUIREMENTS FOR AIR POLLUTION CONTROL EQUIPMENT

304 TRASH HOPPER DUMPING

SECTION 400 - ADMINISTRATIVE REQUIREMENTS

401 CONTROL EQUIPMENT COMPLIANCE SCHEDULE

SECTION 500 - MONITORING AND RECORDS

501 RECORDKEEPING AND REPORTING

502 COMPLIANCE DETERMINATION

503 TEST METHODS ADOPTED BY REFERENCE

Adopted 4/07/99
Revised 11/19/03

MARICOPA COUNTY

AIR POLLUTION CONTROL REGULATIONS

REGULATION III - CONTROL OF AIR CONTAMINANTS

RULE 319
GINNING OPERATIONS

SECTION 100 - GENERAL

101 PURPOSE: To limit the discharge of particulate matter from ginning operations by establishing emission and control standards.

102 APPLICABILITY: This rule applies to all new, existing and modified ginning operations.

SECTION 200 - DEFINITIONS: See Rule 100 (General Provisions and Definitions) of these rules for definitions of terms that are used but not specifically defined in this rule. For the purposes of this rule the following definitions shall apply:

201 EMISSION CONTROL SYSTEM (ECS) - A system for reducing emissions of particulates, consisting of both collection and control devices which are approved in writing by the Control Officer and are designed and operated in accordance with good engineering practices.

202 EMISSIONS UNIT - Any part of a stationary source which emits or would have the potential to emit any regulated air pollutant. Each piece of equipment shall be considered a single emissions unit for the purpose of this rule.

203 GINNING OPERATION - Any facility or plant that processes raw harvested seed cotton by separating fiber from the seed, removes trash from both seed cotton and ginned fiber, and packages the cotton fiber into bales.

204 HIGH EFFICIENCY CYCLONE - Any cyclone type collector of the 2D-2D or 1D-3D configuration, designations referring to the ratio of cylinder length to cone length, where D is the diameter of the cylinder portion. A 2D-2D cyclone has a body and cone length that are twice as long as the cyclone diameter. A 1D-3D cyclone has a body that is the same length as the diameter but the cone length is three times the diameter.

205 LINT HANDLING SYSTEMS EXHAUST - The exhaust air systems at a cotton gin that handle air from the cotton lint handling system, battery condenser and mote handling systems.

205 SEED COTTON HANDLING AND TRASH SYSTEM EXHAUST - The exhaust cotton handling air systems located at a cotton gin that are not defined as "lint handling systems exhaust

SECTION 300 - STANDARDS

301 LIMITATIONS - OPACITY/GENERAL: No person shall discharge into the ambient air from any ginning operation any air contaminant, other than uncombined water, in excess of 20 percent opacity.

302 CONTROLS REQUIRED: An owner or operator shall perform the following:

302.1 Control each unit that is fed by seed-cotton unloading, first seed-cotton cleaning and master trash systems with an ECS that includes a 1D-3D cyclone or equivalent device with at least a 95% efficiency.

302.2 Effective April 7, 2004, control the remaining seed cotton handling and trash exhaust emission units with an ECS that includes a 1D-3D cyclone or equivalent device with at least a 95% efficiency.

302.3 Effective April 7, 2004, control all lint handling exhaust emissions units with an ECS that includes at least a 2D-2D cyclone or equivalent device with at least a 90% efficiency.

303 REQUIREMENTS FOR AIR POLLUTION CONTROL EQUIPMENT

303.1 Operation And Maintenance (O&M) Plan Requirements For ECS:

a. An owner or operator shall provide and maintain (an) O&M Plan (s) for any ECS, any other emission processing equipment, and any ECS monitoring devices that are used pursuant to this rule or to an air pollution control permit.

b. The owner or operator shall submit to the Control Officer for approval the O&M Plans of each ECS and each ECS monitoring device that is used pursuant to this rule.

303.2 Providing And Maintaining ECS Monitoring Devices: An owner or operator operating an ECS pursuant to this rule shall install, maintain and calibrate monitoring devices described in the O&M Plan. The monitoring devices shall measure pressures, rates of flow and/or other operating conditions necessary to determine if the control devices are functioning properly.

303.3 O&M Plan Responsibility: An owner or operator of a facility that is required to have an O&M Plan pursuant to subsection 303.1 must fully comply with all O&M Plans that the owner or operator has submitted for approval, but which have not yet been approved, unless notified otherwise by the Control Officer in writing.

304 TRASH HOPPER DUMPING: Any owner or operator shall dump trash into a hopper that must utilize an enclosure with a minimum of two sides in order to minimize fugitive emissions. The sides of the enclosure shall prevent wind dispersion by ensuring that the height of the enclosure extends above the opening of the dumping device. If an auger is used to transport the trash into a hopper, the open end of the auger or auger sleeve shall be below the top of the enclosure.

SECTION 400 - ADMINISTRATIVE REQUIREMENTS

401 CONTROL EQUIPMENT COMPLIANCE PLAN SCHEDULE: Any owner or operator who has not complied with Section 300 of this rule by April 7, 1999 shall submit to the Control Officer:

a. A notice of intent to achieve compliance with this rule no later than October 4,1999.

b. A compliance plan, following the intent of notice, that specifies anticipated dates for completing increments of progress in the plan. At a minimum this plan shall include a design scheme, actual date that the equipment was ordered or purchased, anticipated delivery date, installation schedule and anticipated start-up dates and starting dates. The Control Officer may require a person submitting a compliance plan to submit subsequent reports on progress in achieving compliance.

c. No later than 180 days after the control equipment is considered to be in compliance with this rule, the owner or operator shall file the O&M Plan, as stated in Section 303 of this rule, with the Control Officer.

SECTION 500 - MONITORING AND RECORDS

501 RECORDKEEPING AND REPORTING: The owner or operator subject to this rule shall comply with the following record requirements. These records shall be kept for a period of five (5) years.

501.1 Process Records: For each day of operation, the owner or operator shall record the total hours during which a ginning operation was conducted, the number of bales of cotton produced and the total weight of all bales produced.

501.2 ECS O & M Plan Records: An owner or operator shall maintain a record of the periods of time that an approved ECS is used to comply with this rule. Key system parameters such as fan static pressures, visible emission checks and other variable parameters necessary to determine if the control equipment is functioning properly shall be recorded in accordance with the approved O&M Plan. The records shall account for any periods when the control system was not operating. The owner or operator shall also maintain records of all maintenance performed according to the O&M Plan. The results of the visual inspection, and any corrective action taken if necessary, shall also be recorded.

502 COMPLIANCE DETERMINATIONS: The owner or operator shall conduct maintenance evaluations of the control device to ensure continuing proper flow through the collection system. This evaluation shall consist of all of the following:

502.1 An initial baseline study of the entire dust collection system to determine if the system is properly balanced to ensure maximum particulate matter collection efficiency. This evaluation shall be made prior to October 1999 following the adoption of the rule. If this initial baseline study shows that any of the systems are not properly balanced then a subsequent baseline study shall be made of the system or systems after the system or systems have been modified. The baseline study shall be conducted using EPA Method 2, as incorporated by reference in section 503.1(b). During the baseline study, the inlet velocity, fan static pressure downstream of each fan, and the cyclone pressure drop at local conditions shall also be determined and recorded for reference. The baseline study shall be performed under unloaded conditions. The cyclones shall be operated at +/- 20% of the design gas velocity at local conditions. The design velocity is 2,700 to 3,600 ft./min. for 2D-2D cyclones and 2,800 to 3,600 ft./min. for 1D-3D cyclones. Equivalent systems shall establish alternate baseline parameters through performance testing that are approved by the Control Officer in writing.

502.2 Weekly checks referenced to the established baseline parameters shall be made to ensure that the control system is operating within +/- 20% of

the designed inlet velocity range at local conditions. These checks shall be made by direct static pressure measurements at each fan using a manometer, velometer or other equivalent measuring device approved by the Control Officer at the same sample ports that were used in the baseline study.

502.3 Visual checks of the ECS for leaks, holes and excessive visible emissions shall be conducted and recorded during each day of operation.

503 TEST METHODS ADOPTED BY REFERENCE: The Environmental Protection Agency (EPA) test methods, as they exist in the Code of Federal Regulations, adopted as of July 1, 2002, as listed below, are adopted by reference. These adoptions by reference include no future editions or amendments. Copies of test methods referenced in section 503.1 are available at the Maricopa County Environmental Services Department, Suite 201, 1001 North Central Avenue, Phoenix, AZ, 85004-1942.

503.1 Test Methods:

a. Opacity Determination: The opacity determinations shall be conducted in accordance with the techniques specified in EPA Reference Method 9, 40 CFR Part 60, Appendix A.

b. Velocity And Volumetric Flow Rate: The velocity and volumetric flow rate shall be determined according to EPA Reference Method 2, 40 CFR Part 60, Appendix A.

c. Particulate Emissions: The amount of particulate matter shall be determined according to EPA Reference Method 5, 40 CFR Part 60, Appendix A.

d. Sample and Velocity Traverses for Stationary Sources: The sample and velocity traverses shall be determined according to EPA Reference Method (s)1 40 CFR Part 60, Appendix A.

REGULATION III - CONTROL OF AIR CONTAMINANTS

RULE 320
ODORS AND GASEOUS AIR CONTAMINANTS

INDEX

SECTION 100 - GENERAL

101 PURPOSE

SECTION 200 - DEFINITIONS

201 HIGH SULFUR OIL

202 LOW SULFUR OIL

203 ODORS

204 REDUCTION

SECTION 300 - STANDARDS

301 ANIMAL AND VEGETABLE MATTER REDUCTION

302 MATERIAL CONTAINMENT REQUIRED

303 REASONABLE STACK HEIGHT REQUIRED

304 LIMITATION - HYDROGEN SULFIDE

305 PERMIT CONDITIONS-HIGH SULFUR OIL

306 LIMITATION - SULFUR FROM INDUSTRIES

307 OPERATING REQUIREMENTS - ASPHALT KETTLES AND DIP TANKS

SECTION 400 - ADMINISTRATIVE REQUIREMENTS (NOT APPLICABLE)

SECTION 500 - MONITORING AND RECORDS (NOT APPLICABLE)

Revised 07/13/88
Revised 07/02/03

MARICOPA COUNTY

AIR POLLUTION CONTROL REGULATIONS

REGULATION III - CONTROL OF AIR CONTAMINANTS

RULE 320
ODORS AND GASEOUS AIR CONTAMINANTS

SECTION 100 - GENERAL

101 PURPOSE: To limit the emissions of odors and other gaseous air contaminants into the atmosphere.

SECTION 200 - DEFINITIONS: For the purpose of this rule, the following definitions shall apply:

201 HIGH SULFUR OIL - Fuel oil containing 0.05 percent or more by weight of sulfur.

202 LOW SULFUR OIL - Fuel oil containing less than 0.05 percent by weight of sulfur.

203 ODORS - Smells, aromas or stenches commonly recognized as offensive, obnoxious or objectionable to a substantial part of a community.

204 REDUCTION - Any heated process, including rendering, cooking, drying, dehydrating, digesting, evaporating and protein concentrating.

SECTION 300 - STANDARDS: No person shall emit gaseous or odorous air contaminants from equipment, operations or premises under his control in such quantities or concentrations as to cause air pollution.

301 ANIMAL AND VEGETABLE MATTER REDUCTION: No person shall operate or use any machine, equipment or other contrivance for the reduction of animal or vegetable matter, separately or in combination, unless all gases, vapors and gas-entrained effluents have been incinerated to destruction at a temperature of not less than 1,300 degrees fahrenheit or processed in a manner determined by the Control Officer to be equally or more effective for the control of air pollution.

302 MATERIAL CONTAINMENT REQUIRED: Materials including, but not limited to, solvents or other volatile compounds, paints, acids, alkalies, pesticides, fertilizer and manure shall be processed, stored, used and transported in such a

manner and by such means that they will not unreasonably evaporate, leak, escape or be otherwise discharged into the ambient air so as to cause or contribute to air pollution. Where means are available to reduce effectively the contribution to air pollution from evaporation, leakage or discharge, the installation and use of such control methods, devices or equipment shall be mandatory.

303 REASONABLE STACK HEIGHT REQUIRED: Where a stack, vent or other outlet is at such a level that air contaminants are discharged to adjoining property, the Control Officer may require the installation of abatement equipment or the alteration of such stack, vent, or other outlet to a degree that will adequately dilute, reduce or eliminate the discharge of air contaminants to adjoining property.

304 LIMITATION - HYDROGEN SULFIDE: No person shall emit hydrogen sulfide from any location in such a manner or amount that the concentration of such emissions into the ambient air at any occupied place beyond the premises on which the source is located exceeds 0.03 parts per million by volume for any averaging period of 30 minutes or more.

305 PERMIT CONDITIONS - HIGH SULFUR OIL: Any permit issued for the operation of an existing source, or any renewal or modification of such a permit, shall include a condition prohibiting the use of high sulfur oil by the permittee. The applicant must demonstrate to the Control Officer that sufficient quantities of low sulfur oil are not available for use by the source and that it has adequate facilities and contingency plans to insure that the sulfur dioxide ambient air quality standards set forth in Rule 510 of these Regulations will not be violated. The terms of the permit may authorize the use of high sulfur oil under such conditions as are justified. In cases where the permittee is authorized to use high sulfur oil, it shall submit to the Control Officer monthly reports detailing its efforts to obtain low sulfur oil. When the conditions justifying the use of high sulfur oil no longer exist, the permit shall be modified accordingly.

306 LIMITATION - SULFUR FROM OTHER INDUSTRIES: No person shall discharge into the atmosphere from any industry, reduced sulfur, which includes sulfur equivalent from all sulfur emissions including but not limited to sulfur dioxide, sulfur trioxide and sulfuric acid, in excess of ten percent of the sulfur entering the process as feed.

307 OPERATING REQUIREMENTS - ASPHALT KETTLES AND DIP TANKS:

307.1 No person shall operate an asphalt kettle or dip tank unless the owner or operator controls air contaminant emissions by good modern practices, including but not limited to:

a. Maintenance of temperature below both the asphalt flash point and the maximum temperature recommended by the asphalt manufacturer through the use of automatic temperature controls.

b. Operation of the kettle or dip tank with the lid closed except when charging.

c. Pumping or drawing the asphalt through cocks without dipping.

d. Firing of the kettle or dip tank with a clean burning fuel.

e. Maintaining the kettle or dip tank in clean, properly adjusted and good operating condition.

307.2 The visible emissions from the operation of an asphalt kettle or dip tank shall comply with the provisions of Rule 300.

REGULATION III – CONTROL OF AIR CONTAMINANTS

RULE 321
MUNICIPAL SOLID WASTE LANDFILLS

INDEX

SECTION 100 – GENERAL

101 PURPOSE

102 APPLICABILITY

103 AVAILABILITY OF INFORMATION

SECTION 200 – DEFINITIONS

201 ADMINISTRATOR

202 AFFECTED FACILITY

203 COMMENCED

204 CONSTRUCTION

205 MODIFICATION

206 MUNICIPAL SOLID WASTE LANDFILL (MSW LANDFILL)

207 NMOC

208 OWNER OR OPERATOR

SECTION 300 – STANDARDS

301 STANDARDS OF PERFORMANCE FOR MSW LANDFILLS

302 DELAYED APPLICABILITY

SECTION 400 – ADMINISTRATIVE REQUIREMENTS (NOT APPLICABLE)

SECTION 500 – MONITORING AND RECORDS (NOT APPLICABLE)

Adopted 05/14/97; Revised 03/01/00; Revised 03/07/01; Revised 11/19/03; Revised 03/15/06; Revised 12/17/08; Revised 09/16/09; Revised 07/07/10; Revised 08/17/11; Revised 07/25/12; and **Revised March 26, 2014.**

MARICOPA COUNTY
AIR POLLUTION CONTROL REGULATIONS
REGULATION III – CONTROL OF AIR CONTAMINANTS

RULE 321
MUNICIPAL SOLID WASTE LANDFILLS

SECTION 100 – GENERAL

101 **PURPOSE:** To limit the emission of nonmethane organic compounds from municipal solid waste landfills.

102 **APPLICABILITY:** The provisions of this rule shall apply to each municipal solid waste landfill for which construction, reconstruction, or modification commenced prior to May 30, 1991, and which has accepted waste at any time since November 8, 1987, or has additional design capacity available for future waste deposition.

103 **AVAILABILITY OF INFORMATION:** Copies of 40 CFR 60, Subpart WWW are available electronically at: ecfr.gpoaccess.gov; at the Maricopa County Air Quality Department, 1001 N. Central Ave., Suite 125, Phoenix, AZ, 85004; or by calling (602) 506-6010 for information. ASTM standards are available from ASTM International, 100 Barr Harbor Drive, P.O. Box C700, West Conshohocken, PA 19428, or from its website at www.astm.org.

SECTION 200 – DEFINITIONS: See Rule 100 of these rules for definitions of terms that are used but not specifically defined in this rule. For the purpose of this rule, the following definitions shall apply, in addition to those definitions found in Rule 100 (General Provisions and Definitions) of these rules. In the event of any inconsistency between any of the Maricopa County air pollution control rules, the definitions in this rule take precedence.

201 **ADMINISTRATOR –** The Control Officer, except that the Control Officer shall not be empowered to approve alternative or equivalent test methods.

202 **AFFECTED FACILITY –** Any municipal solid waste landfill to which this rule is applicable.

203 **COMMENCED –** State or condition where an owner or operator has undertaken a continuous program of construction; or where an owner or operator has entered into a contractual obligation to undertake and complete such a program.

204 **CONSTRUCTION –** The fabrication, erection, or installation of an affected facility.

205 **MODIFICATION –** Any physical change in, or change in the method of operation of, an affected facility which would result in a change in actual emissions.

206 **MUNICIPAL SOLID WASTE LANDFILL (MSW LANDFILL) –** An entire, publicly or privately owned, disposal facility in a contiguous geographical space where household waste is placed in or on land. Portions of a MSW landfill may be separated by access roads.

207 **NMOC –** Nonmethane organic compound.

208 **OWNER OR OPERATOR –** Any person who owns, leases, operates, controls, or supervises an affected facility.

SECTION 300 – STANDARDS

301 **STANDARDS OF PERFORMANCE FOR MSW LANDFILLS** The federal standards of performance for municipal solid waste landfills set forth in 40 CFR 60, Subpart WWW adopted as of July 1, 2013, and all accompanying appendices, excluding 40 CFR 60.750, are adopted and incorporated by reference with the amendments and revisions set forth in this section. This adoption by reference includes no future editions or revisions. Each owner or operator of an affected facility shall comply with the requirements of 40 CFR 60, Subpart WWW as adopted and, where applicable, revised herein.

301.1 **Collection and Control System Design Plan:** 40 CFR 60.752(b)(2)(i) is amended to read: "Submit a collection and control design plan prepared by a professional engineer to the Administrator for approval not later than 12 months after submittal of the initial NMOC emission rate report."

301.2 **Design Capacity Report:** 40 CFR 60.757(a) is amended to read "Each owner or operator of an affected facility shall submit an initial design capacity report to the Administrator within 90 days from May 14, 1997." 40 CFR 60.757(a)(1) is deleted.

301.3 **NMOC Emission Rate Report:** 40 CFR 60.757(b) is amended to read "Each owner or operator of an affected facility shall submit an NMOC emission rate report to the Administrator initially and annually thereafter, except as provided for in paragraphs (b)(1)(ii) or (b)(3) of this section. The Administrator may request such additional information as may be necessary to verify the reported NMOC emission rate." 40 CFR 60.757(b)(1)(i) is amended to read: "The initial NMOC emission rate report shall be submitted within 90 days from May 14, 1997 and may be combined with the initial design capacity report required in paragraph (a) of this section. Subsequent NMOC emission rate reports shall be submitted annually thereafter, except as provided for in paragraphs (b)(1)(ii) and (b)(3) of this section."

302 **DELAYED APPLICABILITY:** For an affected facility that first becomes subject to the collection and control system requirement of 40 CFR 60.752 after May 14, 1997, the design plan shall be due not later than 12 months after submittal or scheduled submittal of an NMOC emission rate report of 50 megagrams (55.12 tons) per year or more.

SECTION 400 – ADMINISTRATIVE REQUIREMENTS (NOT APPLICABLE)

SECTION 500 – MONITORING AND RECORDS (NOT APPLICABLE)

REGULATION III - CONTROL OF AIR CONTAMINANTS

RULE 322

POWER PLANT OPERATIONS

INDEX

SECTION 100-GENERAL

101 PURPOSE

102 APPLICABILITY

103 EXEMPTIONS

104 PARTIAL EXEMPTIONS

SECTION 200-DEFINITIONS

201 COGENERATION STEAM GENERATING UNIT

202 COMBINED CYCLE GAS TURBINE

203 CONTINUOUS EMISSION MONITORING SYSTEM (CEMS)

204 COOLING TOWERS

205 CORRECTIVE ACTION PLAN (CAP)

206 DISTILLATE OIL

207 DRIFT

208 DRIFT ELIMINATOR

209 DRIFT RATE

210 ELECTRIC UTILITY STATIONARY GAS TURBINE

211 ELECTRIC UTILITY STEAM GENERATING UNIT

212 EMERGENCY FUEL

213 EMISSION CONTROL SYSTEM (ECS)

214 FOSSIL FUEL

215 FUEL SWITCHING STARTUP PROCESS

216 HEAT INPUT

217 HIGHER HEATING VALUE (HHV)

218 LOW SULFUR OIL

219 LOWER HEATING VALUE (LHV)

220 NATURAL GAS CURTAILMENT

221 OPACITY
222 PARTICULATE MATTER EMISSIONS
223 PEAK LOAD
224 POWER PLANT OPERATION
225 RATED HEAT INPUT CAPACITY
226 REGENERATIVE CYCLE GAS TURBINE
227 RESIDUAL OIL
228 SIMPLE CYCLE GAS TURBINE
229 STATIONARY GAS TURBINE
230 SULFUR OXIDES (SOx)
231 THIRTY (30) DAY ROLLING AVERAGE
232 THREE (3) HOUR ROLLING AVERAGE
233 TOTAL DISSOLVED SOLIDS (TDS)
234 UNCOMBINED WATER

SECTION 300 – STANDARDS

301 LIMITATIONS – PARTICULATE MATTER
302 LIMITATIONS – OPACITY
303 LIMITATIONS - SULFUR IN FUEL
304 LIMITATIONS –NITROGEN OXIDES
305 LIMITATIONS –CARBON MONOXIDE
306 REQUIREMENTS FOR AIR POLLUTION CONTROL EQUIPMENT AND ECS MONITORING EQUIPMENT
307 EMERGENCY FUEL USE NOTIFICATION

SECTION 400 – ADMINISTRATIVE REQUIREMENTS (NOT APPLICABLE)

SECTION 500 – MONITORING AND RECORDS

501 RECORDKEEPING AND REPORTING
502 RECORDS RETENTION
503 COMPLIANCE DETERMINATION
504 TEST METHODS INCORPORATED BY REFERENCE

Adopted 7/02/03
Revised 10/17/07

MARICOPA COUNTY AIR POLLUTION CONTROL REGULATIONS

REGULATION III - CONTROL OF AIR CONTAMINANTS
RULE 322

POWER PLANT OPERATIONS

SECTION 100 - GENERAL

101 **PURPOSE:** To limit the discharge of nitrogen oxides, sulfur oxides, particulate matter and carbon monoxide emissions into the atmosphere from stationary fossil-fuel-fired equipment at existing power plants and existing cogeneration plants and to limit particulate matter emissions from cooling towers associated with this equipment.

102 **APPLICABILITY:** This rule applies to any of the following types of equipment that burn fossil fuel for which construction commenced prior to May 10, 1996:

102.1 Each electric utility steam generating unit or cogeneration steam generating unit used to generate electric power that has a heat input of equal to or greater than 100 million (MM) Btu/hour (29 megawatts (MW)).

102.2 Each electric utility stationary gas turbine with a heat input at peak load equal to or greater than 10 MMBtu/hour (2.9 MW) based upon the lower heating value of the fuel.

102.3 Each cooling tower associated with the type of equipment listed in subsections 102.1 and 102.2.

103 EXEMPTIONS: This rule shall not apply to the following types of equipment:

103.1 Combustion equipment associated with nuclear power plant operations; or

103.2 Reciprocating internal combustion equipment.

104 PARTIAL EXEMPTIONS:

104.1 Stationary gas turbines that meet any of the following criteria listed below are exempt from Sections 304 and 305 and subsections 301.1, 301.2, 306.4, and 501.4 of this rule:

a. Used for fire fighting; or

b. Used for flood control; or

c. Used in the military at military training facilities or military gas turbines for use in other than a garrison; or

d. Engaged by manufacturers in research and development of equipment for either gas turbine emission control techniques or gas turbine efficiency improvements.

104.2 All equipment listed in Section 102 fired with an emergency fuel that is normally fired with natural gas is exempt from Sections 304 and 305 and subsections 301.1, 301.2, and 306.4, 501.4 of this rule.

104.3 All equipment listed in Section 102 shall be exempt from Sections 304 and 305 and subsections 301.1, 301.2, and 306.4, of this rule for 36

cumulative hrs. of firing emergency fuel per year, per unit for testing, reliability, training, and maintenance purposes.

SECTION 200 - DEFINITIONS: For the purpose of this rule, the following definitions shall apply: See Rule 100 (General Provisions and Definitions) of these rules for definitions of terms that are used but not specifically defined in this rule.

201 COGENERATION STEAM GENERATING UNIT – A steam or hot water generating unit that simultaneously produces both electrical (or mechanical) and thermal energy (such as heat or steam) from the same primary energy source and supplies more than one-third of its potential electric output to any utility power distribution system for sale.

202 COMBINED CYCLE GAS TURBINE – A type of stationary gas turbine wherein heat from the turbine exhaust is recovered by a steam generating unit to make steam for use in a steam-electric turbine.

203 CONTINUOUS EMISSION MONITORING SYSTEM (CEMS) – The total equipment required to sample and analyze emissions or process parameters such as opacity, nitrogen oxide, and oxygen or carbon dioxide, and to provide a permanent data record.

204 COOLING TOWERS – Open water recirculating devices that use fans or natural draft to draw or force air through the device to cool water by evaporation and direct contact.

205 CORRECTIVE ACTION PLAN (CAP) - A methodical procedure that is used to evaluate and correct a turbine operational problem and that includes, at a minimum, improved preventative maintenance procedures, improved ECS operating practices, possible operational changes, and progress reports.

206 DISTILLATE OIL – A petroleum fraction of fuel oil produced by distillation that complies with the specifications for fuel oil numbers 1 or 2, as defined by the American Society for Testing and Materials in ASTM D396-01, "Standard Specification for Fuel Oils."

207 DRIFT – Water droplets, bubbles, and particulate matter that escape from cooling tower stacks.

208 DRIFT ELIMINATOR – Device used to remove drift from cooling tower exhaust air, thus reducing water loss by relying on rapid changes in velocity and direction of air-droplet mixtures by impaction on eliminator passage surfaces**.** A drift eliminator is not categorized as an emission control system but is an inherent part of the cooling tower's design requirements.

209 DRIFT RATE – Percentage (%) of circulating water flow rate that passes through a drift eliminator on a cooling tower.

210 ELECTRIC UTILITY STATIONARY GAS TURBINE – Any stationary gas turbine that is constructed for the purpose of supplying more than 1/3 of its potential electric output capacity to any utility power distribution system for sale. Both simple and combined cycle gas turbines are types of electric utility stationary gas turbines.

211 ELECTRIC UTILITY STEAM GENERATING UNIT – Any steam electric generating unit that uses fossil fuel and is constructed for the purpose of supplying more than one-third of its potential electric output capacity and more than 25 MW electric output to any utility power distribution system for sale.

212 EMERGENCY FUEL - Fuel fired only during circumstances such as natural gas emergency, natural gas curtailment, or breakdown of delivery system such as an unavoidable interruption of supply that makes it impossible to fire

natural gas in the unit. Fuel is not considered emergency fuel if it is used to avoid either peak demand charges or high gas prices during on-peak price periods or due to a voluntary reduction in natural gas usage by the power company.

213 EMISSION CONTROL SYSTEM (ECS) – A system approved in writing by the Control Officer, designed and operated in accordance with good engineering practice to reduce emissions.

214 FOSSIL FUEL – Naturally occurring carbonaceous substances from the ground such as natural gas, petroleum, coal and any form of solid, liquid, or gaseous fuel derived from such material for the purpose of creating energy.

215 FUEL SWITCHING STARTUP PROCESS – The act of changing from one type of fuel to a different type of fuel.

216 HEAT INPUT – Heat derived from the combustion of fuel, not including the heat input from preheated combustion air, recirculated flue gases, or exhaust gases from other sources, such as gas turbines, internal combustion engines, and kilns.

217 HIGHER HEATING VALUE (HHV) or GROSS HEATING VALUE – The amount of heat produced by the complete combustion of a unit quantity of fuel determined by a calorimeter wherein the combustion products are cooled to the temperature existing before combustion and all of the water vapor is condensed to liquid.

218 LOW SULFUR OIL – Fuel oil containing less than or equal to 0.05 % by weight of sulfur.

219 LOWER HEATING VALUE (LHV) OR NET HEATING VALUE – The amount of heat produced by the complete combustion of a unit quantity of fuel determined by a calorimeter wherein the combustion products are cooled to the temperature existing before combustion and all of the water vapor remains as vapor and is not condensed to a liquid. The value is computed from the higher heating value by subtracting the water originally present as moisture and the water formed by combustion of the fuel.

220 NATURAL GAS CURTAILMENT - An interruption in natural gas service, such that the daily fuel needs of a combustion unit cannot be met with natural gas available due to one of the following reasons, beyond the control of the owner or operator:

220.1 An unforeseeable failure or malfunction, not resulting from an intentional act or omission that the governing state, federal or local agency finds to be due to an act of gross negligence on the part of the owner or operator; or

220.2 A natural disaster; or

220.3 The natural gas is curtailed pursuant to governing state, federal or local agency rules or orders; or

220.4 The serving natural gas supplier provides notice to the owner or operator that, with forecasted natural gas supplies and demands, natural gas service is expected to be curtailed pursuant to governing state, federal or local agency rules or orders.

221 OPACITY – A condition of the ambient air, or any part thereof, in which an air contaminant partially or wholly obscures the view of an observer**.**

222 PARTICULATE MATTER EMISSIONS – Any and all particulate matter emitted to the ambient air as measured by applicable state and federal test methods.

223 PEAK LOAD – 100% of the manufacturer's design capacity of a gas turbine at 288° Kelvin, 60% relative humidity, and 101.3 kilopascals pressure (ISO standard day conditions).

224 POWER PLANT OPERATION – An operation whose purpose is to supply more than one-third of its potential electric output capacity to any utility power distribution system for sale.

225 RATED HEAT INPUT CAPACITY – The heat input capacity in million Btu/hr. as specified on the nameplate of the combustion unit. If the combustion unit has been altered or modified such that its maximum heat input is different than the heat input capacity on the name plate, the maximum heat input shall be considered the rated heat input capacity.

226 REGENERATIVE CYCLE GAS TURBINE – Any stationary gas turbine that recovers thermal energy from the exhaust gases and utilizes the thermal energy to preheat air prior to entering the combustion unit.

227 RESIDUAL OIL – The heavier oils that remain after the distillate oils and lighter hydrocarbons are distilled off in refinery operations. This includes crude oil or fuel oil numbers 1 and 2 that have a nitrogen content greater than 0.05 % by weight, and all fuel oil numbers 4, 5, and 6, as defined by the American Society of Testing and Materials in ASTM D396-01, "Standard Specifications for Fuel Oils."

228 SIMPLE CYCLE GAS TURBINE – Any stationary gas turbine that does not recover heat from the gas turbine exhaust gases to preheat the inlet

combustion air to the gas turbine, or that does not recover heat from the gas turbine exhaust gases to heat water or generate steam.

229 **STATIONARY GAS TURBINE –** Any simple cycle gas turbine, regenerative gas turbine or any gas turbine portion of a combined cycle gas turbine that is not self propelled or that is attached to a foundation.

230 **SULFUR OXIDES (SOx) –** The sum of the oxides of sulfur emitted from the flue gas from a combustion unit that are directly dependent upon the amount of sulfur in the fuel used.

231 **THIRTY (30) DAY ROLLING AVERAGE –** An arithmetic mean or average of all hourly emission rates for 30 successive combustion equipment operating days and calculated by a CEMS every hour.

232 **THREE (3) HOUR ROLLING AVERAGE –** An arithmetic mean or average of the most recent three one (1) hour tests, or an arithmetic mean or average over a period of three hours which is newly calculated with each hourly measurement.

233 **TOTAL DISSOLVED SOLIDS (TDS) –** The amount of concentrated matter reported in milligrams/liter (mg/l) or parts per million (ppm) left after filtration of a well-mixed sample through a standard glass fiber filter. The filtrate is evaporated to dryness in a weighed dish and dried to constant weight at 180° C and the increase in dish weight represents the total dissolved solids.

234 **UNCOMBINED WATER –** Condensed water containing no more than analytical trace amounts of other chemical elements or compounds.

SECTION 300 – STANDARDS

301 LIMITATIONS – PARTICULATE MATTER:

301. 1 Fuel Type: An owner or operator of any combustion equipment listed in Section 102 shall burn only natural gas except when firing emergency fuel per subsections 104.2 and 104.3 of this rule. An owner or operator may burn a fuel other than natural gas for non-emergency purposes providing that the fuel shall not cause to be discharged more than 0.007 lbs. of particulate matter per MMBtu, demonstrated and documented through performance testing of this alternate fuel using Test Method 5. This usage of different fuels other than natural gas shall be approved by the Control Officer prior to usage.

301.2 Particulate Matter Testing – A backhalf analysis shall be performed, using Reference Method 202 referenced in subsection 504.6, each time a compliance test for particulate matter emissions to meet the standard in subsection 301.1 of this rule is performed using Test Method 5.

301.3 Good Combustion Practices for Turbines: An owner or operator of any stationary gas turbine listed in subsection 102.2, regardless of fuel type, shall use operational practices recommended by the manufacturer and parametric monitoring to ensure good combustion control as listed below. One of the following procedures may be used:

a. Monitor the maximum temperature differential across the combustion burners or at locations around the back end of the turbine, dependent upon the particular unit, to ensure no more than a 100°F difference using a thermocouple. If a valid maximum temperature differential of greater than 100°F is

observed across the burners, investigation and corrective action shall be taken within three hours to reduce the temperature difference to 100°F or less; or

b. If the manufacturer recommends that the maximum numerical temperature differential to ensure good combustion is a temperature that is greater than 100°F, then proof of this maximum alternate temperature shall be submitted to the Control Officer. The procedure to measure the maximum temperature differential listed above in subsection 301.3a shall then be followed using this alternate recommended maximum temperature differential after approval by the Control Officer.

c. If the frequency of failure to meet the proper temperature differential of 100°F or to meet the alternate temperature differential recommended by the manufacturer reflects a pattern that the turbine is not being operated in a manner consistent with good combustion practices, then the Control Officer may require the owner or operator to submit a Corrective Action Plan (CAP).

301.4 Cooling Towers: An owner or operator of a cooling tower associated with applicable units listed in Section 102 shall:

a. Equip the cooling tower with a drift eliminator. The drift eliminator shall not be manufactured out of wood.

b. The concentration of Total Dissolved Solids (TDS) multiplied by the percentage of drift rate shall not exceed the maximum numerical limit of 20.

c. Visually inspect the drift eliminator on a monthly basis only if the drift eliminator can be viewed safely and does not require an owner or operator to walk into the tower. If the drift eliminator cannot be safely inspected monthly then subsection 301.4d shall apply:

d. Visually inspect the drift eliminator for integrity during a regularly scheduled outage when the cooling tower is not operating, if it cannot be inspected on a monthly basis. This visual inspection shall be no less than once per year.

302 LIMITATIONS – OPACITY:

302.1 No person shall discharge into the ambient air from any single source of emissions any air contaminant, other than uncombined water, in excess of 20% opacity, except as provided in subsection 302.2.

302.2 Opacity may exceed the applicable limits established in subsection 302.1 for up to one hour during the start - up of switching fuels; however, opacity shall not exceed 40% for any six (6) minute averaging period in this one hour period, provided that the Control Officer finds that the owner or operator has, to the extent practicable, maintained and operated the source of emissions in a manner consistent with good air pollution control practices for minimizing emissions. The one hour period shall begin at the moment of startup of fuel switching.

302.3 Determination of whether good air pollution control practices are being used shall be based on information provided to the Control Officer upon request, which may include, but is not limited to, the following:

a. Monitoring results.

b. Opacity observations.

c. Review of operating and maintenance procedures.

d. Inspection of the source.

303 LIMITATIONS - SULFUR IN FUEL: An owner or operator of any applicable equipment listed in Section 102 that burns fuel oil alone or in combination with any other fuel as either emergency fuel or non-emergency fuel that meets the standards in subsection 301.1 shall use only low sulfur oil.

304 LIMITATIONS – NITROGEN OXIDES: No owner or operator of any applicable equipment listed in subsection 102.1 that commenced construction or a major modification after May 30, 1972 shall cause to be discharged into the atmosphere nitrogen oxides in excess of the following limits:

304.1 155 ppmv, calculated as nitrogen dioxide when burning gaseous fossil fuel. During steady state operations, this test result using EPA Reference Method(s) 7 shall be based upon the arithmetic mean of the results of three test runs. Each test run shall have a minimum sample time of one hour. If a Continuous Emission Monitoring System (CEMS) is used, the test result shall be based upon a 30-day rolling average.

304.2 230 ppmv calculated as nitrogen dioxide when burning liquid fossil fuel. During steady state operations, this test result using EPA Reference Method(s) 7, shall be based upon the arithmetic mean of the results of three test runs. Each test run shall have a minimum sample time of one hour. If a CEMS is used, the test result shall be based upon a 30-day rolling average.

304.3 The nitrogen oxides concentration shall be measured dry and corrected to 3% oxygen for electric utility steam generating units and cogeneration steam generating units. The nitrogen oxides concentration shall be measured dry and corrected to 15% oxygen for stationary gas turbines.

305 LIMITATIONS - CARBON MONOXIDE: No owner or operator of any equipment listed in Section 102 shall cause to be discharged into the atmosphere carbon monoxide (CO) measured in excess of 400 ppmv at any time. This test result, using EPA Reference Method 10, and performed during steady state compliance source testing shall be based upon the arithmetic mean of the results of three test runs. Each test run shall have a minimum sample time of one hour. The CO concentration shall be measured dry and corrected to 3% oxygen for electric utility steam generating units and cogeneration steam generating units. The CO concentration shall be measured dry and corrected to 15% oxygen for stationary gas turbines.

306 REQUIREMENTS FOR AIR POLLUTION CONTROL EQUIPMENT AND ECS MONITORING EQUIPMENT:

306.1 Emission Control System Required: For affected operations which may exceed any of the applicable standards set forth in Section 300 of this rule, an owner or operator may comply by installing and operating an emission control system (ECS).

306.2 Providing and Maintaining ECS Monitoring Devices: No owner or operator required to use an approved ECS pursuant to this rule shall do so without first properly installing, operating, and maintaining in calibration and in good working order, devices for indicating temperatures, pressures, transfer rates, rates of flow, or other operating conditions necessary to determine if air pollution control

equipment is functioning properly and is properly maintained as described in an approved Operation and Maintenance (O&M) Plan.

306.3 Operation and Maintenance (O&M) Plan Required For ECS:

a. **General Requirements:** An owner or operator shall provide and maintain an O&M Plan for any ECS, any other emission processing equipment, and any ECS monitoring devices that are used pursuant to this rule or to an air pollution permit.

b. **Approval by Control Officer:** An owner or operator shall submit to the Control Officer for approval the O&M Plans of each ECS and each ECS monitoring device that is used pursuant to this rule.

c. **Initial Plans:** An owner or operator that is required to have an O&M Plan pursuant to this rule shall comply with all O&M Plans that the owner or operator has submitted for approval, but which have not yet been approved, unless notified by the Control Officer in writing. Once the initial plan has been approved in writing by the Control Officer, an owner or operator shall then comply with the approved plan.

d. **Revisions to Plan:** If revisions to the initial plan have been approved by the Control Officer in writing, an owner or operator shall comply with the revisions to the initial plan. If revisions to the plan have not yet been approved by the Control Officer, then an owner or operator shall comply with the newest recent O&M plan on file at Maricopa County Air Quality Department.

e. **Control Officer Modifications to Plan**: After discussion with the owner or operator, the Control Officer may modify the plan in writing prior to approval of the initial O & M plan. An owner or operator shall then comply with the plan that has been modified by the Control Officer.

306.4 Continuous Emission Monitoring Systems (CEMS):

a. An owner or operator of a combustion unit subject to Section 304 with a heat input of greater than 250 MMBtu/hr, regardless of fuel type, shall install, calibrate, maintain, and operate a CEMS for measuring nitrogen oxides and recording the output of the system. Where nitrogen oxide emissions are monitored by a CEMS, then a CEMS shall also be required for the measurement of the oxygen content of the flue gases. All CEMS shall comply with the provisions in 40 CFR Subpart Da, Part 60, 60.47 (a).

b. An owner or operator of any affected unit listed above that requires a CEMS for nitrogen oxides that meets and is continuing to meet the requirements of 40 CFR Part 75 may use that CEMS to meet the requirements of subsection 306.4 a of this rule.

307 EMERGENCY FUEL USE NOTIFICATION – An owner or operator of a unit that is fired with_emergency fuel but is normally fired with natural gas shall notify the Control Officer verbally no later than 24 hours after declaration of the emergency that necessitates its use in compliance with subsections 104.2 and 212. This verbal report shall be followed by a written report within 48 hours of initial emergency fuel usage. The written report shall also include identification of the nature of the emergency, initial dates of usage, and the expected dates of usage.

SECTION 400 - ADMINISTRATIVE REQUIREMENTS (NOT APPLICABLE)

SECTION 500 - MONITORING AND RECORDS

501 RECORDKEEPING AND REPORTING: Any owner or operator subject to this rule shall comply with the requirements set forth in this section. Any records and data required by this section shall be kept on site at all times in a consistent and complete manner and be made available without delay to the Control Officer or his designee upon request. Records shall consist of the following information:

501.1 Equipment Listed in Section 102: Type of fuel used, amount of fuel used, amount of sulfur in the fuel if using liquid fuel, and the days and hours of operation.

501.2 Cooling Towers: Monthly gravimetric testing reports for TDS shall be recorded for six months in succession and thereafter quarterly reports shall be recorded. Results of the monthly or yearly visual inspection of the drift eliminator shall also be recorded. If the drift eliminator cannot be visually inspected monthly, then documentation of the physical configuration of the drift eliminator shall be submitted to the Control Officer to demonstrate that the drift eliminator cannot be inspected monthly.

501.3 Emergency Fuel Usage: Type and amount of emergency fuel used, dates and hours of operation using emergency fuel, nature of the emergency or reason for the use of emergency fuel as stated in subsections 104.2 and 104.3.

501.4 Fuel Switching: Monthly records of fuel switching including stop and start times, monthly records of hours of operation for testing,

reliability and maintenance purposes per subsection 104.3, and a yearly log total of these hours.

501.5 CEMS: All CEMS measurements, results of CEMS performance evaluations, CEMS calibration checks, and adjustments and maintenance performed on these systems.

501.6 Good Combustion Practices: Measurements of the temperature differential across the burners of turbines per subsection 301. 3 a, b, or c, results of evaluation and of corrective action taken to reduce the temperature differential or a finding that the temperature differential returned to the range listed in subsection 301.3 a or b without any action by the owner or operator.

502 RECORDS RETENTION: Copies of reports, logs, and supporting documentation required by the Control Officer shall be retained for at least 5 years. Records and information required by this rule shall also be retained for at least 5 years.

503 COMPLIANCE DETERMINATION:

503.1 Low Sulfur Oil Verification:

a. An owner or operator shall submit fuel oil or liquid fuel receipts from the fuel supplier indicating the sulfur content of the fuel or verification that the oil used to generate electric power meets the 0.05% sulfur limit if requested by the Control Officer; or

b. If fuel receipts are not available then an owner or operator shall submit a statement of certification or proof of the sulfur

content of the oil or liquid fuel from the supplier to the Control Officer; or

c. An owner or operator may elect to test the fuel for sulfur content in lieu of certification from the fuel supplier or fuel receipts using one of the test methods listed in subsections 504.11, 504.12, 504.13 or 504.14.

503.2 Drift Rate Verification: An owner or operator shall submit design drift rate verification from the manufacturer of the drift eliminator used in the cooling towers to the Control Officer if proof of the design drift rate is requested by the Control Officer.

504 TEST METHODS INCORPORATED BY REFERENCE: The EPA test methods as they exist in the Code of Federal Regulations (CFR) (July 1, 2004), as listed below, are incorporated by reference in Appendix G of the Maricopa County Air Pollution Control Regulations. Copies of test methods referenced in this Section are available at the Maricopa County Air Quality Department, 1001 N. Central Avenue, Suite 595, Phoenix, AZ 85004-1942. The Standard Methods listed below (1995)are also incorporated by reference. When more than one test method as listed in subsections 504.11 through 504.14 is permitted for the same determination, an exceedance of the limits established in this rule determined by any of the applicable test methods constitutes a violation.

504.1 EPA Reference Methods 1 ("Sample and Velocity Traverses for Stationary Sources"), and 1A ("Sample and Velocity Traverses for Stationary Sources with Small Stacks and Ducts") (40 CFR 60, Appendix A).

504.2 EPA Reference Methods 2 ("Determination of Stack Gas Velocity and Volumetric Flow Rate"), 2A ("Direct Measurement of Gas Volume

Through Pipes and Small Ducts"), 2C ("Determination of Stack Gas Velocity and Volumetric Flow Rate in Small Stacks or Ducts"), and 2D ("Measurement of Gas Volumetric Flow Rates in Small Pipes and Ducts") (40 CFR 60, Appendix A).

504.3 EPA Reference Methods 3 ("Gas Analysis for the Determination of Dry Molecular Weight"), 3A ("Determination of Oxygen and Carbon Dioxide Concentrations in Emissions From Stationary Sources (Instrumental Analyzer Procedure)"), 3B ("Gas Analysis for the Determination of Emission Rate Correction Factor of Excess Air"), and 3C ("Determination of Carbon Dioxide, Methane, Nitrogen and Oxygen from Stationary Sources") (40 CFR 60, Appendix A).

504.4 EPA Reference Method 4 ("Determination of Moisture Content in Stack Gases") (40 CFR 60, Appendix A).

504.5 EPA Reference Method 5 ("Determination of Particulate Emissions from Stationary Sources") (40 CFR 60, Appendix A).

504.6 EPA Reference Method 202 ("Determination of Condensable Particulate Emissions from Stationary Sources") (40 CFR 51, Appendix M).

504.7 EPA Reference Methods 7 ("Determination of Nitrogen Oxide Emissions from Stationary Sources"), 7A ("Determination of Nitrogen Oxide Emissions from Stationary Sources"), 7B ("Determination of Nitrogen Oxide Emissions from Stationary Sources - Ultraviolet Spectrometry"), 7C ("Determination of Nitrogen Oxide Emissions from Stationary Sources - Alkaline-Permanganate Colorimetric Method"), 7D ("Determination of Nitrogen Oxide Emissions from Stationary Sources – Alkaline-Permanganate Chromatographic Method"), and 7E

("Determination of Nitrogen Oxide Emissions from Stationary Sources – Instrumental Analyzer Method") (40 CFR 60, Appendix A).

504.8 EPA Reference Method 9 ("Visual Determination of the Opacity of Emissions from Stationary Sources") (40 CFR 60, Appendix A).

504.9 EPA Reference Method 10 ("Determination of Carbon Monoxide Emissions from Stationary Sources") (40 CFR 60, Appendix A).

504.10 EPA Reference Method 20 ("Determination of Nitrogen Oxides, Sulfur Dioxide and Diluent Emissions from Stationary Gas Turbines") (40 CFR 60, Appendix A).

504.11 American Society of Testing Materials, ASTM Method D2622-98, ("Standard Test Method for Sulfur in Petroleum Products by Wavelength Disperse X-Ray Fluorescence Spectrometry"), 1998.

504.12 American Society of Testing Materials, ASTM Method D1266-98, ("Standard Test Method for Sulfur in Petroleum Products - Lamp Method"), 1998.

504.13 American Society of Testing Materials, ASTM Method D2880-00, ("Standard Specification for Gas Turbine Fuel Oils"), 2000.

504.14 American Society of Testing Materials, ASTM Method D4294-90 or 98 ("Standard Test Method for Sulfur in Petroleum Products by Energy-Dispersive X-Ray Fluorescence Spectrometry"), 1990 or 1998.

504.15 Standard Methods for the Examination of Water and Wastewater,("Dissolved Solids Dried at 180ºC, Method #2540C"), American Public Health Association, 19th edition, 1995.

REGULATION III - CONTROL OF AIR CONTAMINANTS

RULE 323

FUEL BURNING EQUIPMENT FROM INDUSTRIAL /COMMERCIAL/ INSTITUTIONAL (ICI) SOURCES

INDEX

SECTION 100 - GENERAL

101 PURPOSE
102 APPLICABILITY
103 EXEMPTIONS
104 PARTIAL EXEMPTIONS

SECTION 200 - DEFINITIONS

201 ALTERNATIVE FUELS
202 COGENERATION STEAM GENERATING UNIT
203 CORRECTIVE ACTION PLAN (CAP)
204 DISTILLATE OIL
205 EMERGENCY FUEL
206 EMISSION CONTROL SYSTEM (ECS)
207 FOSSIL FUEL
208 HEAT INPUT
209 LOW SULFUR OIL
210 NATURAL GAS CURTAILMENT
211 OPACITY
212 PARTICULATE MATTER EMISSIONS
213 PEAK LOAD
214 PROCESS HEATER
215 RATED HEAT INPUT CAPACITY
216 REGENERATIVE CYCLE GAS TURBINE

217 RESIDUAL OIL

218 SIMPLE CYCLE GAS TURBINE

219 STATIONARY GAS TURBINE

220 STEAM GENERATING UNIT

221 SULFUR OXIDES (SOx)

222 UNCOMBINED WATER

223 WASTE DERIVED FUEL GAS

224 WATER HEATER

SECTION 300 - STANDARDS

301 LIMITATIONS - PARTICULATE MATTER

302 LIMITATIONS - OPACITY

303 LIMITATIONS -SULFUR IN FUEL

304 LIMITATIONS -NITROGEN OXIDES

305 LIMITATION - CARBON MONOXIDE

306 REQUIREMENTS FOR AIR POLLUTION CONTROL EQUIPMENT AND ECS MONITORING EQUIPMENT

SECTION 400 - ADMINISTRATIVE REQUIREMENTS (NOT APPLICABLE)

SECTION 500 - MONITORING AND RECORDS

501 RECORDKEEPING AND REPORTING

502 RECORDS RETENTION

503 COMPLIANCE DETERMINATION

504 TEST METHODS INCORPORATED BY REFERENCE

Adopted 07/03/05
Revised 10/17/07

REGULATION III - CONTROL OF AIR CONTAMINANTS
RULE 323
FUEL BURNING EQUIPMENT FROM INDUSTRIAL /COMMERCIAL/ INSTITUTIONAL (ICI) SOURCES
INDEX

SECTION 100 – GENERAL

101 PURPOSE: To limit the discharge of nitrogen oxides, sulfur oxides, carbon monoxide, and particulate matter emissions into the atmosphere from fuel burning combustion equipment at industrial and/or commercial and/or institutional (ICI) sources.

102 APPLICABILITY: This rule applies to any of the following types of ICI combustion equipment that burns either fossil fuels or alternative fuels:

102.1 Each steam generating unit that has a maximum design rated heat input capacity from fuels combusted in the generating unit of greater than 10 million (MM) Btu/hr (2.9 Megawatts (MW)).

102.2 Each stationary gas turbine with a heat input at peak load equal to or greater than 2.9 megawatts (MW).

102.3 Each cogeneration steam generating unit with a heat input of greater than 10 MMBtu/hr.

102.4 Each indirect-fired process heater with a heat input greater than 10 MMBtu/hr.

102.5 NSPS & NESHAP: In addition to this rule, facilities may be subject to New Source Performance Standards (NSPS) in Rule 360 and/or National Emission Standards for Hazardous Air Pollutants (NESHAP) in Rule 370 of these Rules.

103 EXEMPTIONS: This rule shall not apply to the following types of equipment:

103.1 Incinerators, crematories, or burn-off ovens; or

103.2 Dryers, cement and lime kilns; or

103.3 Direct-fired process heaters; or

103.4 Medical waste incinerators; or

103.5 Reciprocating internal combustion equipment; or

103.6 Combustion equipment used in power plant operations for the purpose of supplying greater than one third of the electricity to any utility power distribution system for sale; or

103.7 Combustion equipment associated with nuclear power plant operations; or

103.8 Water heaters used for the sole purpose of heating hot water for comfort or for radiant heat.

104 PARTIAL EXEMPTIONS:

104.1 Stationary gas turbines listed in subsection 102.2 of this rule that are used for any of the following reasons shall be exempt from Sections 304, 305 and subsections 301.1, 301.2, 501.1 and 501.3 of this rule:

a. Used for firefighting; or

b. Used for flood control; or

c. Used at military training facilities other than a garrison facility; or

d. Engaged by manufacturers in research and the development of equipment for either gas turbine emission control techniques or gas turbine efficiency improvements; or

e. Fired with emergency fuel that is normally fired with natural gas, or

f. Testing, reliability, maintenance, training, and readiness purposes for a total of 36 hours per year per unit when firing any emergency fuel.

104.2 All steam generating units including cogeneration units and process heaters that are used for any of the following reasons shall be exempt from Sections 301, 304, 305 and subsections 501.1 and 501.3 of this rule:

a. Fired with an emergency fuel that is normally fired with natural gas; or

b. Firing any emergency fuel for testing, reliability, and maintenance purposes up to a maximum total of 36 hrs. per unit per year.

SECTION 200 - DEFINITIONS: For the purpose of this rule, the following definitions shall apply. See Rule 100 (General Provisions and Definitions) of these rules for definitions of terms that are used but not specifically defined in this rule.

201 **ALTERNATIVE FUELS –** Substitutes for traditional oil-derived and fossil-fuel derived motor vehicle fuels including but not limited to biodiesel, propane, ethanol or methanol.

202 **COGENERATION STEAM GENERATING UNIT –** A steam or hot water generating unit that simultaneously produces both electrical (or mechanical) and thermal energy (such as heat or steam) from the same primary energy source.

203 **CORRECTIVE ACTION PLAN (CAP) –** A methodical procedure that is used to evaluate and correct a turbine operational problem and that includes, at a minimum, improved preventative maintenance procedures, improved ECS operating practices, possible operational amendments, and progress reports.

204 **DISTILLATE OIL**-A petroleum fraction of fuel oil produced by distillation that complies with the specifications for fuel oil numbers 1 or 2, as defined by the American Society for Testing and Materials in ASTM D396-01, "Standard Specification for Fuel Oils."

205 **EMERGENCY FUEL –** Fuel fired by a gas combustion unit, normally fueled by natural gas, only during circumstances of unforeseen disruption or interruption in the supply of natural gas to a unit that normally runs on

natural gas. The inability to burn natural gas may be one of the following, but is not limited to, natural gas emergency, natural gas curtailment, or a breakdown of the delivery system.

206 EMISSION CONTROL SYSTEM (ECS) - A system approved in writing by the Control Officer, designed and operated in accordance with good engineering practice to reduce emissions.

207 FOSSIL FUEL – Naturally occurring carbonaceous substances from the ground such as natural gas, petroleum, coal, and any form of solid, liquid or gaseous fuel derived from such material for the purpose of creating energy.

208 HEAT INPUT – Heat derived from the combustion of fuel not including the heat input from preheated combustion air, recirculated flue gases, or exhaust gases from other sources, such as gas turbines, internal combustion engines, and kilns.

209 LOW SULFUR OIL – Fuel oil containing less than or equal to 0.05 % by weight of sulfur.

210 NATURAL GAS CURTAILMENT – A shortage in the supply of natural gas, due solely to limitations or restrictions in distribution pipelines by the utility supplying the gas and not due to the cost of natural gas.

211 OPACITY – A condition of the ambient air, or any part thereof, in which an air contaminant partially or wholly obscures the view of an observer.

212 PARTICULATE MATTER EMISSIONS - Any and all particulate matter emitted to the ambient air as measured by applicable state and federal test methods.

213 **PEAK LOAD** - 100% of the manufacturer's design capacity of a gas turbine at 288 Kelvin, 60% relative humidity, and 101.3 kilopascals pressure (ISO standard day conditions).

214 **PROCESS HEATER** – An enclosed combustion device that uses controlled flame to transfer heat to a process fluid or a process material that is not a fluid or to heat transfer material for use in a process unit (not including the generation of steam). A process heater may be either indirect or direct-fired, dependent upon whether the gases of combustion mix with and exhaust to the same stack or vent (direct-fired) with gases emanating from the process material or not (indirect-fired). Emissions from indirect-fired units consist entirely of products of combustion while emissions from direct-fired units are unique to the given process and may vary widely in any industrial process. A process heater is not an oven or kiln used for drying, curing, baking, cooking, calcining, or vitrifying.

215 **RATED HEAT INPUT CAPACITY** - The heat input capacity in million Btu/hr. as specified on the nameplate of the combustion unit. If the combustion unit has been altered or modified so that its maximum heat input is different than the heat input capacity on the nameplate (design heat capacity), the maximum heat input shall be considered as the rated heat input capacity.

216 **REGENERATIVE CYCLE GAS TURBINE –** Any stationary gas turbine that recovers thermal energy from the exhaust gases and utilizes the thermal energy to preheat air prior to entering the combustor.

217 **RESIDUAL OIL –** The heavier oils that remain after the distillate oils and lighter hydrocarbons are distilled off in refinery operations. This includes crude oil or fuel oil numbers 1 and 2 that have a nitrogen content greater than 0.05% by weight, and all fuel oil numbers 4, 5 and 6, as defined by

the American Society of Testing and Materials in ASTM D396-01, "Standard Specifications for Fuel Oils".

218 SIMPLE CYCLE GAS TURBINE – Any stationary gas turbine that does not recover heat from the gas turbine exhaust gases to preheat the inlet combustion air to the gas turbine, or that does not recover heat from the gas turbine exhaust gases to heat water or generate steam.

219 STATIONARY GAS TURBINE – Any simple cycle gas turbine or regenerative gas turbine that is not self-propelled or that is attached to a foundation.

220 STEAM GENERATING UNIT - An external combustion unit or boiler fired by fossil fuel that is used to generate hot water or steam. The hot water or steam is then used as energy for driving another process or piece of equipment.

221 SULFUR OXIDES (SOx)- The sum of the oxides of sulfur emitted from the flue gas from a combustion unit that are directly dependent upon the amount of sulfur in the fuel used.

222 UNCOMBINED WATER – Condensed water containing no more than analytical trace amounts of other chemical elements or compounds.

223 WASTE DERIVED FUEL GAS – Any gaseous fuel that is generated from the biodegradation of solid or liquid waste including but not limited to, sewage sludge, digester gas, and landfill gas.

224 WATER HEATER – A closed vessel in which water is heated by combustion of fuel and water is either withdrawn for use external to the vessel (at pressures not exceeding 160 psi with all controls and devices preventing water temperatures from exceeding 210°F) or used for radiant

heat. Water heaters are usually no larger than 1 MM Btu/hr as opposed to boilers, do not reach temperatures of 220°F and higher that boilers can reach, and are not manufactured to meet boiler codes.

SECTION 300 - STANDARDS

301 LIMITATIONS - PARTICULATE MATTER:

301.1 Limitation- Liquid Fuels: An owner or operator shall not discharge, cause or allow the discharge of particulate matter emissions, caused by combustion of non-gaseous liquid fuels or a blend of liquid fuels with other fuels in excess of 0.10 lbs. per MMBtu from any combustion units listed in subsections 102.1, 102.3 and 102.4 with either a rated heat input capacity or heat input of greater than 100 MM Btu/hr.

301.2 Particulate Matter Testing: A backhalf analysis shall be performed, using Reference Method 202 referenced in subsection 504.6 of this rule, each time a compliance test for particulate matter emissions to meet the standards in subsection 301.1 of this rule is performed using Method 5. (The results of the Method 202 testing shall be used for emissions inventory purposes).

301.3 Good Combustion Practices for Turbines: An owner or operator of a stationary gas turbine listed in subsection 102.2 of this rule, regardless of fuel type or size, shall use operational practices recommended by the manufacturer and parametric monitoring that ensure good combustion control. One of the following procedures may be used:

a. Monitor the maximum temperature differential across the combustion burners or at locations around the back end of the

turbine, dependent upon the particular unit, to ensure no more than a 100° F difference using a thermocouple. If a valid maximum temperature differential of greater than 100° F is observed across the burners, investigation and corrective action shall be taken within three hours to either reduce the temperature difference to 100° F or less, or

b. If the manufacturer recommends that the maximum numerical temperature differential to ensure good combustion is a temperature that is greater than 100°F, then proof of this maximum alternate temperature shall be submitted to the Control Officer. The procedure to measure the maximum temperature differential listed above in subsection 301.3a shall then be followed using the alternate recommended maximum temperature differential after approval by the Control Officer.

c. If a repetitive pattern of failure to meet the proper temperature differential of 100°F or to meet the alternate temperature differential recommended by the manufacturer indicates that the turbine is not being operated in a manner consistent with good combustion practices, then the Control Officer may require the owner or operator to submit a Corrective Action Plan (CAP).

302 LIMITATIONS – OPACITY: No owner or operator shall discharge into the ambient air from any single source of emissions any air contaminant, other than uncombined water, in excess of 20% opacity.

303 LIMITATIONS - SULFUR IN FUEL: An owner or operator of any applicable equipment listed in Section 102 that burns liquid fuel oil or a mixture or blend of fuel oil with any other fuels shall use only low sulfur oil. An owner or operator using waste derived fuel gas shall use only

waste derived fuel gas with a sulfur content less than or equal to 800 ppm (0.08%).

304 LIMITATIONS – NITROGEN OXIDES:

304.1 An owner or operator of any combustion equipment listed in Section 102 with a heat input of greater than 10 MMBtu/hr to 100 MMBtu/hr, except gas turbines, shall comply either with (a) or (b below:

a. Establish initial optimal baseline concentrations for NOx and CO within 90 days of the first usage of the combustion equipment utilizing the initial design burner specifications or manufacturer's recommendations to ensure good combustion practices. Tune the unit annually in accordance with good combustion practices or a manufacturer's procedure, if applicable, that will include the following at a minimum:

(1) Inspect the burner system and clean and replace any components of the burner as necessary to minimize emissions of NOx and CO; and

(2) Inspect the burner chamber for areas of impingement and remove if necessary; and

(3) Inspect the flame pattern and make adjustments as necessary to optimize the flame pattern; and

(4) Inspect the system controlling the air-to-fuel ratio and ensure that it is correctly calibrated and functioning properly; and

(5) Measure the NOx and the CO concentration of the effluent stream after each adjustment was made with a handheld portable monitor to ensure optimal baseline concentrations are maintained or

b. Limit nitrogen oxide emissions to no more than the following amounts:

(1) 155 ppm calculated as nitrogen dioxide, when burning gaseous fuel. During steady state operations, this test result using EPA Reference Method(s) 7 shall be based upon the arithmetic mean of the results of three test runs. Each test run shall have a minimum sample run time of one hour.

(2) 230 ppm calculated as nitrogen dioxide, when burning liquid fuel. During steady state operations, this test result using EPA Reference Method(s) 7 shall be based upon the arithmetic mean of the results of three test runs. Each test run shall have a minimum sample run time of one hour.

c. For simple gas turbines, the nitrogen oxides shall be measured dry and corrected to 15% oxygen. For all other combustion equipment, the nitrogen oxides shall be measured dry and corrected to 3% oxygen.

304.2 An owner or operator of any combustion equipment, listed in Section 102, with a heat input greater than 100 MMBtu/hr, shall:

a. Tune the equipment every 6 months with good combustion practices or a manufacturer's procedure that at a minimum

includes the procedures listed in subsection 304.1a of this rule and

b. Meet the NOx emission limits as stated in subsection 304.1b of this rule.

305 LIMITATIONS – CARBON MONOXIDE: No owner or operator of any equipment listed in Section 102 of this rule with a heat input greater than 100 MM Btu/hr shall cause to be discharged into the atmosphere, carbon monoxide (CO), measured in excess of 400 ppmv at any time. This test result, using EPA Reference Method 10, shall be based upon the arithmetic mean of the results of three test runs and shall be measured during steady state compliance source testing. Each test run shall have a minimum sample time of one hour. For simple gas turbines, the CO shall be measured dry and corrected to 15% oxygen. For all other combustion equipment, the CO shall be measured dry and corrected to 3% oxygen.

306 REQUIREMENTS FOR AIR POLLUTION CONTROL EQUIPMENT AND ECS MONITORING EQUIPMENT:

306.1 Emission Control System Required: For affected operations which may exceed any of the applicable standards set forth in Sections 300 of this rule, an owner or operator may comply by installing and operating an emission control system (ECS).

306.2 Providing and Maintaining ECS Monitoring Devices: No owner or operator required to use an approved ECS pursuant to this rule shall do so without first providing, properly installing, operating, and maintaining in calibration and in good working order, devices for indicating temperatures, pressures, transfer rates, rates of flow, or other operating conditions necessary to

determine if air pollution control equipment is functioning properly and is properly maintained as described in an approved O&M Plan.

306.3 Operation and Maintenance (O&M) Plan Required For ECS:

a. **General Requirements**: An owner or operator shall provide and maintain an O&M Plan for any ECS, any other emission processing equipment, and any ECS monitoring devices that are used pursuant to this rule or an air pollution permit.

b. **Approval by Control Officer:** An owner or operator shall submit to the Control Officer for approval the O&M Plans of each ECS and each ECS monitoring device that is used pursuant to this rule.

c. **Initial Plans:** An owner or operator that is required to have an O&M Plan pursuant to this rule shall comply with all O&M Plans that the owner or operator has submitted for approval, but which have not yet been approved, unless notified by the Control Officer in writing. Once the initial plan has been approved in writing by the Control Officer, an owner or operator shall comply with this approved plan.

d. **Revisions to Plan:** If revisions to the initial plan have been approved by the Control Officer in writing, an owner or operator shall comply with the revisions to the initial plan. If revisions to the plan have not yet been approved by the Control Officer in writing, then an owner or operator shall comply with the most recent O&M plan on file at Maricopa County Air Quality Department.

e. **Control Officer Modifications to Plan:** After discussion with the owner or operator, the Control Officer may modify the plan in writing prior to approval of the initial O&M plan. An owner or operator shall then comply with the plan that has been modified by the Control Officer.

SECTION 400 - ADMINISTRATIVE REQUIREMENTS (NOT APPLICABLE)

SECTION 500 - MONITORING AND RECORDS

501 RECORDKEEPING AND REPORTING: An owner or operator subject to this rule shall comply with the requirements set forth in this section. Any records and data required by this section shall be kept on site at all times in a consistent and complete manner and be made available without delay to the Control Officer or his designee upon request. Records shall consist of the following information:

501.1 Equipment Listed In Section 102: Type of fuel used, amount of fuel used, amount of sulfur in the fuel if using liquid fuel, and the days and hours of operation.

501.2 Emergency Fuel Usage: Monthly records of: type of emergency fuel used, dates and hours of operation using emergency fuel, and nature of the emergency or purpose for the use of the emergency fuel as stated in subsections 104.1 and 104.2. Yearly records of the twelve month log of hours of operation in the emergency mode.

501.3 Good Combustion Practice: Measurements of the temperature differential across the burners of turbines per subsection 301.3, results of evaluation and corrective action taken to reduce the temperature differential or a finding that the temperature

differential returned to the range listed in subsection 301.3 (a) or (b) of this rule without any action by the owner or operator.

501.4 Tuning Procedure: Date that the procedure was performed on the particular unit and at a minimum: stack gas temperature, flame conditions, nature of the adjustment and results of the nitrogen oxide and carbon monoxide concentrations obtained by using a handheld monitor after each adjustment.

502 RECORDS RETENTION: Copies of reports, logs and supporting documentation required by the Control Officer shall be retained for at least 5 years. Records and information required by this rule shall also be retained for at least 5 years.

503 COMPLIANCE DETERMINATION:

503.1 Low Sulfur Oil Verification:

a. An owner or operator shall submit fuel oil receipts from the fuel supplier indicating the sulfur content of the fuel oil or verification that the fuel oil used meets the 0.05% sulfur limit or the 0.08% limit for landfill or digester gas if requested by the Control Officer, or

b. If fuel receipts are not available, an owner or operator shall submit a statement of certification or proof of the sulfur content of the fuel oil from the supplier to the Control Officer, or

c. An owner or operator may elect to test the fuel oil for sulfur content in lieu of certification from the fuel supplier or fuel

receipts using one of the test methods incorporated by reference in subsections 504.11, 504.12, 504.14 or 504.15.

504 TEST METHODS ADOPTED BY REFERENCE: The EPA test methods as they exist in the Code of Federal Regulations (CFR) (July 1, 2004), as listed below, are incorporated by reference in Appendix G of the Maricopa County Air Pollution Control Regulations. Copies of test methods referenced in this section are available at the Maricopa County Air Quality Department, 1001 N. Central Avenue, Phoenix, AZ 85004-1942. When more than one test method as listed in subsections 504.11, 504.12, 504.14, or 504.15 of this rule is permitted for the same determination, an exceedance of the limits established in this rule determined by any one of the applicable test methods constitutes a violation.

504.1 EPA Reference Methods 1 ("Sample and Velocity Traverses for Stationary Sources"), and 1 A ("Sample and Velocity Traverses for Stationary Sources with Small Stacks and Ducts") (40 CFR 60, Appendix A).

504.2 EPA Reference Methods 2 ("Determination of Stack Gas Velocity and Volumetric Flow Rate"), 2A ("Direct Measurement of Gas Volume Through Pipes and Small Ducts"), 2C ("Determination of Stack Gas Velocity and Volumetric Flow Rate in Small Stacks or Ducts"), and 2D ("Measurement of Gas Volumetric Flow Rates in Small Pipes and Ducts") (40 CFR 60, Appendix A).

504.3 EPA Reference Methods 3 ("Gas Analysis for the Determination of Dry Molecular Weight"), 3A ("Determination of Oxygen and Carbon Dioxide Concentrations in Emissions from Stationary Sources (Instrumental Analyzer Procedure)"), 3B ("Gas Analysis for the Determination of Emission Rate Correction Factor of Excess Air"), and 3C ("Determination of Carbon Dioxide,

Methane, Nitrogen and Oxygen from Stationary Sources") (40 CFR 60, Appendix A).

504.4 EPA Reference Method 4 ("Determination of Moisture Content in Stack Gases") (40 CFR 60, Appendix A).

504.5 EPA Reference Method 5 ("Determination of Particulate Emissions from Stationary Sources") (40 CFR 60, Appendix A)

504.6 EPA Reference Method 202 ("Determination of Condensable Particulate Emissions from Stationary Sources") (40 CFR 51, Appendix M).

504.7 EPA Reference Methods 7 ("Determination of Nitrogen Oxide Emissions from Stationary Sources"), 7A ("Determination of Nitrogen Oxide Emissions form Stationary Sources"), 7B ("Determination of Nitrogen Oxide Emissions from Stationary Sources – Ultraviolet Spectrometry"), 7C ("Determination of Nitrogen Oxide Emissions from Stationary Sources – Alkaline-Permanganate Colorimetric Method"), 7D ("Determination of Nitrogen Oxide Emissions from Stationary Sources – Alkaline – Permanganate Chromatographic Method"), and 7E ("Determination of Nitrogen Oxide Emissions from Stationary Sources – Instrumental Analyzer Method"), (40 CFR 60, Appendix A).

504.8 EPA Reference Method 9, ("Visual Determination of the Opacity of Emissions from Stationary Sources") (40 CFR 60, Appendix A).

504.9 EPA Reference Method 10, ("Determination of Carbon Monoxide from Stationary Sources") (40 CFR 60, Appendix A).

504.10 EPA Reference Method 20, ("Determination of Nitrogen Oxides, Sulfur Dioxide, and Diluent Emissions From Stationary Gas Turbines") (40 CFR 60, Appendix A).

504.11 American Society of Testing Materials, ASTM Method D2622-92 or 98, ("Standard Test Method for Sulfur in Petroleum Products by Wavelength Dispersive X-Ray Fluorescence Spectrometry"), 1992 or 1998.

504.12 American Society of Testing Materials, ASTM Method D1266-98, ("Standard Test Method for Sulfur in Petroleum Products (Lamp Method)"), 1998.

504.13 American Society of Testing Materials, ASTM Method D2880-00, ("Standard Specification for Gas Turbine Fuel Oils"), 2000.

504.14 American Society of Testing Materials, ASTM Method D4294-90 or 98, ("Standard Test Method for Sulfur in Petroleum and Petroleum Products by Energy- Dispersive X-ray Fluorescence Spectrometry"), 1990 or 1998.

504.15 American Society of Testing Materials, ASTM Method D5504-01,("Standard Test Method for Determination of Sulfur compounds in Natural Gas and Gaseous Fuels by Gas Chromatography and Chemiluminescence"), 2006.

REGULATION III - CONTROL OF AIR CONTAMINANTS
RULE 324
STATIONARY INTERNAL COMBUSTION (IC) ENGINES

INDEX

SECTION 100 – GENERAL

101 PURPOSE
102 APPLICABILITY
103 EXEMPTIONS
104 PARTIAL EXEMPTIONS FOR EMERGENCY ENGINES
105 PARTIAL EXEMPTIONS FOR LOW USAGE ENGINES

SECTION 200 – DEFINITIONS

201 AFTERCOOLER / INTERCOOLER
202 COGENERATION UNIT
203 COMPRESSION-IGNITION ENGINE
204 DIESEL ENGINE
205 EMERGENCY GENERATOR
206 ENGINE FAMILY
207 EQUIVALENT REPLACEMENT ENGINE
208 EXISTING ENGINE
209 IDENTICAL REPLACEMENT ENGINE
210 INTERNAL COMBUSTION (IC) ENGINE, PORTABLE
211 INTERNAL COMBUSTION (IC) ENGINE, STATIONARY
212 LEAN-BURN ENGINE
213 LOCATION
214 LOW SULFUR OIL
215 NEW ENGINE

216 PART(S) PER MILLION, DRY VOLUME (ppmdv)
217 PRIME ENGINES
218 RATED BRAKE HORSEPOWER (RATED bhp)
219 RICH-BURN ENGINE
220 SPARK-IGNITION ENGINE
221 SULFUR OXIDES (SOx)
222 WASTE DERIVED FUEL GAS

SECTION 300 – STANDARDS

301 LIMITATIONS FOR EXISTING AND NEW STATIONARY IC ENGINES
302 ADDITIONAL LIMITATIONS FOR IC ENGINES > 250 RATED bhp
303 EQUIVALENT OR IDENTICAL ENGINE REPLACEMENT

SECTION 400 - ADMINISTRATIVE REQUIREMENTS

401 COMPLIANCE SCHEDULE

SECTION 500 - MONITORING AND RECORDS

501 COMPLIANCE DETERMINATION
502 RECORDKEEPING/RECORDS RETENTION
503 TEST METHODS ADOPTED/INCORPORATED BY REFERENCE

Adopted 10/23/03
Revised 10/17/07

MARICOPA COUNTY
AIR POLLUTION CONTROL REGULATIONS
REGULATION III - CONTROL OF AIR CONTAMINANTS
RULE 324
STATIONARY INTERNAL COMBUSTION (IC) ENGINES

SECTION 100 – GENERAL

101 **PURPOSE:** To limit carbon monoxide (CO), nitrogen oxides (NO_x), sulfur oxides (SO_X), volatile organic compounds (VOCs), and particulate matter (PM) emissions from stationary internal combustion (IC) engines.

102 **APPLICABILITY:** The provisions of this rule apply to any single existing or new stationary spark or compression-ignited reciprocating IC engine including stationary IC engines used in cogeneration, with a rating of greater than 250 brake horsepower (bhp). The provisions of this rule also apply to a combination of IC engines each with a rated brake horsepower greater than 50 bhp used at a single source, whose maximum aggregate rated brake horsepower is greater than 250 bhp.

103 **EXEMPTIONS:** The following types of stationary IC engines are exempt from all of the requirements of this rule but shall comply with Rule 300:

103.1 Any rotary engine, including gas turbines, jet engines.

103.2 An IC engine operated as a non-road engine.

103.3 A laboratory IC engine used directly and exclusively for engine research including engine development, and subsequent engine performance verification for the purpose of either engine emission control techniques or engine efficiency improvements.

103.4 A prime engine when it is operated for purposes of performance verification and testing by the owner or operator or by a manufacturer or distributor of such equipment for the purpose of performance verification and testing at the production facility.

103.5 A compressed gas IC engine used for solar testing and research programs.

103.6 An IC engine operated as an emergency generator or other equipment at a nuclear power plant that must run for safety reasons and/or operational tests to meet requirements imposed by the Nuclear Regulatory Commission.

103.7 An IC engine test stand used for evaluating engine performance; and

103.8 An IC e ngine used for training purposes as long as the total number of hours of the operation does not exceed 100 hours per calendar year per engine.

104 PARTIAL EXEMPTIONS FOR EMERGENCY ENGINES: Any stationary IC engine operated as an emergency engine for any of the following reasons is exempt from all of the provisions of this rule, except for the provisions in Sections 301, 303, and subsections 502.1 and 502.4:

104.1 Used only for power when normal power service fails from the serving utility or if onsite electrical transmission or onsite power generation equipment fails.

104.2 Used only for the emergency pumping of water resulting from a flood, fire, lightning strikes, police action or for any other essential public services which affect the public health and safety.

104.3 Used for lighting airport runways.

104.4 Used for sewage overflow mitigation and/or prevention.

104.5 Used for reliability-related activities such as engine readiness, calibration, or maintenance or to prevent the occurrence of an unsafe condition during electrical system maintenance, as long as the total number of hours of the operation does not exceed 100 hours per calendar year per engine as evidenced by an installed non-resettable hour meter.

104.6 Used as the prime engine when the prime engine has failed, but only for such time as is needed to repair the prime engine; or

104.7 Used to operate standby emergency water pumps for fire control that activate when sensors detect low water pressure.

105 PARTIAL EXEMPTIONS FOR NON-EMERGENCY LOW USAGE PRIME ENGINES: The following non-emergency, low usage, prime engines are exempt from all of the provisions of this rule except for the provisions in Sections 301, 303 and subsections 502.1 and 502.4:

105.1 Each engine rated at or below 1000 bhp that operates less than 200 hours in any 12-consecutive-month period as evidenced by an installed non-resettable hour meter.

105.2 Each engine rated above 1000 bhp that operates less than 100 hours in any 12-consecutive month period as evidenced by an installed non-resettable hour meter.

SECTION 200 – DEFINITIONS: For the purpose of this rule, the following definitions shall apply. See Rule 100 (General Provisions And Definitions) of these rules for definitions of terms that are used but not specifically defined in this rule.

201 AFTERCOOLER / INTERCOOLER– A system that cools the engine intake air or air/fuel mixture after the air exits the turbocharger and prior to the introduction into the cylinder, thereby lowering NOx emissions.

202 COGENERATION UNIT– Internal combustion engine unit that burns fuel to simultaneously produce electricity and heat in a single thermodynamic process and is usually located in close proximity to the equipment requiring the heat energy.

203 COMPRESSION - IGNITION ENGINE – A reciprocating internal combustion engine with operating characteristics wherein the principal mechanism of igniting the fuel and air mixture in the cylinders is the compression of air in the cylinder until it is so hot that any fuel injected into the air or mixed with the air ignites. In this type of engine, a separate ignition source, such as a spark plug, is not used.

204 DIESEL ENGINE – A type of compression- ignited IC engine.

205 EMERGENCY ENGINE– Any stationary standby IC engine whose sole function is to provide back-up power when electric power from the local utility is interrupted or when operated solely for any of the reasons listed in Section 104. An emergency engine, for the purposes of this rule, shall not be used to supply standby power due to a voluntary reduction in power by a utility or power company, supply power for distribution or sale to the grid, or supply power at a source in order to avoid peak demand charges or high electric energy prices during on-peak price periods and shall not exceed 500 hours of operation including the 100 hours listed in subsection 104.5.

206 ENGINE FAMILY - A group of engines with similar design features such as fuel type, cooling medium, method of air aspiration, combustion chamber design including cylinder bore and stroke, exhaust aftertreatment (if any), method of fuel admission, and method of control. These engines are also expected to have similar emission and operating characteristics throughout their useful lives.

207 EQUIVALENT REPLACEMENT ENGINE - An engine that is substituted for a stationary IC engine that is intended to perform the same or similar function as the original engine and where all of the following conditions exist:

207.1 The replacement engine results in equal or lower air contaminant emissions than the existing engine; and

207.2 The replacement engine meets the emission control technology standards contained in either Table 1 or Table 2 of this rule; and

207.3 The rated bhp of the replacement engine does not exceed the rated bhp of the existing engine (or sum of existing engines) by more than 20 percent. For every percentage point increase of the rated brake horsepower, there shall be an associated decrease in emissions of nitrogen oxides, expressed as a mass per unit time, equal to or exceeding two percentage points.

208 EXISTING ENGINE - An engine that commenced operation prior to October 22, 2003 or an engine on which the construction or modification has commenced prior to October 22, 2003, including the contractual obligation to undertake and complete an order for an engine.

209 IDENTICAL REPLACEMENT ENGINE - An engine that is substituted for an existing stationary IC engine that has the same manufacturer type, model number, manufacturer's maximum rated capacity, bhp, and that is intended to perform the same or similar function as the original stationary IC engine that it replaces and has equal or lower emissions or meets the emission control technology requirements in Section 304, Table 1, 2, or 3.

210 INTERNAL COMBUSTION (IC) ENGINE, NONROAD

210.1 Any IC engine:

a. In or on a piece of equipment that is self-propelled or serves a dual purpose by both propelling itself and performing another function (such as garden tractors, off-highway mobile cranes and bulldozers); or

b. In or on a piece of equipment that is intended to be propelled while performing its function (such as lawnmowers and string trimmers); or

c. That, by itself or in or on a piece of equipment, is portable or transportable, meaning designed to be and capable of being carried or moved from one location to another. Indicia of transportability include but are not limited to, wheels, skids, carrying handles, dollies, trailers, or platforms.

210.2 An internal combustion engine is not a nonroad engine if:

a. The engine is used to propel a motor vehicle or a vehicle used solely for competition, or is subject to standards promulgated under Section 202 of the Clean Air Act; or

b. The engine is regulated by a fe deral New Source Performance Standard promulgated under Section 111 of the Clean Air Act; or

c. The engine otherwise included in paragraph (c) above of this definition remains or will remain at a location for more than 12 consecutive months or a shorter period of time for an engine located at a seasonal source. A location is any single site at a b uilding, structure, facility, or installation. Any engine (or engines) that replaces an engine at a location and that is intended to perform the same or similar function as the engine replaced will be included in calculating the consecutive time period. An engine

located at a seasonal source is an engine that remains at a seasonal source during the full annual operating period of the seasonal source. A seasonal source is a stationary source that remains in a single location on a permanent basis (i.e. at least two years) and that operates at that single location approximately three months (or more) each year. This paragraph does not apply to an engine after the engine is removed from the location.

211 INTERNAL COMBUSTION (IC) ENGINE, STATIONARY - Any reciprocating, piston-driven IC engine that is operated or intended to be operated at one specific location for more than 12 consecutive months or that is attached to a foundation at the location. Any engine that replaces an engine at a location and is intended to perform the same or similar function as the engine being replaced will be included in calculating the consecutive time period. A stationary IC engine is not a non-road engine.

212 LEAN-BURN ENGINE – A spark-ignited engine with an air-to-fuel operating range that has more air present than is needed to burn the fuel present and cannot be adjusted to operate with an exhaust oxygen concentration of less than or equal to 2 %.

213 LOCATION – Any single site at a building, structure, facility or installation.

214 LOW SULFUR OIL – Fuel oil containing less than or equal to 0.05 % sulfur by weight.

215 NEW ENGINE -An engine that is not an existing engine.

216 PART(S) PER MILLION, DRY VOLUME (ppmdv) – A unit of proportion equal to 10^{-6} that is measured on a dry basis (minus water) at 15% oxygen.

217 PRIME ENGINE – A principal or main use engine that is dedicated to a process or processes for the purpose of supplying primary mechanical or electrical power as opposed to an emergency engine.

218 RATED BRAKE HORSEPOWER - The maximum brake horsepower (bhp) specified by the engine manufacturer for the engine application, usually listed on the nameplate of the engine. If the engine has been altered so that the maximum brake horsepower is different than the rated brake horsepower on the nameplate, then the maximum brake horsepower shall be considered the rated brake horsepower.

219 RICH-BURN ENGINE - Any spark-ignited IC engine that is not a lean-burn engine.

220 SPARK-IGNITION ENGINE – An IC engine wherein the fuel is usually mixed with intake air before introduction into the combustion chamber resulting in a relatively homogeneous air/fuel mixture in the combustion chamber, at which time a spark plug then ignites the air/fuel mixture.

221 SULFUR OXIDES (SOx) – Oxides of sulfur calculated as equivalent sulfur dioxide.

222 WASTE DERIVED FUEL GAS - Any gaseous fuel that is generated from the biodegradation of solid or liquid waste including, but not limited to, sewage sludge, digester gas, and landfill gas.

SECTION 300 – STANDARDS:

301 LIMITATIONS FOR NEW AND EXISTING STATIONARY IC ENGINES: An owner or operator of any engine that meets the criteria listed in Section 102 shall comply with either of the following:

301.1 Use any fuel that contains no more than 0.05% sulfur by weight, alone or in combination with other fuels.

301.2 Use any waste derived fuel gas that contains no more than 0.08% sulfur by weight, alone or in combination with other fuels.

302 GOOD COMBUSTION PRACTICES / TUNING PROCEDURE: An owner or operator shall conduct preventative maintenance or tuning procedures recommended by the engine manufacturer to ensure good combustion practices to minimize NOx emissions. A handheld monitor may be used if so desired by the owner or operator for measurement of NOx, CO, and concentrations in the effluent stream after each adjustment is made. This may assist in determining that the proper adjustment has been made to ensure NOx and CO minimization. In lieu of a manufacturer's procedure, a different procedure specified by any other maintenance guideline may be used as a default procedure. The tuning procedure shall include all of the following, if so equipped, and appropriate to the type of engine:

302.1 Lubricating Oil and Filter: change once every three months or after no more than 300 hours of operation, whichever occurs last.

302.2 Inlet Air Filter: clean once every three months or after no more than 300 hours of operation and replace every 1,000 hours of operation or every year, whichever occurs last;

302.3 Fuel Filter: clean once every year or replace (if cartridge type) once every 1,000 hours of operation, whichever occurs last.

302.4 Check and adjust the following once every year or after no more than 1,000 hours of operation, whichever occurs last:

a. intake and exhaust valves
b. spark plugs (if so equipped)
c. spark timing and dwell or fuel injection timing (if adjustable), and
d. carburetor mixture (if adjustable).

302.5 Spark Plugs and Ignition Points: replace after 3,000 hours of operation or every year whichever occurs last

302.6 Coolant: change after 3,000 hours of operation or every year whichever occurs last.

302.7 Exhaust System: check for leaks and/or restrictions after 3,000 hours of operation or every year whichever occurs last.

303 **LIMITATIONS – OPACITY:** No owner or operator shall discharge into the ambient air from any single source of emissions any air contaminant, other than uncombined water, in excess of 20% opacity.

304 ADDITIONAL LIMITATIONS FOR PRIME ENGINES > 250 RATED bhp: In addition to meeting the standards in Sections 301, 302, and 303, each existing or new prime engine greater than 250 rated bhp that is not listed in Sections 103, 104, or 105, shall comply with the emission limits or control technology requirements listed in Section 304, Table 1, 2, or 3, dependent upon the type of engine.

NOx EMISSION LIMITS OR CONTROL TECHNOLOGY REQUIREMENTS FOR EXISTING COMPRESSION-IGNITION ENGINES > 250 bhp

TABLE 1

RATED BRAKE HORSEPOWER (bhp)	ENGINE REQUIREMENTS
250-399	770 ppmdv or 10 g/bhp-hr.NOx or turbocharger with aftercooler/intercooler or 4-degree injection timing retard
400 plus	550 ppmdv or 7.2 g/bhp-hr.NOx or turbocharger with aftercooler/intercooler or 4-degree injection timing retard

EMISSION LIMITS OR CONTROL TECHNOLOGY REQUIREMENTS FOR EXISTING APPLICABLE SPARK- IGNITION ENGINES > 250 RATED bhp

TABLE 2

OXIDES OF NITROGEN (NO_X)	VOLATILE ORGANIC COMPOUND (VOC)	CARBON MONOXIDE (CO)
280 ppmdv or 4.0 b/bhp-hr or three-way catalyst*	800 ppmdv or 5.0 g/bhp-hr or three-way catalyst*	4,500 ppmdv or three-way catalyst*

- The three-way catalyst shall provide a minimum of 80% control efficiency for NOx and CO for those engines fueled with natural gas, propane or gasoline. In addition the three-way catalyst shall also provide a minimum of at least 50% control efficiency for VOC for those engines fueled by gasoline.

EMISSION LIMITS FOR NEW SPARK OR COMPRESSION-IGNITION ENGINES > 250 bhp

TABLE 3

ENGINE TYPE	NOx	PM*	CO
LEAN BURN (SPARK)	110 ppmdv or 1.5 g/bhp-hr.	Not Applicable	4,500 ppmdv
RICH BURN (SPARK)	20 ppmdv or 0.30 g/bhp-hr.	Not Applicable	4,500 ppmdv
COMPRESSION	530 ppmdv or 6.9 g/bhp-hr.	0.40 g/bhp-hr	1,000 ppmdv

* A backhalf analysis shall be performed using reference Method 202 (referenced in subsection 504.6) each time a compliance test for particulate matter emissions to meet the limitations listed in Table 3 is performed using Method 5. The results of the Method 202 testing shall be used for emissions inventory purposes.

305 EFFICIENCY ALLOWANCE:

Each emission limit expressed in Tables 1, 2 or 3 may be multiplied by X, where X equals the engine efficiency (E) divided by a reference efficiency of 30 percent. Engine efficiency shall be determined by one of the following methods whichever is higher:

a. E = (Engine Output) X (100) ÷ (Energy Input)

where energy input is determined by a fuel measuring device accurate to +/- 5 % and is based upon the higher heating value (HHV) of the fuel. Percent efficiency (E) shall be averaged over 15

consecutive minutes and measured at peak load for the applicable engine.

b. E = (Manufacturers Rated Efficiency [Continuous] at (LHV) X (LHV) ÷(HHV) where LHV = the lower heating value of the fuel

Engine efficiency (E) shall not be less than 30 percent; an engine with an efficiency lower than 30 percent shall be assigned an efficiency of 30 percent for the purposes of this rule.

306 EQUIVALENT OR IDENTICAL ENGINE REPLACEMENT: An equivalent or identical replacement engine that replaces an existing engine shall be treated as an existing engine for the purposes of compliance with this rule, unless the engine commenced operation or was constructed or modified after October 22, 2003, including the contractual obligation to undertake and complete an order for an engine and then it will be considered a new engine for purposes of meeting the standards for a new engine in this rule.

SECTION 400 - ADMINISTRATIVE REQUIREMENTS

401 COMPLIANCE SCHEDULE:

An owner or operator of an existing stationary IC engine that must be replaced with a new engine to meet emission limits listed in Section 300 shall be in compliance with the emission limits listed in Section 304, Table 3 by October 22, 2007.

SECTION 500 - MONITORING AND RECORDS

501 COMPLIANCE DETERMINATION:

501.1 Existing Engines: Existing IC engines or engine families shall demonstrate compliance with Section 300 by recordkeeping according to Section 502. Emission testing using the applicable test methods listed in Section 503 shall be performed if the Control Officer requests.

501.2 Existing Engine Families at a Source: When testing an engine family at one source, the number of engines tested should be the greater of either one engine or one third of all identical engines in the group. If an y of the representative engines exceed the emission limits, each engine in the group shall demonstrate compliance by emissions testing.

501.3 New Engines / New Engine Families: Compliance with the limitations listed in Section 304, Table 3 shall be demonstrated by either:

a. A statement from the manufacturer that the engine meets the most stringent emissions standards found in 40 CFR Part 89 or 90 applicable to the engine and its model year at the time of manufacture or

b. Performance of emission testing using the test methods listed in Section 503.

501.4 Low Sulfur Oil Verification: If the Control Officer requests proof of the sulfur content, the owner or operator shall submit fuel receipts, contract specifications, pipeline meter tickets, Material Safety Data Sheets (MSDS), fuel supplier information or purchase records, if applicable, from the fuel supplier, indicating the sulfur content of the fuel oil.

In lieu of these, testing of the fuel oil for sulfur content to meet the 0.05% limit shall be permitted if so desired by the owner or operator for evidence of compliance.

501.5 Waste - Derived Fuel Sulfur Verification: The owner or operator shall submit documentation of the concentration of the sulfur level of the waste- derived fuel to the Control Officer.

501.6 Test Method Conditions: The owner or operator shall use the test methods listed in Section 503 to determine compliance with the limitations in Section 304, Tables 1-3. Testing for stationary IC engines shall be completed under steady state conditions at either the maximum operating load or no less than 80% of the rated brake horsepower rating. If the owner or operator of an engine demonstrates to the Control Officer that the engine cannot operate at these conditions, then emissions source testing shall be performed at the highest achievable continuous brake horsepower rating or under the typical duty cycle or typical operational mode of the engine.

502 RECORDKEEPING / RECORDS RETENTION: The owner or operator of any stationary IC engine subject to this rule shall comply with the following requirements and keep records for a period of 5 years:

502.1 An owner or operator of any IC engine, including emergency engines, prime engines and low usage engines, shall keep a record that includes an initial one time entry that lists the particular engine combustion type (compression or spark-ignition or rich or lean burn);

manufacturer; model designation, rated brake horsepower, serial number and where the engine is located on the site.

502.2 An owner or operator of a prime engine shall maintain a monthly record for prime engines which shall include:

1. Hours of operation;
2. Type of fuel used, and
3. Documentation verifying compliance with sulfur fuel content according to subsection 301.1.

502.3 An owner or operator of a prime engine shall maintain an annual record of good combustion procedures according to Section 302.

502.4 An owner or operator of an emergency engine and a non-emergency low-usage engine that meets the exemptions listed in Sections 104 and 105 shall keep an engine record that includes:

1. Monthly rolling twelve month total of hours of operation, including hours of operation for testing, reliability and maintenance;
2. Fuel type and sulfur content of fuel; and
3. Explanation for the use of the engine if it is used as an emergency engine.

503 TEST METHODS INCORPORATED BY REFERENCE: The Environmental Protection Agency (EPA) test methods as they exist in the Code of Federal Regulations (CFR) (July 1, 2004) and the American Society of Testing Materials International Methods as listed below, are incorporated by reference in Appendix G of the Maricopa County Rules and Regulations. The When more than one test method is permitted for the same determination, as listed in

subsections 503.12, 503.13, 503.14, or 503.15, an exceedance of the limits established in this rule determined by any of the applicable test methods constitutes a violation. Copies of test methods referenced in this section of this rule are available at the Maricopa County Environmental Services Department, 1001 North Central Avenue, Suite 201, Phoenix, Arizona, 85004 -1942.

503.1 EPA Reference Methods 1 ("Sample and Velocity Traverses for Stationary Sources") and 1A ("Sample and Velocity Traverses for Stationary Sources with Small Stacks and Ducts") (40 CFR 60, Appendix A).

503.2 EPA Reference Methods 2 ("Determination of Stack Gas Velocity and Volumetric Flow Rate"), 2A ("Direct Measurement of Gas Volume Through Pipes and Small Ducts"), 2C ("Determination of Stack Gas Velocity and Volumetric Flow Rate in Small Stacks or Ducts"), and 2D ("Measurement of Gas Volumetric Flow Rates in Small Pipes and Ducts") (40 CFR 60, Appendix A).

503.3 EPA Reference Methods 3 (" Gas Analysis for the Determination of Dry Molecular Weight"), 3A ("Determination of Oxygen and Carbon Dioxide Concentrations in Emissions from Stationary Sources (Instrumental Analyzer Procedure"), 3B ("Gas Analysis for the Determination of Emission Rate Correction Factor of Excess Air"), and 3C (" Determination of Carbon Dioxide, Methane, Nitrogen and Oxygen from Stationary Sources") (40 CFR 60, Appendix A).

503.4 EPA Reference Method 4 ("Determination of Moisture Content in Stack Gases") (40 CFR 60, Appendix A).

503.5 EPA Reference Method 5 (" Determination of Particulate Emissions from Stationary Sources") (40 CFR 60, Appendix A)

503.6 EPA Reference Method 202 ("Determination of Condensable Particulate Emissions from Stationary Sources") (40 CFR 51, Appendix M).

503.7 EPA Reference Methods 7 ("Determination of Nitrogen Oxide Emissions from Stationary Sources"), 7A ("Determination of Nitrogen Oxide Emissions form Stationary Sources - Ion chromatographic method"), 7B ("Determination of Nitrogen Oxide Emissions from Stationary Sources – Ultraviolet Spectrometry"), 7C ("Determination of Nitrogen Oxide Emissions from Stationary Sources – Alkaline-Permanganate Colorimetric Method"), 7D ("Determination of Nitrogen Oxide Emissions from Stationary Sources – Alkaline – Permanganate Chromatographic Method"), and 7E ("Determination of Nitrogen Oxide Emissions from Stationary Sources – Instrumental Analyzer Method"), (40 CFR 60, Appendix A).

503.8 EPA Reference Method 9 ("Visual Determination of the Opacity of Emissions from Stationary Sources") (40 CFR 60, Appendix A).

503.9 EPA Reference Method 10 (" Determination of Carbon Monoxide from Stationary Sources") (40 CFR 60, Appendix A).

503.10 EPA Reference Method 18 ("Measurement of Gaseous Organic Compound Emissions by Gas Chromatography") (40 CFR 60, Appendix A).

503.11 EPA Reference Method 25A ("Determination of Total Gaseous Organic Concentration Using a Flame Ionization Analyzer") (40 CFR 60, Appendix A).

503.12 American Society of Testing Materials International, ASTM Method D1266-98 ("Standard Test Method for Sulfur in Petroleum Products (Lamp Method)"), 1998.

503.13 American Society of Testing Materials International, ASTM Method D2622-98 ("Standard Test Method for Sulfur in Petroleum Products by Wavelength Dispersive X-Ray Fluorescence Spectrometry"), 1998.

503.14 American Society of Testing Materials International, ASTM Method D2880-71, 78 or 96 ("Standard Specification for Gas Turbine Fuel Oils"), 1971 or 1978 or 1996.

503.15 American Society of Testing Materials International, ASTM Method D4294-98 ("Standard Test Method for Sulfur in Petroleum Products by Energy-Dispersive X-Ray Fluoresence Spectroscopy") 1990 or 1998.

503.16 American Society of Testing Materials International, ASTM Method D5504-01("Standard Test Method for Determination of Sulfur Compounds in Natural Gas and Gaseous Fuels by Gas Chromatography and Chemiluminescence), 2006.

REGULATION III - CONTROL OF AIR CONTAMINANTS

RULE 325

BRICK AND STRUCTURAL CLAY PRODUCTS (BSCP) MANUFACTURING

INDEX

SECTION 100 – GENERAL

101 PURPOSE

102 APPLICABILITY

103 EXEMPTIONS

SECTION 200 – DEFINITIONS

201 BRICK AND STRUCTURAL CLAY PRODUCTS (BSCP) MANUFACTURING FACILITY

202 CONTINUOUS KILN

203 EXISTING KILN

204 KILN FEED

205 PERIODIC KILN

206 RESEARCH AND DEVELOPMENT TUNNEL KILN

207 TUNNEL KILN

SECTION 300 – STANDARDS

301 OPACITY LIMITATIONS FOR ALL TUNNEL KILNS SUBJECT TO THIS RULE

302 LIMITATIONS FOR EXISTING TUNNEL KILNS AT BRICK OR STRUCTURAL PRODUCT (BSCP) MANUFACTURING FACILITIES

303 LIMITATIONS FOR NEW OR RECONSTRUCTED TUNNEL KILNS AT BRICK OR STRUCTURAL PRODUCT (BSCP) MANUFACTURING FACILITIES

SECTION 400 - ADMINISTRATIVE REQUIREMENTS

401 COMPLIANCE SCHEDULE

SECTION 500 - MONITORING AND RECORDS

501 COMPLIANCE DETERMINATION

502 RECORDKEEPING/RECORDS RETENTION

503 TEST METHODS

MARICOPA COUNTY
AIR POLLUTION CONTROL REGULATIONS
REGULATION III - CONTROL OF AIR CONTAMINANTS
RULE 325
BRICK AND STRUCTURAL CLAY PRODUCTS (BSCP) MANUFACTURING

SECTION 100 – GENERAL

101 PURPOSE: To limit particulate matter emissions from the use of tunnel kilns for curing in the brick and structural clay product (BSCP) manufacturing processes.

102 APPLICABILITY: This rule applies to any existing, new or reconstructed tunnel kiln, used in the commercial and industrial brick and structural clay product manufacturing processes. Compliance with the provisions of this rule shall not relieve any person subject to the requirements of this rule from complying with any other federally enforceable New Sources Performance Standards (NSPS). In such cases, the most stringent standard shall apply.

103 EXEMPTIONS: Existing, new or reconstructed tunnel kilns that are used exclusively for research and development and are not used to manufacture products for commercial sale are not subject to this rule.

SECTION 200 – DEFINITIONS: See Rule 100 (General Provisions And Definitions) of these rules for definitions of terms that are used but not specifically defined in this rule. For the purpose of this rule, the following definitions shall apply:

201 BRICK AND STRUCTURAL CLAY PRODUCTS (BSCP) MANUFACTURING FACILITY - A site that manufactures brick including, but not limited to: face brick, structural brick and brick pavers; claypipe; roof tile; extruded floor and wall tile; and/or other extruded, dimensional, clay products. Brick products manufacturing facilities typically process raw clay and shale, form the processed materials into bricks or shapes, and dry and fire the bricks or shapes.

202 CONTINUOUS KILN – A heated chamber that heats dense loads uniformly and efficiently, and can be used without interruption for high volume production. Continuous kilns are kilns that perform well in the consistent high production of wares. Continuous kilns include tunnel kilns, shuttle kilns, fixed-hearth kilns, bee hive kilns, roller kilns, sled kilns, decorating kilns, and pusher slab kilns. Most continuous kilns are tunnel kilns.

203 EXISTING KILN - A kiln that is in operation before the date of adoption of this rule.

204 KILN FEED – All materials except fuel entering the tunnel kiln, including raw feed and recycle dust, measured on a dry basis.

205 PERIODIC KILN – A kiln that operates on an intermittent basis to heat wares, holding them at a uniform peak temperature and cool the wares. Periodic kilns are best for inconsistent or low-volume production.

206 RESEARCH AND DEVELOPMENT TUNNEL KILN - Any tunnel kiln whose purpose is to conduct research and development for new processes and products and is not engaged in the manufacture of commercial products for sale.

207 TUNNEL KILN – Any continuous kiln that is used to fire brick and structural clay products. Tunnel kilns may have two process streams, including a process stream that exhausts directly to the atmosphere or to an Air Pollution Control Device, and a process stream in which the kiln exhaust is ducted to a brick dryer where it is used to dry bricks before the exhaust is emitted to the atmosphere.

SECTION 300 – STANDARDS

301 OPACITY LIMITATIONS FOR ALL TUNNEL KILNS SUBJECT TO THIS RULE: No person shall discharge into the ambient air from any single source of emissions any air contaminant, other than uncombined water, in excess of 20% opacity.

302 LIMITATIONS FOR EXISTING TUNNEL KILNS AT BRICK OR STRUCTURAL PRODUCT (BSCP) MANUFACTURING FACILITIES:

302.1 No owner or operator shall emit more than 0.42 lbs. of particulate matter per ton of fired product from a tunnel kiln with a capacity of ≥1 tons per hour throughput.

303 LIMITATIONS FOR NEW OR RECONSTRUCTED TUNNEL KILNS AT BRICK OR STRUCTURAL PRODUCT (BSCP) MANUFACTURING FACILITIES:

303.1 No owner or operator shall emit more than 0.42 lbs. of particulate matter per ton of fired product from a tunnel kiln with a capacity of <10 tons per hour throughput.

303.2 No owner or operator shall emit more than 0.12 lbs. of particulate matter per ton of fired product from a tunnel kiln with a capacity of ≥10 tons per hour throughput.

SECTION 400 - ADMINISTRATIVE REQUIREMENTS

401 COMPLIANCE SCHEDULE: Any owner or operator of a tunnel kiln subject to this rule shall meet the following milestones:

401.1 Submit a compliance plan, by December 31, 2005, to the Control Officer for approval which describes the method(s) used to achieve full compliance with the rule. This plan shall specify dates for completing increments of progress, such as the contractual arrival date of new control equipment. The Control Officer may require an owner or operator submitting the compliance plan to also submit subsequent reports on progress in achieving compliance; and

401.2 Attain full compliance with all of the standards in this rule by December 31, 2006.

SECTION 500 - MONITORING AND RECORDS

501 COMPLIANCE DETERMINATION: Compliance shall be demonstrated as follows**:**

501.1 Compliance with Section 301 shall be demonstrated by performance of Method 9 listed in Section 503.1; and

501.2 Compliance with Sections 302 and 303 shall be demonstrated by performance of the test methods listed in Section 503.2 and 503.3.

502 RECORDKEEPING / RECORDS RETENTION: The owner or operator of any kiln subject to this rule shall comply with the following requirements and keep records for a period of 5 years:

502.1 Daily records of kiln feed fired and hours of operation; and

502.2 Monthly records of material delivered to the site for processing in the tunnel kiln and the amount of product produced reported in tons.

503 TEST METHODS: The Environmental Protection Agency (EPA) test methods as they exist in the Code of Federal Regulations (CFR) (July 1, 2004), as listed below, are adopted by reference. These adoptions by reference include no future editions or amendments. Copies of test methods referenced in this section of this rule are available at the Maricopa County Air Quality Department, 1001 North Central Avenue, Suite 695, Phoenix, Arizona, 85004.

503.1 EPA Reference Method 9 ("Visual Determination of the Opacity of Emissions from Stationary Sources"), (40 CFR 60, Appendix A).

503.2 EPA Reference Method 5 ("Determination of Particulate Emissions from Stationary Sources"), (40 CFR 60, Appendix A).

503.3 EPA Reference Method 202 ("Determination of Condensible Particulate Emissions from Stationary Sources"), (40 CFR 51, Appendix M).

REGULATION III – CONTROL OF AIR CONTAMINANTS

RULE 330
VOLATILE ORGANIC COMPOUNDS

INDEX

SECTION 100 – GENERAL

101 PURPOSE

SECTION 200 – DEFINITIONS

201 DAY

202 NON-COMPLYING SOLVENT

203 ORGANIC COMPOUND

204 ORGANIC SOLVENT

SECTION 300 – STANDARDS

301 LIMITATIONS – OPERATIONS INVOLVING HEAT

302 LIMITATIONS – NON-COMPLYING SOLVENTS

303 LIMITATIONS – PROCESS LINES

304 REDUCTIONS REQUIRED

305 EQUIPMENT CLEANUP

306 VOC CONTAINMENT AND DISPOSAL

307 EXEMPTIONS

SECTION 400 – ADMINISTRATIVE REQUIREMENTS

401 COMPLIANCE SCHEDULE

SECTION 500 – MONITORING AND RECORDS

501 PROVIDING AND MAINTAINING MONITORING DEVICES

502 DETERMINATION OF COMPLIANCE

503 RECORDKEEPING AND REPORTING

504 TEST METHODS

Revised 07/13/88
Revised 09/21/92
Revised 06/19/96
Revised 09/25/13

MARICOPA COUNTY
AIR POLLUTION CONTROL REGULATIONS

REGULATION III – CONTROL OF AIR CONTAMINANTS

RULE 330
VOLATILE ORGANIC COMPOUNDS

SECTION 100 – GENERAL

101 **PURPOSE:** To limit emissions of volatile organic compounds into the atmosphere that may result from the use of organic solvents or processes that emit volatile organic compounds.

SECTION 200 – DEFINITIONS: For the purpose of this rule, the following definitions shall apply, in addition to those definitions found in Rule 100 (General Provisions and Definitions) of these rules. In the event of any inconsistency between any of the Maricopa County air pollution control rules, the definitions in this rule take precedence.

201 **DAY:** A period of 24 consecutive hours beginning at midnight.

202 **NON-COMPLYING SOLVENT:** A solvent which exceeds the applicable percentage composition limit for any of the four chemical groupings listed below.

202.1 Group I: One or more of the following families of compounds having the olefinic or cyclo-olefinic type of unsaturation − hydrocarbons, alcohols, aldehydes, esters, ethers, and/or ketones; except perchloroethylene: 5 percent by volume.

202.2 Group II: One or more aromatic compounds having eight or more carbon atoms to the molecule except ethylbenzene, methyl benzoate, and phenyl acetate: 8 percent by volume.

202.3 Group III: One or more of the following compounds and compound types −ketones having a branched hydrocarbon structure, ethylbenzene, trichloroethylene, and/or toluene: 20 percent by volume.

202.4 An aggregate of any combination of the above three groups: 20 percent by volume.

202.5 Whenever any organic solvent or any constituent of an organic solvent may be classified from its chemical structure into more than one of the above groups of organic compounds, it shall be considered a member of the most

reactive chemical group that it can be classified into, that is, that group having the lowest percentage composition limit.

203 **ORGANIC COMPOUND:** Any compound of carbon excluding carbon monoxide, carbon dioxide, carbonic acid, carbonates, and metallic carbides.

204 **ORGANIC SOLVENT:** Any organic compound which is liquid at actual conditions of use or storage and which is used as a diluent, thinner, dissolver, viscosity reducer, extractant, cleaning agent or is a reactant or product in a manufacturing process.

SECTION 300 – STANDARDS

301 **LIMITATIONS–OPERATIONS INVOLVING HEAT**: No person shall discharge more than 15 pounds (6.8 kg) of volatile organic compounds into the atmosphere in any one day from any machine, equipment, device, or other article in which any volatile organic compound or any material containing a volatile organic compound comes into contact with flame or is evaporated at temperatures exceeding 200°F (93.3°C), in the presence of oxygen, unless the entire amount of such discharge has been reduced in accordance with Section 304 of this rule.

302 **LIMITATIONS–NON-COMPLYING SOLVENTS**: Excluding emissions subject to Section 301 above, no person shall discharge more than 40 pounds (18 kg) of volatile organic compounds into the atmosphere in any one day from any machine, equipment, device or other article for employing, applying, evaporating or drying any non-complying solvent (as defined in Section 202 of this rule) or material containing such non-complying solvent, unless the entire amount of such discharge has been reduced in accordance with Section 304 of this rule.

303 **LIMITATIONS–PROCESS LINES**: Emissions of VOCs from any series of machines, equipment, devices or other articles which are designed for processing any item including but not limited to continuous web(s), strip(s), or wire(s) and which use operations described in Sections 301 and/or 302 of this rule shall be collectively subject to the limitations of and compliance with those sections.

304 **REDUCTIONS REQUIRED**: Emission to the atmosphere of volatile organic compounds requiring control pursuant to Section 301 or 302 of this rule shall be reduced by at least one of the following methods:

304.1 Incineration, provided that 90 percent or more of the carbon in the volatile organic compounds entering the incineration device is oxidized to carbon dioxide and overall control efficiency (capture plus processing) is at least 85 percent by weight; or

304.2 Adsorption, provided that overall control efficiency (capture plus processing) is at least 85 percent by weight; or

304.3 Using low VOC material containing no more than 20 percent VOC by volume (as determined by the applicable test method(s) and excluding non-

precursor organic compounds and water), provided that no VOC from the material comes into contact with flame; or

304.4 Processing in a manner not less effective than in subsection 304.1 or 304.2 of this rule and verified by test methods of this rule.

304.5 The owner or operator using an emissions control device to reduce emissions in accordance with this section shall provide the Control Officer with an Operation and Maintenance (O&M) Plan. This plan shall specify key system operating parameters, such as temperatures, pressures and/or flow rates, necessary to determine compliance with this rule and describe in detail procedures to maintain the approved emission control system. The Control Officer's written approval of this plan shall be required for compliance with this rule to be achieved.

305 **EQUIPMENT CLEANUP:** A person shall not use any liquid materials containing more than 10 percent volatile organic compounds for the cleanup of equipment unless:

305.1 The used cleaning liquids are collected in a container which is closed when not in use and is disposed of in a manner such that volatile organic compounds are not emitted into the atmosphere, or

305.2 The equipment is disassembled and cleaned in a solvent vat which is closed when not in use, or cleaning is done by other methods, approved in writing by the Control Officer, which limit evaporation.

306 **VOC CONTAINMENT AND DISPOSAL:** No person shall store, discard, or dispose of VOC or VOC-containing material in a way intended to cause or to allow the evaporation of VOC to the atmosphere. Reasonable measures shall be taken to prevent such evaporation which include but are not limited to the following:

306.1 All materials from which VOC can evaporate, including fresh solvent, waste solvent and solvent-soaked rags and residues, shall be stored in closed containers when not in use; and

306.2 Such containers one gallon and larger shall be legibly labeled with their contents; and

306.3 Records of the disposal/recovery of such materials shall be kept. Records of hazardous waste disposal shall be kept in accordance with hazardous waste disposal statutes.

307 **EXEMPTIONS:** The provisions of this rule shall not apply to:

307.1 Organic solvent manufacturing facilities and the overland transport of organic solvents and materials containing VOC.

307.2 The use of equipment, materials, and/or substances which meet applicable requirements and standards specified by other rules of Regulation III.

307.3 The spraying or other employment of insecticides, pesticides or herbicides.

307.4 Foundries; smelters; melting or roasting of metal, ore, or dross; all operations included under Standard Industrial Classification codes 3312, 3313, 332, 333, 334, 336, and 3398; and all on-site mold making activities at such operations and industries.

SECTION 400 – ADMINISTRATIVE REQUIREMENTS

401 **COMPLIANCE SCHEDULE:** Any person employing a control device as of September 21, 1992, to meet the emissions reductions requirement of this rule shall by November 20, 1992, file an Operation and Maintenance Plan with the Control Officer pursuant to Section 501 of this rule.

SECTION 500 – MONITORING AND RECORDS

501 **PROVIDING AND MAINTAINING MONITORING DEVICES:** Any person incinerating, adsorbing, or otherwise processing organic materials pursuant to this rule shall provide, properly install and maintain in calibration, in good working order and in operation, devices specified in the Operation and Maintenance Plan as well as in either the Permit to Operate or the Installation Permit for indicating temperatures, pressures, rates of flow, or other operating conditions necessary to determine if air pollution control equipment is functioning properly and is properly maintained.

502 **DETERMINATION OF COMPLIANCE:** Determination of the organic solvent content and composition of a solvent or material shall be made as of the time that the solvent or material is in its final form for application or employment, notwithstanding any prior blending, reducing, thinning or other preparation for application or employment. Emissions resulting from air or heat drying of products for the first 12 hours after the removal from any machine, equipment, device or other article shall be included in determining compliance with this rule.

503 **RECORDKEEPING AND REPORTING:** Any person subject to this rule shall comply with the following requirements. Records shall be retained for five years and shall be made available to the Control Officer upon request.

503.1 **Current List:** Maintain a current list of coatings, adhesives, makeup solvents, and any other VOC-containing materials; state the VOC content of each in pounds per gallon or grams per liter. VOC content shall be expressed less water and non-precursor compounds for materials which are not used for cleaning or cleanup.

503.2 **Monthly Usage Records:** Maintain monthly records of the amount of each coating; adhesive; makeup solvent; solvent used for surface preparation, for cleanup, and for the removal of materials; and any other VOC-containing

material used. Identify any materials subject to the emission limits in Section 301 or Section 302 and keep separate totals for these materials.

503.3 **Operation and Maintenance:** Maintain a continuous record of the times an approved emission control device is used to comply with this rule. Maintain daily records of the O&M Plan's key system operating parameters. Account for any periods of operation when the control device was not operating. Maintain records of all maintenance performed according to the O&M Plan.

503.4 **Discarded Materials:** Maintain records of the type, amount, and method of disposing of VOC-containing materials on each day of disposal.

504 TEST METHODS:

504.1 Measurement of VOC content of materials shall be conducted and reported in accordance with EPA Test Method 24 (40 CFR 60, Appendix A).

504.2 The non-complying organic compound content shall be determined using the ASTM Standard Recommended Practices for General Gas Chromatography Procedures, E 260-85; General Techniques of Infrared Quantitative Analysis, E 168-67; or General Techniques of Ultraviolet Quantitative Analysis, E 169-87.

504.3 Measurements of the water and exempt solvent vapor content shall be conducted in accordance with ASTM Test Methods D 4457-85 and D 3792-86.

504.4 Measurement of VOC emissions subject to this rule shall be conducted in accordance with EPA Test Method 18 and/or by EPA Method 25 or an applicable sub-method of Method 25 (40 CFR 60, Appendix A), in combination with the appropriate capture efficiency method.

504.5 Capture/control efficiency shall be determined by mass balance in combination with ventilation/draft rate determinations or by "Using a Temporary Total Enclosure for Capture Efficiency Testing", EPA-450/4-91-020.

504.6 Ventilation/draft rates shall be determined by EPA Methods 2, 2a, 2c, and 2d.

504.7 Temperature measurements shall be done with an instrument with an accuracy and precision of less than one-half degree Fahrenheit (0.25°C) for temperatures up to 480°F (250°C). Higher temperatures shall be determined by instruments no less accurate than 1.0 percent of full scale unless the Control Officer specifies greater accuracy.

REGULATION III – CONTROL OF AIR CONTAMINANTS
RULE 331
SOLVENT CLEANING

INDEX

SECTION 100 – GENERAL

101 PURPOSE

102 APPLICABILITY

SECTION 200 – DEFINITIONS

201 AGITATION, AGITATED

202 BATCH CLEANING MACHINE

203 BLASTING/MISTING WITH SOLVENT

204 CABINET STYLE CLEANING MACHINES

205 CARRY-OUT

206 CLEANING-SOLVENT

207 CONFORMING SOLVENT

208 DEGREASER

209 DRY SOLID

210 EMISSION CONTROL SYSTEM (ECS)

211 FLUSHING WITH SOLVENT

212 FREEBOARD HEIGHT

213 FREEBOARD RATIO

214 HEATED SOLVENT

215 IMPERVIOUS

216 IN-LINE CLEANING MACHINE (CONTINUOUS CLEANING MACHINE)

217 JANITORIAL CLEANING

218 LEAK

219 LOW-VOC CLEANER

220 MAKE-UP SOLVENT

221 MATERIAL VOC CONTENT

222 NON-CONFORMING SOLVENT

223 ORGANIC COMPOUND

224 REFRIGERATED FREEBOARD CHILLER

225 REMOTE RESERVOIR CLEANING MACHINE (DEGREASER)

226 SEALED SYSTEM

227 SOLVENT

228 SOLVENT CLEANING MACHINE (CLEANING MACHINE) (DEGREASER)

229 SOLVENT/AIR INTERFACE

230 SOLVENT/AIR INTERFACE AREA

231 TOTAL VOC VAPOR PRESSURE (VOC COMPOSITE PARTIAL PRESSURE)

232 VAPOR CLEANING MACHINE

233 VOC CONTENT OF MATERIAL

234 WIPE CLEANING

SECTION 300 – STANDARDS

301 SOLVENT HANDLING REQUIREMENTS

302 EQUIPMENT REQUIREMENTS FOR ALL CLEANING MACHINES

303 SPECIFIC OPERATING & SIGNAGE REQUIREMENTS FOR CLEANING MACHINES

304 SOLVENT SPECIFICATIONS FOR NON-VAPOR CLEANING AND DEGREASING

305 NON-VAPOR BATCH CLEANING MACHINES

306 NON-VAPOR IN-LINE CLEANING MACHINES

307 SPECIAL NON-VAPOR CLEANING SITUATIONS

308 EXEMPTIONS

309 REQUIREMENTS FOR AIR POLLUTION CONTROL EQUIPMENT AND ECS MONITORING EQUIPMENT

SECTION 400 – ADMINISTRATIVE REQUIREMENTS (NOT APPLICABLE)

SECTION 500 – MONITORING AND RECORDS

501 RECORDKEEPING AND REPORTING

502 COMPLIANCE DETERMINATION AND TEST METHODS

APPENDIX TO RULE 331

VAPOR CLEANING MACHINES AND EMISSION CONTROL SYSTEMS

Revised 07/13/88
Revised 06/22/92
Revised 06/19/96
Revised 04/07/99
Revised 04/21/04
Revised 09/25/13

MARICOPA COUNTY
AIR POLLUTION CONTROL REGULATIONS

REGULATION III – CONTROL OF AIR CONTAMINANTS

RULE 331
SOLVENT CLEANING

SECTION 100 – GENERAL

101 **PURPOSE:** To limit the emissions of volatile organic compounds (VOCs) from cleaning operations.

102 **APPLICABILITY:** This rule is applicable to operations using VOC-containing solvents to remove impurities from exterior or interior surfaces. Compliance with the provisions of this rule shall not relieve any person subject to the requirements of this rule from complying with any other federally enforceable requirements. In such case, the more stringent requirement shall apply. In any instance where more than one of the requirements set forth in this rule may be applicable, the most restrictive requirement shall apply.

102.1 Solvents regulated by this rule may also be regulated by New Source Performance Standards (NSPS) in Rule 360 of these rules and/or National Emission Standards for Hazardous Air Pollutants (NESHAPs) in Rule 370 of these rules.

102.2 This rule is not applicable to:

a. A solvent cleaning operation that is subject to or specifically exempted by an EPA approved version of another rule within Regulation III of these rules.

b. Janitorial cleaning.

c. Testing for surface cleanliness or the cleaning of laboratory equipment at the laboratory.

d. A cleaning-solvent that meets any of the following:

(1) Is composed of at least 98% water by either weight or volume; or

(2) Contains only water and material which is a dry solid before mixing with water; or

(3) Has a VOC content not exceeding 20 grams per liter (0.17 lb/gal).

102.3 Partial or conditional exemptions from this rule are set forth in Section 308 of this rule.

SECTION 200 – DEFINITIONS: For the purpose of this rule, the following definitions shall apply, in addition to those definitions found in Rule 100 (General Provisions and Definitions) of these rules. In the event of any inconsistency between any of the Maricopa County air pollution control rules, the definitions in this rule take precedence.

201 **AGITATION, AGITATED:** A means or state that moves cleaning liquid continuously back and forth, or up and down. This includes such motion created by sound waves, and to the splashing of a rinse stream operated at a pressure that creates a trajectory exceeding 2 feet along the horizontal plane intersecting the nozzle when the nozzle is at a 45° angle above the plane. Liquid motion incidental to a continuous entrance or withdrawal of objects undergoing cleaning is not agitation.

202 **BATCH CLEANING MACHINE:** A solvent cleaning machine in which individual parts or a set of parts move through the entire cleaning cycle before new parts are introduced into the solvent cleaning machine. A solvent cleaning machine, such as a ferris wheel or a cross-rod degreaser, that cleans multiple batch loads simultaneously and is manually loaded, is a batch cleaning machine.

203 **BLASTING/MISTING WITH SOLVENT:** Cleaning with an applicator that propels cleaning-solvent through the air with a pressure exceeding 10 psig (516 mm Hg), or that atomizes the solvent into mist and/or droplets.

204 **CABINET STYLE CLEANING MACHINES:** Cleaning machines typically similar in design to domestic dishwashers that are completely enclosed except for optional stack, and have their own reservoir and sump.

205 **CARRY-OUT:** Solvent carried out of a cleaning machine along with a part being removed from the cleaning machine. The solvent may exist as a liquid coating the part or the part's hanger, or as a liquid entrapped in cavities and irregular surfaces, or entrapped by capillary action within or on the part.

206 **CLEANING-SOLVENT:** Solvent used for cleaning that contains more than 2.0% VOC by weight and more than 20 grams of VOC per liter (0.17 lb/gal).

207 **CONFORMING SOLVENT:** A cleaning-solvent having a total VOC vapor pressure at 68°F (20°C) not exceeding 1 millimeter of mercury column.

208 **DEGREASER:** See **SOLVENT CLEANING MACHINE.**

209 **DRY SOLID:** Any substance that appears and feels dry. Evaporating solids, all of which have a strong odor, are not included.

210 **EMISSION CONTROL SYSTEM (ECS):** A system for reducing emissions of volatile organic compounds, consisting of both a capture system and control device(s).

211 **FLUSHING WITH SOLVENT:** Introducing cleaning-solvent directly into the internal space(s) of an object or assembly using a hose or pipe. Rinsing the outside of an object or assembly and swishing an object or assembly in cleaning solvent are not considered flushing with solvent. Such activities must comply with Section 303.1 of this rule.

212 **FREEBOARD HEIGHT:**

212.1 **Batch Cleaning Machine:** The vertical distance from the solvent/air interface to the least elevated point of the top-rim when the cover is open or removed, measured during idling mode.

212.2 **In-Line Cleaning Machine:** The vertical distance from the solvent/air interface to the lowest entry/exit point, measured during idling mode.

213 **FREEBOARD RATIO:** The ratio of the solvent cleaning machine freeboard height to the smaller interior dimension (length, width, or diameter) of the solvent cleaning machine.

214 **HEATED SOLVENT:** Any cleaning-solvent which is heated by a device to a temperature exceeding 120°F (49°C).

215 **IMPERVIOUS:** Neither absorbing, adsorbing, nor allowing penetration through, by liquid or vapors.

216 **IN-LINE CLEANING MACHINE (CONTINUOUS CLEANING MACHINE):** A solvent cleaning machine that uses an automated handling system, typically a conveyor or automated arm(s), to automatically provide a continuous supply of items to be cleaned. The cleaned item leaves by a route different from its entry route.

217 **JANITORIAL CLEANING:** The cleaning of building or facility components to keep work areas in clean condition. Building or facility components include, but are not limited to, floors, ceilings, walls, windows, doors, stairs, bathrooms, furnishings, textiles, wash rags, uniforms, and exterior surfaces of office equipment.

218 **LEAK:** The state or condition in which a cleaning-solvent, excluding a Low-VOC Cleaner, is allowed to seep or drip, or otherwise enters or escapes, at either of the following rate or magnitude:

218.1 Three or more drops of liquid cleaning-solvent per minute; or

218.2 Any puddle of cleaning-solvent greater than 1 square inch.

219 **LOW-VOC CLEANER:** Any solution or homogeneous suspension that, as used, contains less than 50 grams of VOC per liter of material (0.42 lb VOC/gal) or is at least 95% water by weight or volume as determined by an applicable test method in Section 502 of this rule.

220 **MAKE-UP SOLVENT:** A cleaning-solvent that replaces solvent lost through evaporation or other means, and that is added to the solvent remaining in a cleaning machine (degreaser) to bring solvent quantity to the desired level.

221 **MATERIAL VOC CONTENT:** See **VOC CONTENT OF MATERIAL**.

222 **NON-CONFORMING SOLVENT:** A cleaning-solvent having a total VOC vapor pressure at 68°F (20°C) exceeding 1 millimeter of mercury column.

223 **ORGANIC COMPOUND:** Any compound of carbon, excluding carbon monoxide, carbon dioxide, carbonic acid, metallic carbides or carbonates, and ammonium carbonate.

224 **REFRIGERATED FREEBOARD CHILLER:** A control device which is mounted above any cooling-water jacket or primary condenser coils, consisting of secondary coils which carry a refrigerant to provide a chilled air blanket above the solvent vapor/air interface to reduce emissions from the cleaning machine (degreaser) bath.

225 **REMOTE RESERVOIR CLEANING MACHINE (DEGREASER):** Any non-vapor cleaning machine (degreaser) in which the reservoir for storing the cleaning-solvent is completely separated by impervious surfaces from the sink or basin where cleaning is performed, except for a connecting tube through which solvent returns to the reservoir when cleaning is stopped.

226 **SEALED SYSTEM:** An Air-tight or Airless Cleaning System that is operated and equipped pursuant to Section 304.3 of this rule.

227 **SOLVENT:** For the purpose of this rule, any liquid or vapor which is used to dissolve, clean, strip, or remove impurities, coatings, contaminants, or films from surfaces or from internal spaces and voids. In addition to VOC-containing solvents, this also includes plain water and mixtures containing water.

228 **SOLVENT CLEANING MACHINE (CLEANING MACHINE) (DEGREASER):** Any liquid container and ancillary equipment designed to clean surfaces and/or remove surface contaminants using cleaning-solvents.

229 **SOLVENT/AIR INTERFACE:**

229.1 **Non-Vapor Cleaner:** The location of contact between the liquid solvent and the air.

229.2 **Vapor Cleaner:** The location of contact between the concentrated layer of solvent vapor and the air.

230 SOLVENT/AIR INTERFACE AREA:

230.1 Non-Vapor Cleaner:

a. **With Included/Integral Reservoir:** The surface area of liquid cleaning-solvent that is exposed to the air.

b. **With Remote Reservoir:** The surface area of the solvent sink or work area.

230.2 Vapor Cleaner: The area of the horizontal plane that is located halfway between the highest and lowest points of the primary condenser coils and which contacts the interior walls of the cleaning machine.

231 TOTAL VOC VAPOR PRESSURE (VOC COMPOSITE PARTIAL PRESSURE): Within a solution or homogenous mixture, it is the sum of the partial pressures of all those components that are defined as VOCs, calculated according to the formula in Section 502.3 of this rule.

232 VAPOR CLEANING MACHINE: Any cleaning machine in which solvent-vapor from boiling cleaning solvent is utilized for cleaning object.

233 VOC CONTENT OF MATERIAL (MATERIAL VOC CONTENT):

VOC CONTENT OF MATERIAL as a percent = $\frac{W_s - W_w - W_{es}}{W_m}$ X 100%

Using consistently either pounds or grams in the calculations:

Where:

W_s = weight of volatile material in pounds (or grams), including water, non-precursor organic compounds, and dissolved vapors.

W_w = weight of water in pounds (or grams)

W_{es} = total weight of non-precursor organic compounds in pounds (or grams)

W_m = weight of total material in pounds (or grams)

VOC CONTENT OF MATERIAL in pounds per gallon (g/l) = $\frac{W_s - W_w - W_{es}}{V_m}$

Using consistently either English or metric measures in the calculations

Where:

W_s = weight of all volatile material in pounds (or grams) including VOC, water, non-precursor organic compounds and dissolved vapors.

W_w = weight of water in pounds (or grams)

W_{es} = weight of all non-precursor compounds in pounds (or grams)

V_m = volume of total material in gallons (or liters)

234 **WIPE CLEANING:** That method of removing contaminants from a surface by physically rubbing or automatically rubbing with a porous or absorbent material, such as a rag, paper, sponge, or cotton swab, moistened with a solvent.

SECTION 300 – STANDARDS

301 **SOLVENT HANDLING REQUIREMENTS:** Any person to whom this rule applies must comply with all of the following:

301.1 All cleaning-solvent, including solvent soaked materials, shall be kept in closed, leak free, impervious containers that are opened only when adding or removing material.

a. Porous or absorbent materials used for wipe cleaning shall be stored in closed containers when not in use.

b. Each container shall be clearly labeled with its contents.

301.2 If any cleaning-solvent escapes from a container:

a. Wipe up or otherwise remove immediately if in accessible areas.

b. For areas where access is not feasible during normal production, remove as soon as reasonably possible.

301.3 Unless records show that VOC-containing cleaning material was sent offsite for legal disposal, it will be assumed that it evaporated on site.

302 **EQUIPMENT REQUIREMENTS FOR ALL CLEANING MACHINES:** Any person operating a cleaning machine to which this rule applies must comply with all of the following:

302.1 Provide a leak free, impervious container (degreaser) for the solvents and the articles being cleaned.

a. The VOC-containment portion shall be impervious to VOC-containing liquid and vapors.

b. No surface of any freeboard required by this rule shall have an opening or duct through which VOC can escape to the atmosphere, except as controlled by an ECS, or as required by OSHA.

302.2 Properly maintain and operate all cleaning machine equipment required by this rule and any of its emission controls required by this rule.

303 SPECIFIC OPERATING & SIGNAGE REQUIREMENTS FOR CLEANING MACHINES: Any person who cleans with cleaning-solvent other than a Low-VOC Cleaner must conform to all of the following operating requirements:

303.1 Operating Requirements:

a. Fans: Do not locate nor position comfort fans in such a way as to direct airflow across the opening of any cleaning machine.

b. Cover: Do not remove any device designed to cover the solvent unless processing work in the cleaning machine or maintaining the machine.

c. Draining: Drain cleaned parts for at least 15 seconds after cleaning or until dripping ceases, whichever is later.

d. Spraying: If using a cleaning-solvent spray system,

(1) Use only a continuous, undivided stream (not a fine, atomized, or shower type spray).

(2) Pressure at the orifice from which the solvent emerges shall not exceed 10 psig and shall not cause liquid solvent to splash outside of the solvent container.

(3) In an in-line cleaning machine, a shower-type spray is allowed, provided that the spraying is conducted in a totally confined space that is separated from the environment.

(4) Exceptions to foregoing Sections 303.1d(1), (2), and (3) are provided for in Section 307 of this rule.

e. Agitation: No person shall cause agitation of a cleaning-solvent in a cleaning machine by sparging with air or other gas. Covers shall be placed over ultrasonic cleaners when the cleaning cycle exceeds 15 seconds.

f. No Porous Material:

(1) Do not clean nor use porous or absorbent materials to clean parts or products in a cleaning machine. For the purpose of this rule, porous or absorbent materials include, but are not limited to, cloth, leather, wood, and rope.

(2) Do not place an object with a sealed wood handle, including a brush, in or on a cleaning machine.

(3) Do not place porous or absorbent materials, including, but not limited to, cloth, leather, wood, and rope on a cleaning machine.

g. Vent Rates: The ventilation rate at the cleaning machine shall not exceed 65 cfm per square foot of evaporative surface (20 m^3/min./m^2), unless that rate must be changed to meet a standard specified and certified by a Certified Safety Professional, a Certified Industrial Hygienist, or a licensed professional engineer experienced in ventilation, to meet health and safety requirements.

h. Hoist Speed: Limit the vertical speed of mechanical hoists moving parts in and out of the cleaning machine to a maximum of 2.2 inches per second and 11 ft/min. (3.3 m/min.).

i. Contamination Prevention: Prevent cross contamination of solvents regulated by Section 304 of this rule with solvents that are not so regulated. Use signs, separated work-areas, or other effective means for this purpose. This includes those spray gun cleaning solvents that are regulated by another rule of these rules.

j. Filtration Devices: If a filtration device (e.g., to remove oils, greases, sludge, and fine carbon from cleaning solvent) is inherent in the design of the cleaning machine, then such filtration device shall be operated in accordance with manufacturer's specifications and in accordance with the following requirements:

(1) The filtration device shall be fully submerged in cleaning solvent at all times during filtration.

(2) When the filtration device is completely saturated and must be removed from the cleaning machine, the filtration device shall be drained until no liquid can flow from the filtration device. Draining and drying such filtration device shall be conducted in a sealed container with no exhaust to the atmosphere or work area.

(3) After the filtration device is dry, the filtration device shall be stored in a closed, leak free, impervious container that is legibly labeled with its contents and that remains covered when not in use. Disposal of the filtration device shall be done in a manner that inhibits VOC evaporation and that is in compliance with appropriate/legal methods of disposal.

303.2 Signage Requirements: Any person who uses cleaning-solvent, other than Low-VOC Cleaner, in any solvent cleaning machine (degreaser) or dip tank shall provide on the machine, or within 3¼ feet (1 meter) of the machine, a permanent, conspicuous label or placard which includes, at a minimum, each of the following applicable instructions, or its equivalent:

a. "Keep cover closed when parts are not being handled." (This is not required for remote reservoir cleaners.)

b. "Drain parts until they can be removed without dripping."

c. "Do not blow off parts before they have stopped dripping."

d. "Wipe up spills and drips as soon as possible; store used spill rags [or 'wiping material'] in covered container."

e. **"**Don't leave cloth or any absorbent materials in or on this tank."

f. For cleaning machines with moving parts such as hoists, pumps, or conveyors, post: "Operating instructions can be obtained from _____," listing a person or place where the instructions are available.

304 SOLVENT SPECIFICATIONS FOR NON-VAPOR CLEANING AND DEGREASING: [Operating requirements specifically for vapor cleaning machines are in the Appendix.] All cleaning solvents, except Low-VOC Cleaners, used in non-boiling cleaning machines shall comply with Section 304.1 or Section 304.2 or Section 304.3, as follows:

304.1 Use a cleaning-solvent having a total VOC vapor pressure at 68°F (20°C) not exceeding 1 millimeter of mercury column, as determined by the standards described in Section 500 of this rule.

304.2 **ECS:** Use an ECS to capture and process VOC emissions in accordance with Section IV of the Appendix within this rule; or

304.3 **Sealed System:** Use a Sealed System that is an Air-tight or Airless Cleaning System which is operated according to the manufacturer's specifications and, unless otherwise indicated by the manufacturer, meets all of the following requirements:

a. Has a door or other pressure-sealing apparatus that is shut during each cleaning and drying cycle; and

b. Has a differential pressure gauge that always indicates the pressure in the sealed chamber when occupied or in active use; and

c. Any associated pressure relief device(s) shall be so designed and operated as to prevent liquid cleaning-solvents from draining out.

305 NON-VAPOR BATCH CLEANING MACHINES: Equipment requirements for non-vapor batch cleaning machines with remote reservoirs are set forth in Section 305.1 of this rule. Equipment standards applicable to non-vapor batch cleaning machines with internal reservoirs (non-remote) are set forth in Section 305.2 of this rule. Non-vapor batch cleaning machines with either remote or internal reservoirs that use cleaning-solvents that are either heated, agitated or non-

conforming are subject to additional provisions set forth in Section 305.3 of this rule. Low-VOC Cleaners are exempt from this section.

305.1 With Remote Reservoir: A batch cleaning machine with remote reservoir, including cabinet type(s), shall be equipped with the following:

a. A sink-like work area or basin which is sloped sufficiently towards the drain so as to prevent pooling of cleaning-solvent.

b. A single, unimpeded drain opening or cluster of openings served by a single drain for the cleaning-solvent to flow from the sink into the enclosed reservoir. Such opening(s) shall be contained within a contiguous area not larger than 15.5 square inches (100 cm^2).

c. Solvent Return: Provide a means for drainage of cleaned parts such that the drained solvent is returned to the cleaning machine.

305.2 With Internal Reservoir (Non-Remote): A batch cleaning machine without a remote reservoir shall be equipped with all of the following:

a. Have and use an internal drainage rack or other assembly that confines within the freeboard all cleaning-solvent dripping from parts and returns it to the hold of the cleaning machine (degreaser); and

b. Have an impervious cover which when closed prevents cleaning-solvent vapors in the cleaning machine from escaping into the air/atmosphere when not processing work in the cleaning machine.

(1) A cover shall be fitted so that in its closed position the cover is between the cleaning-solvent and any lip exhaust or other safety vent, except that such position of cover and venting may be altered by an operator for valid concerns of flammability established in writing and certified to by a Certified Safety Professional or a Certified Industrial Hygienist to meet health and safety requirements.

(2) A cover is not required when an ECS is used in accordance with Section IV of the Appendix within this rule.

c. In the absence of additional applicable freeboard standards, freeboard height shall be not less than 6 inches (15.2 cm); and

d. The freeboard zone shall have a permanent, conspicuous mark that locates the maximum allowable solvent level which conforms to the applicable freeboard requirements.

305.3 Using Cleaning-Solvent that is Heated, Agitated, or is Non-Conforming: If a cleaning machine uses a cleaning-solvent at a temperature above 120°F (49°C), uses non-conforming solvent if allowed by Section

305.3(d) of this rule, or agitates the solvent, then comply with one of the following:

a. **Remote Reservoir Cleaning Machines:** For a remote reservoir cleaning machine, comply with Section 305.1 of this rule and one of the following:

   (1) Use a stopper in the drain whenever the sink or cabinet is empty of solvent and nothing is being handled in the sink; or

   (2) Cover the sink or cabinet whenever the sink or cabinet is empty of solvent and nothing is being handled in the sink.

b. **Internal Reservoir Cleaning Machines:** For an internal reservoir cleaning machine, comply with Section 305.2 of this rule and either Section (1) or (2) that follow:

   (1) A Water Cover: A floating layer of water (insoluble in the solvent) at least 1 inch thick, and a freeboard at least 6 inches above the top of the solvent shall be present; or

   (2) Freeboard and Cover:

      (a) The basin shall have a freeboard ratio of 0.75 or greater and an impervious cover shall cover the basin whenever work is not being processed; and

      (b) If a non-conforming solvent is used, the cover shall be of a sliding or rolling type which is designed to easily open and close in a horizontal plane without disturbing the vapor zone.

c. **Cabinet Style:** Keep a cabinet-style cleaning machine closed at all times that it contains cleaning-solvent, except when introducing or removing work from the machine. If blasting or misting with cleaning-solvent, also conform to the applicable requirements of Section 307 of this rule.

d. **Non-Conforming Solvent:** A non-conforming solvent may be used in operations to which this rule applies, if at least one of the following is met:

   (1) The emissions from the operation shall be controlled by an ECS per Section 304.2 of this rule or by a Sealed System per Section 304.3 of this rule; or

   (2) The operation is exempted per Section 308.2 of this rule; or

   (3) The operation is both exempted per Section 308.3 of this rule and complies with Section 305.3 of this rule, or for in-line machines,

complies with all of Section 306 of this rule except Section 306.4 of this rule.

305.4 ECS Alternative: An owner and/or operator is allowed to meet the requirements of any one or combination of the requirements of Sections 305.1, 305.2 and/or 305.3 of this rule by operating an ECS in accordance with Section IV of the Appendix within this rule whenever any requirement of Sections 305.1, 305.2 and/or 305.3 of this rule is not met.

306 NON-VAPOR IN-LINE CLEANING MACHINES: No person shall operate a non-vapor in-line cleaning machine using cleaning-solvent unless it complies with Sections 306.1, 306.2, and 306.3 of this rule:

306.1 Features:

a. **Carry-Out Prevention:** Equip the cleaning machine with either a drying tunnel or another means, such as a rotating basket, sufficient to prevent cleaned parts from carrying out cleaning-solvent liquid or vapor.

b. **Enclosed Design:** An in-line cleaning machine shall be fully enclosed except for entrance and exit portals.

c. **Cover:** During shutdown hours or if the cleaning machine is idle for more than 30 minutes, a cover shall be used to close the entrance and exit and any opening greater than 16 square inches (104 cm^2).

306.2 Minimized Openings: Entrances and exits should silhouette workloads so that the average clearance between parts and the edge of the cleaning machine opening is either less than four inches (10 cm), or less than 10% of the width of the opening.

306.3 The machine shall have a freeboard ratio greater than or equal to 0.75.

306.4 ECS Alternative: An owner and/or operator is allowed to meet the requirements of any one or combination of Sections 306.1(b), 306.1(c), 306.2, and/or 306.3 of this rule by operating an ECS that controls VOC vapor from processes addressed by the requirement(s). Such ECS shall be operated in accordance with Section IV of the Appendix within this rule.

307 SPECIAL NON-VAPOR CLEANING SITUATIONS:

307.1 Blasting/Misting with Conforming Solvent: Any person blasting or misting with conforming solvent shall operate and equip the device(s) as follows:

a. **Equipment:** The device shall have internal drainage, a reservoir or sump, and a completely enclosed cleaning chamber, designed so as to prevent any perceptible liquid from emerging from the device; and

b. Operation: The device shall be operated such that there is no perceptible leakage from the device except for incidental drops from drained, removed parts.

307.2 Blasting/Misting with Non-Conforming Solvent: Any person shall use a Sealed System pursuant to Section 304.3 of this rule for all blasting or misting with a non-conforming solvent.

307.3 High Pressure Flushing: Cleaning systems using cleaning-solvent that emerges from an object undergoing flushing with a visible mist or at a pressure exceeding 10 psig, shall comply as follows:

a. Conforming Solvent: For conforming solvent, use a containment system that is designed to prevent any perceptible cleaning-solvent liquid from becoming airborne outside the containment system, such as a completely enclosed chamber.

b. Non-Conforming Solvent: Use a Sealed System for non-conforming solvent.

307.4 ECS Alternative: An owner and/or operator is allowed to meet the requirement(s) of Section 307.1 and/or Section 307.2 of this rule by operating an ECS that controls VOC vapor from processes addressed by the requirement(s). The ECS shall be operated pursuant to Section IV of the Appendix within this rule.

308 EXEMPTIONS:

308.1 Categorical Exemptions:

a. Industries and cleaning operations that are not regulated by this rule include, but are not limited to, the following EPA approved versions of the VOC rules in Regulation III of these rules:

(1) Dry cleaning with petroleum solvents (Rule 333);

(2) Printing and graphic arts coating (Rule 337);

(3) Semiconductor manufacturing (Rule 338);

(4) Automotive windshield washer fluid (Rule 344); and

(5) Architectural Coating (Rule 335).

b. All operations regulated by the following NESHAPs are exempt from Rule 331:

(1) National Emission Standards for Halogenated Solvent Cleaning (40 CFR 63, subpart T). This includes the de minimis amounts of solvent VOCs that are exempted by subpart T.

(2) National Emission Standards for Perchloroethylene for Dry Cleaning Facilities, (40 CFR 63, subpart M).

c. Exemptions for Qualified Operations:

(1) Cleanup of Coating-Application Equipment: Operations involving the cleanup of coating-application equipment that are subject to or specifically exempted by an EPA approved version of another rule in Regulation III of these rules are exempt from Rule 331. Examples include Rule 336 (Surface Coating Operations), Rule 342 (Coating Wood Furniture and Fixtures), and Rule 346 (Coating Wood Millwork).

(2) Aerospace: Wipe cleaning of aerospace components is subject to Rule 348 of these rules, whereas the cleaning of aerospace components in a dip tank or a cleaning machine is subject to Rule 331.

308.2 Partial Exemption from Section 300: The following are exempt from sections of Section 300 of this rule as noted:

a. Wipe Cleaning: The provisions of Sections 302 through 307 of this rule do not apply to wipe cleaning. Recordkeeping provisions in Section 500 of this rule do apply to wipe cleaning.

b. Small Cleaners: The provisions of Sections 303 through 307 of this rule shall not apply to any non-vapor cleaning machine (degreaser) or dip-tank fitting either of the following descriptions, except that these shall be covered when work is not being processed:

(1) A small cleaner having a liquid surface area of 1 square foot (0.09 square meters) or less, or

(2) A small cleaner having a maximum capacity of one gallon (3.79 liters) or less.

308.3 Exemptions from Section 304: The U.S. Government Printing Office "Standard Industrial Classification Manual, 1987" (and no future editions) is incorporated by reference and is on file at the Maricopa County Air Quality Department, 1001 N. Central Ave., Phoenix, Arizona 85004. The following are exempt from Section 304 of this rule:

a. Non-furniture medical devices included in Standard Industrial Classification (SIC) codes 3841, 3843, 3844, or 3845, and products for internal use in 3842;

b. Electronic products for space vehicles and communications equipment in SIC codes 3661, 3663, 3669, 3677, 3678, 3679, and 3769; and

c. Production processes having clean-room standards equal to or more stringent than class 100,000 (particles/m^3); and

d. Low viscosity solvent used to clean an aerospace component if the Federal Aviation Authority, the US Department of Defense, or a US Military specification designates that the cleanliness of the component is critical to the flight safety of a complete aerospace vehicle. By January 1, 2001, any such solvents shall be listed in a Maricopa County air pollution permit, conditioned upon a sufficient demonstration by the user that no compliant substitute exists.

308.4 **Comfort Fans:** The Section 303.1(a) prohibition against fans and fan-drafts being close to cleaning machines does not apply to a totally enclosed cleaning machine that cannot be penetrated by drafts.

308.5 **Vehicle Refinishing:** Dip cleaning of vehicle or mobile equipment surfaces is subject to this rule.

308.6 Aerosol cans, squirt bottles, and other solvent containers intended for handheld use shall meet the requirements in Sections 301 and 500 of this rule.

308.7 A Low-VOC Cleaner is subject only to Sections 301, 302, 307.1, 501.1(a), and 501.2 of this rule.

309 **REQUIREMENTS FOR AIR POLLUTION CONTROL EQUIPMENT AND ECS MONITORING EQUIPMENT:** For the purpose of this rule, an ECS shall be approved in writing by the Control Officer and shall be designed and operated in accordance with good engineering practices.

309.1 **Operation and Maintenance (O&M) Plan Required for ECS:**

a. **General Requirements:** An owner and/or operator shall provide and maintain (an) O&M Plan(s) for any ECS, any other emission processing equipment, and any ECS monitoring devices that are used pursuant to this rule or pursuant to an air pollution control permit. An owner and/or operator shall comply with all the identified actions and schedules provided in each O&M Plan.

b. **Approval by Control Officer of Initial O&M Plan(s):** An owner and/or operator shall submit to the Control Officer for written approval the O&M Plan(s) of each ECS and each ECS monitoring device that is used pursuant to this rule. While the Control Officer is reviewing for approval the O&M Plan(s), an owner and/or operator shall comply with all the identified actions and schedules provided in each O&M Plan submitted for approval, unless notified otherwise by the Control Officer.

After the Control Officer has issued written approval of the O&M Plan(s), an owner and/or operator shall continue to comply with all the identified actions and schedules provided in each O&M Plan.

c. **Owner and/or Operator Revisions to Initial O&M Plan(s):** If an owner and/or operator submits to the Control Officer revisions to the initial O&M Plan(s) and if such revisions have been approved in writing by the Control Officer, an owner and/or operator shall comply with the revisions to the initial O&M Plan(s).

d. **Control Officer Modifications to Initial O&M Plan(s):** After discussion with the owner and/or operator, the Control Officer may modify the O&M Plan(s) in writing prior to approval of the initial O&M Plan(s). An owner and/or operator shall then comply with the O&M Plan(s) that has been modified by the Control Officer.

309.2 Providing and Maintaining ECS Monitoring Devices: An owner and/or operator incinerating, adsorbing, or otherwise processing VOC emissions pursuant to this rule shall provide, properly install and maintain in calibration, in good working order and in operation, devices described in the facility's O&M Plan that indicate temperatures, pressures, rates of flow, or other operating conditions necessary to determine if air pollution control equipment is functioning properly and is properly maintained.

SECTION 400 – ADMINISTRATIVE REQUIREMENTS (NOT APPLICABLE)

SECTION 500 – MONITORING AND RECORDS

501 RECORDKEEPING AND REPORTING: Any person subject to this rule shall comply with the following requirements. Records shall be retained for five years and shall be made available to the Control Officer upon request.

501.1 Current List:

a. Maintain a current list of cleaning-solvents; state the VOC-content of each in pounds VOC per gallon of material or grams per liter of material.

b. A facility using any cleaning-solvent subject to the vapor-pressure limits of Section 304.1 of this rule shall have on site the written value of the total VOC vapor-pressure of each such solvent, in one of the following forms:

(1) A manufacturer's technical data sheet,

(2) A manufacturer's safety data sheet (MSDS), or

(3) Actual test results.

501.2 Usage Records:

a. **Monthly:** Records of the amount of cleaning-solvent used shall be updated by the end of month for the previous month. Show the type and amount of each make-up and all other cleaning-solvent to which this rule is applicable.

b. **Annually:**

(1) **Certain Concentrates:** Use of concentrate that is used only in the formulation of Low VOC Cleaner shall be updated at least annually.

(2) **Low-VOC Cleaner:** An owner and/or operator need not keep a record of a cleaning substance that is made by diluting a concentrate with water or non-precursor compound(s) to a level that qualifies as a Low VOC Cleaner if records of the concentrate usage are kept in accordance with this rule.

c. **Grouping by VOC Content:** For purposes of recording usage, an operator may give cleaning-solvents of similar VOC content a single group-name, distinct from any product names in the group. The total usage of all the products in that group is then recorded under just one name. (In such a case, the operator must also keep a separate list that identifies the product names of the particular solvents included under the group name). To the group name shall be assigned the highest VOC content among the members of that group, rounded to the nearest 10th of a pound of VOC per gallon of material, or to the nearest gram VOC per liter of material.

502 COMPLIANCE DETERMINATION AND TEST METHODS: When more than one test method is permitted for a determination, an exceedance of the limits established in the rule determined by any of the applicable test methods constitutes a violation of this rule.

502.1 Compliance Determination: The following means shall be used to determine compliance with this rule. For routine information collection, the Control Officer may accept a manufacturers' data sheet, data certified by an officer of the supplying company, or test data for the product model of inquiry.

a. **VOC Content:** The VOC content of solutions, dispersions, emulsions, and conforming solvents (reference Section 207 of this rule) shall be determined by one of the following methods:

(1) South Coast Air Quality Management District Method 313-91 as referenced in Section 502.2(f) of this rule; or

(2) Bay Area Air Quality Management District Method 31 as referenced in Section 502.2(e) of this rule; or

(3) Solids-free windshield washer solutions, in which all organic components are VOCs, may be tested using Maricopa County Reference Method #100, "Total Organic Carbon for Windshield Washer Fluids," Maricopa County Air Pollution Control Rule 344 (April 7, 1999). This method should only be used for water-based solutions containing less than 5% VOC by weight.

b. Vapor Pressure: Pursuant to Sections 304 and 207 of this rule, determination of the total VOC vapor-pressure (VOC composite partial-pressure) in a cleaning solution shall be performed as follows:

(1) For solutions known to be nearly or exactly 100% VOC, vapor pressure shall be determined by ASTM D2879-96 as referenced in Section 502.2(g) of this rule; or

(2) For solutions for which is known the exact quantity and chemical makeup of each evaporating component that is not a VOC, ASTM D2879-96 (referencing Section 502.2(g) of this rule) shall be used (to determine the gross composite vapor pressure) in conjunction with calculations using the vapor-pressure formula in Section 502.3 of this rule.

(3) When a solution's exact species and proportions are known for all ingredients, the Control Officer may use the formula in Section 502.3 of this rule in conjunction with standard reference texts or data-bases that provide the vapor pressure value of each constituent, or a combination of formula use and actual testing on real constituents (referencing Section 502.2(g) of this rule).

c. ECS Compliance:

(1) The VOC content of gaseous emissions entering and exiting an ECS shall be determined by either EPA Method 18 referred to in Section 502.2(b) of this rule, or EPA Methods 25, 25a, and 25b referred to in Section 502.2(c) of this rule.

(2) Capture efficiency of an emission control device used pursuant to Section 304.2, Section 305.4, Section 306.4, and/or Section 307.4 of this rule shall be determined either by the methods in Section 502.2(d) of this rule (EPA Methods 204, 204a, 204b, 204c, 204d, 204e, and 204f) or by using mass balance calculation methods in concert with the methods in Section 502.2(a) of this rule (EPA Methods 2, 2a, 2c, and 2d), and EPA guidance document, "Guidelines for Determining Capture Efficiency", January 9, 1995.

d. Temperature Measurement: Temperature measurements made pursuant to Section 214 of this rule to determine if a cleaning machine

contains a "heated solvent" shall be done with an instrument having an accuracy and precision of no less than 1 degree Fahrenheit.

502.2 Test Methods Adopted by Reference: The EPA test methods as they exist in the Code of Federal Regulations (CFR) (July 1, 2003), as listed below, are adopted by reference. The other test methods listed here are also adopted by reference, each having paired with it a specific date that identifies the particular version/revision of the method that is adopted by reference. These adoptions by reference include no future editions or amendments. Copies of test methods referenced in this Section 502 are available at the Maricopa County Air Quality Department, 1001 N. Central Ave., Phoenix, AZ, 85004.

a. EPA Methods 2 ("Determination of Stack Gas Velocity and Volumetric Flow Rate"), 2a ("Direct Measurement of Gas Volume Through Pipes and Small Ducts"), 2c ("Determination of Stack Gas Velocity and Volumetric Flow rate in Small Stacks or Ducts"), and 2d ("Measurement of Gas volumetric Flow Rates in Small Pipes and Ducts"). All 4 of the foregoing methods are in 40 CFR 60, Appendix A.

b. EPA Method 18 ("Measurement of Gaseous Organic Compound Emissions by Gas Chromatography") (40 CFR 60, Appendix A).

c. EPA Methods 25 ("Determination of Total Gaseous Non-methane Organic Emissions as Carbon"), 25a, and 25b (40 CFR 60, Appendix A).

d. EPA Test Methods 204 ("Criteria for and Verification Of a Permanent or Temporary Total Enclosure"), 204a, 204b, 204c, 204d, 204e, and 204f (40 CFR 51, Appendix M) and EPA guidance document, "Guidelines for Determining Capture Efficiency", January 9, 1995.

e. California's Bay Area Air Quality Management District (BAAQMD) Method 31 (April 15, 1992), "Determination of Volatile Organic Compounds in Paint Strippers, Solvent Cleaners, and Low Solids Coatings."

f. California's South Coast Air Quality Management District (SCAQMD) Method 313-91 (April 1997).

g. American Society for Testing and Materials (ASTM) Method D2879-96 (1996).

h. EPA guidance document, "Guidelines for Determining Capture Efficiency", January 9, 1995.

502.3 FORMULA FOR VOC COMPOSITE PARTIAL PRESSURE:
Equivalent to: **TOTAL VOC VAPOR-PRESSURE.**

$$PP_c = \frac{\sum_{i=1}^{n} (W_i)(VP_i)/M_i}{\frac{W_w}{18} + \sum_{j=1}^{m} \frac{W_e}{M_e} + \sum_{i=1}^{n} \frac{W_i}{M_i}}$$

W_i	=	Weight of the "*i*"th VOC compound in grams
W_w	=	Weight of water in grams
We	=	Weight of the "*j*"th non-precursor compound in grams
M_i	=	Molecular weight of the "*i*"th VOC compound in grams per gram mole, e.g., one gram-mole of isopropyl alcohol weighs 60 grams
M_e	=	Molecular weight of the "*j*"th non-precursor compound, e.g., 1 gram-mole of acetone weighs 58 grams
PP_c	=	VOC composite partial pressure at 20°C in mm mercury (Hg)
VP_i	=	Vapor pressure of the "*i*"th VOC compound at 20°C in mm Hg
18	=	Weight of one gram-mole of water

APPENDIX TO RULE 331

VAPOR CLEANING MACHINES and EMISSION CONTROL SYSTEMS

I. DEFINITIONS:

(1) **VAPOR LEVEL CONTROL SYSTEM:** A combination of a coolant sensing system and a vapor sensing system consisting of the following three sets of features:

(A) A condenser flow switch and thermostat which shuts off the sump heat if either the condenser coolant stops circulating or becomes warmer than 85°F (29°C); and

(B) A manually-reset safety switch which turns off the sump heater if the temperature sensor senses that the temperature is rising above the designed operating level at the vapor/air interface; and

(C) A manually-reset switch which turns off the spray-system pump if the level of the vapor/air interface drops more than 4 inches (10 cm).

II. BATCH-LOADED VAPOR CLEANING MACHINES:

(1) No person shall operate a batch vapor cleaning machine, unless the machine meets National Emission Standards for Halogenated Solvent Cleaning (subpart T, Rule 370), as if the cleaning solvent in use were subject to subpart T standards.

(2) No person shall operate a batch vapor cleaning machine, unless the machine has a vapor/air interface Fahrenheit temperature no greater than 30% of the solvent's boiling point temperature or no greater than 40.0°F (4.4°C), whichever is lower.

(3) Sections II(1) and II(2) of this Appendix shall not apply, if a batch vapor cleaning machine is equipped with all of the following:

(A) **Cover:** An impermeable cover that is a sliding, rolling, fanning, or guillotine (bi-parting) type which is designed to easily open and close without disturbing the vapor zone.

(B) **A Vapor Level Control System.**

(C) **Primary Condenser:** A primary condenser that maintains an exit temperature not exceeding 85°F (29°C) or is equipped pursuant to Section II(3)(F)(ii) of this Appendix.

(D) **Freeboard Ratio:** A freeboard ratio that is greater than or equal to 0.75.

(E) **Lip Exhausts:** Vapor cleaning machines with lip exhausts shall be controlled by an ECS.

(F) **Refrigeration or ECS:** Batch vapor cleaning machines having any of the following descriptors shall comply with Sections II(3)(F)(i), II(3)(F)(ii), or II(3)(f)(iii) of this Appendix:

- an evaporative surface area equal to or greater than 10.75 ft^2 (1.0 m^2); or
- installed or subject to major modification after November 1, 1999; or
- having average monthly VOC emissions exceeding 31 pounds VOC per square foot of solvent surface area:

(i) A refrigerated freeboard chiller for which the chilled air blanket temperature in degrees Fahrenheit at the coldest point on the vertical axis through the horizontal center of the vapor/air interface either shall be no greater than 30% of the initial boiling point of the solvent in degrees Fahrenheit or no greater than 40.0°F (4.4°C); or

(ii) A refrigerated condenser coil (in place of an unrefrigerated coil) having a minimum cooling capacity of 100% of the boiling-sump heat input rate and conforming to the air blanket temperature requirements pursuant to Section II(3)(F)(i); or

(iii) An ECS operated in accordance with Section IV of this Appendix.

(G) **Water Separator:** Water should not be visually detectable in the VOC containing solvent exiting the water separator.

(4) Sections II(1) and II(2) of this Appendix shall not apply, if a batch vapor cleaning machine meets all of the following:

(A) **Workloads:**

(i) A workload shall not occupy more than half of the cleaning machine's open-top area.

(ii) The workload shall not be so massive that the vapor level drops more than 4 inches (10 cm), when the workload is removed from the vapor zone.

(iii) The workload shall not be sprayed with cleaning-solvent above the vapor/air interface level.

(B) **Carry-Out:** Minimize cleaning-solvent carry-out by the following measures:

(i) Orient the items being cleaned in such a way that the items drain easily after cleaning.

(ii) Degrease the workload in the vapor zone at least 30 seconds or until condensation ceases.

(iii) For manual loading/unloading, tip out any pools of solvent on the cleaned parts before removal.

(iv) Allow parts to dry within the batch vapor cleaning machine until visually dry.

(C) **Startup and Shutdown:** The following sequence shall be used for startup and shutdown:

(i) When starting the batch vapor cleaning machine, the cooling system shall be turned on before, or simultaneously with, the sump heater.

(ii) When shutting down the batch vapor cleaning machine, the sump heater shall be turned off before, or simultaneously with, the cooling system.

(D) **Blasting:** Blasting in a batch vapor cleaning machine shall be done within a Sealed System or be controlled by an ECS.

(E) **Records:** An owner and/or operator operating a batch vapor cleaning machine shall keep records pursuant to Section 501 of this rule.

III. IN-LINE VAPOR CLEANING MACHINES:

(1) No person shall operate an in-line vapor cleaning machine, unless the machine meets National Emission Standards for Halogenated Solvent Cleaning (subpart T, Rule 370), as if the cleaning-solvent in use were subject to subpart T standards.

(2) No person shall operate an in-line vapor cleaning machine, unless the machine has a vapor/air interface Fahrenheit temperature no greater than 30% of the solvent's boiling point temperature or no greater than 40.0°F (4.4°C), whichever is lower.

(3) Sections III(1) and III(2) of this Appendix shall not apply, if an in-line vapor cleaning machine is equipped with all of the following:

(A) **Cover:** Within 10 minutes of turning off the solvent heating system, cover the entrance and exit and any opening greater than 16 square inches (104 cm^2).

(B) **Vapor Level Control System.**

(C) **Primary Condenser:** Have a primary condenser that maintains an exit temperature not exceeding 85°F (29°C).

(D) **Freeboard Ratio:** Have a freeboard ratio greater than or equal to 0.75.

(E) **Refrigeration or ECS:** In-line vapor cleaning machines having any of the following descriptors shall comply with Sections III(3)(E)(i), III(3)(E)(ii), or III(3)(E)(iii) of this Appendix:

- An evaporative surface area equal to or greater than 10.75 ft^2 (1.0 m^2); or
- Installed or subject to major modification after November 1, 1999, or
- Having average monthly VOC emissions exceeding 31 pounds VOC per square foot of solvent surface area:

(i) A refrigerated freeboard chiller for which the chilled air blanket temperature in degrees Fahrenheit at the coldest point on the vertical axis through the horizontal center of the vapor/air interface either shall be no greater than 30% of the initial boiling point of the solvent in degrees Fahrenheit or no greater than 40.0°F (4.4°C); or

(ii) A refrigerated condenser coil (in place of an unrefrigerated coil) having a minimum cooling capacity of 100% of the boiling-sump heat input rate and conforming to the air blanket temperature requirements pursuant to Section III(3)(E)(i) of this Appendix; or

(iii) An ECS operated in accordance with Section IV of this Appendix.

(F) **Water Separator:** Water should not be visually detectable in the VOC-containing solvent exiting the water separator.

(4) Sections III(1) and III(2) of this Appendix shall not apply, if the in-line vapor cleaning machine meets all of the following:

(A) **Workloads:** Entrances and exits should silhouette workloads so that the average clearance between parts and the edge of the in-line vapor cleaning machine opening is either less than 4 inches (10 cm) or less than 10% of the width of the opening.

(B) **Carry-Out:** Equip the in-line vapor cleaning machine with either a drying tunnel or another means, such as a rotating basket, sufficient to prevent cleaned parts from carrying out cleaning-solvent liquid or vapor.

(C) **Startup and Shutdown:** The following sequences shall be used for startup and shutdown:

(i) When starting the in-line vapor cleaning machine, the cooling system shall be turned on before, or simultaneously with, the sump heater.

(ii) When shutting down the in-line vapor cleaning machine, the sump heater shall be turned off before, or simultaneously with, the cooling system.

(D) **Records:** An owner and/or operator operating an in-line vapor cleaning machine shall keep records pursuant to Section 501 of this rule.

IV. EMISSION CONTROL SYSTEM REQUIREMENTS:

(1) An Emission Control System (ECS) used pursuant to this rule shall consist of a hood or enclosure to collect emissions, which are vented to a processing device. The overall control efficiency (capture plus processing) of the system shall not be less than 85%. The capture system shall have a ventilation rate no greater than 65 cfm per square foot of evaporative surface (20 m^3/min./m^2), unless that rate must be changed to meet a standard specified and certified by a Certified Safety Professional, a Certified Industrial Hygienist, or a licensed professional engineer experienced in ventilation-system design, that concerns health and safety requirements. The ECS shall be approved by the Control Officer.

(2) **Operation and Maintenance (O&M) Plan Required for ECS:** An owner and/or operator shall create and maintain an O&M Plan for any ECS required by this rule or pursuant to an air pollution control permit in accordance with Section 309 of this rule.

(3) **Recordkeeping:**

(A) **ECS Operation and Maintenance Records:** On each day that an ECS is used to comply with any provision of this rule, an owner and/or operator shall make a permanent record of the operating parameters of the key systems described in the O&M Plan. For each day or period in which the O&M Plan requires that maintenance be performed, a permanent record shall be made of the maintenance actions taken, within 24 hours of maintenance completion. An explanation shall be entered for scheduled maintenance that is not performed during the period designated in the O&M Plan.

(B) **Other Records Required when Complying via ECS:** An owner and/or operator using an ECS pursuant to this rule shall maintain, in addition to the records required by Section 501.1 of this rule, daily documentation showing the VOC content of the solvent material and the amount added for makeup.

(4) **Test Methods for Determining Emission Control System Compliance:** Test methods and compliance procedures for an ECS are in Section 502 of this rule.

REGULATION III - CONTROL OF AIR CONTAMINANTS

RULE 332

RESCINDED

(FORMERLY PERCHLOROETHYLENE DRY CLEANING)

REGULATION III – CONTROL OF AIR CONTAMINANTS

RULE 333
PETROLEUM SOLVENT DRY CLEANING

INDEX

SECTION 100 – GENERAL

101 PURPOSE

102 APPLICABILITY

SECTION 200 – DEFINITIONS

201 CARTRIDGE FILTER

202 CONTAINERS AND CONVEYORS OF SOLVENT

203 DRY CLEANING

204 PERCEPTIBLE LEAKS

205 PETROLEUM SOLVENT

206 SOLVENT RECOVERY DRYER

SECTION 300 – STANDARDS

301 OPERATING REQUIREMENTS

302 CONTROLS REQUIRED-SOLVENT RECOVERY DRYER

SECTION 400 – ADMINISTRATIVE REQUIREMENTS (NOT APPLICABLE)

SECTION 500 – MONITORING AND RECORDS

501 RECORDKEEPING AND REPORTING

502 COMPLIANCE DETERMINATION - TEST METHODS

Revised 07/13/88
Revised 06/22/92
Revised 06/19/96
Revised 09/25/13

MARICOPA COUNTY
AIR POLLUTION CONTROL REGULATIONS

REGULATION III – CONTROL OF AIR CONTAMINANTS

RULE 333
PETROLEUM SOLVENT DRY CLEANING

SECTION 100 – GENERAL

101 **PURPOSE:** To limit the emissions of volatile organic compounds from petroleum solvents used in dry cleaning.

102 **APPLICABILITY:** This rule applies to petroleum solvent washers, dryers, solvent filters, settling tanks, vacuum stills, and other containers and conveyors of petroleum solvent that are used in petroleum solvent dry cleaning facilities.

SECTION 200 – DEFINITIONS: For the purpose of this rule, the following definitions shall apply, in addition to those definitions found in Rule 100 (General Provisions and Definitions) of these rules. In the event of any inconsistency between any of the Maricopa County air pollution control rules, the definitions in this rule take precedence.

201 **CARTRIDGE FILTER:** Any perforated canister containing filtration paper, fabric and/or activated carbon that is used in a pressurized system to remove solid particles and fugitive dyes from soil-laden solvent.

202 **CONTAINERS AND CONVEYORS OF SOLVENT:** Any piping, ductwork, pumps, storage tanks, and other ancillary equipment that are associated with the installation and operation of washers, dryers, filters, stills and settling tanks.

203 **DRY CLEANING:** A process for the cleaning of textiles and fabric products in which articles are washed in non-aqueous solvent and then dried by exposure to a heated air stream.

204 **PERCEPTIBLE LEAKS:** Any petroleum solvent vapor, mist, or liquid leaks that are conspicuous from visual observation, such as pools or droplets of liquid, or buckets or barrels of solvent or solvent-laden waste standing open to the atmosphere.

205 **PETROLEUM SOLVENT:** Volatile organic compounds commonly produced by petroleum distillation, primarily comprising a hydrocarbon range of 8 to 12 carbon atoms per organic molecule.

206 SOLVENT RECOVERY DRYER: A class of dry cleaning dryers that employs a condenser to liquefy and recover solvent vapors evaporating in a closed-loop, recirculating stream of heated air.

SECTION 300 – STANDARDS

301 OPERATING REQUIREMENTS: A person shall not operate any petroleum solvent dry cleaning facility unless all of the following requirements are satisfied:

301.1 Liquid and Vapor Leaks: Dry cleaning equipment shall not be operated with perceptible leaks from any portion of the equipment, including but not limited to: hose connections, unions, couplings and valves; machine door gaskets and seating; filter head gaskets and seating; pumps; base tanks and storage containers; water separators; filter sludge recovery; distillation units; divertor valves; solvent-moistened lint from lint basket; and cartridge filters.

301.2 Solvent Storage: Solvents shall be stored in closed containers.

301.3 Access Vents: All washer and dryer traps, access doors, and any other parts of equipment where solvent may be exposed to the atmosphere, shall be kept closed at all times except when required for proper operation or maintenance.

301.4 Solvent Filtration: Any petroleum filtration system shall be installed and operated to comply with at least one of the following:

a. Reduce the volatile organic compounds in all filtration wastes to 2.2 lbs. (1 kg) or less per 220 lbs. (100 kg) dry weight of articles cleaned, before disposal, and exposure to the atmosphere; or

b. Install and operate a cartridge filtration system, and drain the filter cartridges in their sealed housings for eight hours or more before their removal; or

c. Place all discarded filtration material, including cartridges and particulate filter media, immediately in sealed containers and dispose of according to hazardous waste statutes.

302 CONTROLS REQUIRED – SOLVENT RECOVERY DRYER: Petroleum solvent dry cleaning facilities installed after July 13, 1988, shall have a solvent recovery that recovers at least 85 percent of petroleum solvent by weight. In addition, the recovery cycle for the dryer shall not be terminated until the petroleum solvent flow rate from the water separator is 15 milliliters or less per minute.

SECTION 400 – ADMINISTRATIVE REQUIREMENTS (NOT APPLICABLE)

SECTION 500 – MONITORING AND RECORDS

501 RECORDKEEPING AND REPORTING: Any person subject to this rule shall comply with the following requirements. Records shall be retained for five years and shall be made available to the Control Officer upon request.

501.1 Current List: Maintain a current list of solvents and any other VOC containing materials; state the VOC content of each in pounds per gallons or grams per liter.

501.2 Usage Records and Amount of Clothes Cleaned: Maintain monthly records of the weight of clothing cleaned, the amount of solvent used, and the weight and type of any material disposed of which contains any quantity of cleaning solvent. The name of the company receiving such material shall also be recorded.

502 COMPLIANCE DETERMINATION – TEST METHODS: When more than one test method is permitted for a determination, an exceedance of the limits established in the rule determined by any of the applicable test methods constitutes a violation of this rule.

502.1 Measurements of petroleum-based VOC emissions pursuant to provisions of this rule shall be conducted in accordance with EPA Test Method 25 or its applicable sub-method(s) (40 CFR 60, Appendix A). Alternatively, a person may meet the efficiency (85 percent) requirement of Section 302 if 6.6 lbs. (3 kg) or less of petroleum solvent is emitted per 220 lbs. (100 kg) dry weight of articles cleaned, subject to prior approval of the test protocol by the Control Officer.

502.2 Measurements of VOC content of solvents, waste, recovered or recycled material shall be conducted and reported in accordance with ASTM Standard Recommended Practices for General Gas Chromatography Procedures, E 260-85 or ASTM General Techniques for Infrared Quantitative Analysis, E 160A-67 or ASTM General Techniques of Ultraviolet Quantitative Analysis, ASTM E 169-63; as approved by the Control Officer.

502.3 Efficiency of the control device shall be determined according to EPA Method 18.

502.4 Ventilation/draft rate shall be determined by EPA Methods 2, 2A, 2C and 2D.

REGULATION III – CONTROL OF AIR CONTAMINANTS

RULE 334
RUBBER SPORTS BALL MANUFACTURING

INDEX

SECTION 100 – GENERAL

101 PURPOSE

102 APPLICABILITY

SECTION 200 – DEFINITIONS

201 ADHESIVE

202 APPROVED EMISSION CONTROL SYSTEM

203 DAY

204 PRODUCTION DAY

205 RUBBER SPORTS BALL

206 VAPOR PROCESSING DEVICE

SECTION 300 – STANDARDS

301 LIMITATION-ADHESIVES

302 OPERATION AND MAINTENANCE (O&M) PLAN

303 MAINTENANCE

304 STORAGE AND DISPOSAL OF VOC

305 EXEMPTIONS

SECTION 400 – ADMINISTRATIVE REQUIREMENTS

401 COMPLIANCE SCHEDULE

SECTION 500 – MONITORING AND RECORDS

501 PROVIDING AND MAINTAINING MONITORING DEVICES

502 RECORDKEEPING AND REPORTING

503 COMPLIANCE DETERMINATION-TEST METHODS

Adopted 08/02/93
Revised 09/20/94
Revised 06/19/96
Revised 09/25/13

MARICOPA COUNTY
AIR POLLUTION CONTROL REGULATIONS

REGULATION III – CONTROL OF AIR CONTAMINANTS

RULE 334
RUBBER SPORTS BALL MANUFACTURING

SECTION 100 – GENERAL

101 **PURPOSE:** To limit emission of volatile organic compounds (VOCs) from natural and synthetic rubber adhesives used in the manufacture of non-inflatable rubber balls.

102 **APPLICABILITY:** This rule applies to any rubber sports-ball manufacturing facility with an aggregate emission to atmosphere after December 31, 1989, of 50.0 tons (45.35 Mg) or more of VOC in any year or 8333 pounds (3780 kg) or more of VOC in any month, emitted from handling, using and/or preparing rubber adhesives or their constituents.

SECTION 200 – DEFINITIONS: For the purpose of this rule, the following definitions shall apply, in addition to those definitions found in Rule 100 (General Provisions and Definitions) of these rules. In the event of any inconsistency between any of the Maricopa County air pollution control rules, the definitions in this rule take precedence.

201 **ADHESIVE:** An initially fluid material used to fasten or bond two surfaces together by using the intermolecular forces between adhesive and the bonded surface(s) as a principal mechanism effecting the bonding.

202 **APPROVED EMISSION CONTROL SYSTEM:** A system for reducing emissions of organic compounds, consisting of collection and control devices which are approved in writing by the Control Officer and are designed and operated in accordance with good engineering practice.

203 **DAY:** A period of 24 consecutive hours beginning at midnight.

204 **PRODUCTION DAY:** Any day in which the total adhesive pumped into any and all adhesive application machines exceeds 100 gallons (379 liters).

205 **RUBBER SPORTS BALL:** A hollow ball having natural and/or synthetic rubber as a principal ingredient, having no pressure adjustment valve, and intended for sports in which it is hit.

206 VAPOR PROCESSING DEVICE: The portion of a VOC emission control system that recovers, destroys, or otherwise physically or chemically handles VOC vapor, delivered to it by a capture system, so that most or all of that VOC cannot be emitted to the atmosphere.

SECTION 300 – STANDARDS

301 LIMITATION – ADHESIVES: By May 31, 1995, no person shall use adhesives in the manufacture of rubber sports balls, including but not limited to tennis and racquet balls, except by:

301.1 Using adhesive with a VOC content that does not exceed 2.4 pounds of VOC per gallon (288 g/l) as applied, less water and non-precursor compounds, as determined by EPA Method 24; or

301.2 Using an Approved Emission Control System having an overall control efficiency, including capture and processing, of at least 81 percent by weight of VOC-reduction for all adhesive application processes using adhesive containing over 2.4 pounds of VOC per gallon (288 g/l), as applied, less water and non-precursor compounds. The control efficiency of an adsorption and recovery system used as an Approved Emission Control System shall be determined using the mass-balance formula in subsection 503.1.

302 OPERATION AND MAINTENANCE (O&M) PLAN:

302.1 The owner or operator of an Approved Emission Control System used to meet the requirements of subsection 301.2 of this rule shall provide the Control Officer with an Operation and Maintenance (O&M) Plan. This O&M Plan shall specify:

a. Key system operating parameters, such as temperatures, pressures, fluid throughputs, and/or flow rates; the stack VOC-concentration monitoring and adsorber sequencing equipment specifications and the set points contained in their programming; and any other critical processes necessary for proper operation and for determining compliance with this rule;

b. All essential maintenance procedures and their frequencies needed to maintain the Approved Emission Control System.

302.2 An Approved Emission Control System must have the O&M Plan approved in writing by the Control Officer.

302.3 Time Frames for Changes:

a. Changes involving reduction in the frequency or extent of a Control-Officer approved O&M Procedure must have the written consent of the Control Officer prior to being implemented.

b. Other changes: An updated O&M Plan must be submitted to the Control Officer for review within 10 days of any changes not involving reduction in frequency or extent of an approved O&M procedure. Within five working days of a written disapproval of such changes, either the original O&M Plan shall be reinstituted or an alternative, negotiated with the affected facility and approved in writing by the Control Officer, shall be instituted.

303 MAINTENANCE: Any person subject to this rule shall operate and maintain in proper working order when in use all process equipment in which VOC-containing materials are used.

304 STORAGE AND DISPOSAL OF VOC: Any person subject to this rule shall store all VOC-containing materials subject to evaporation, including waste adhesive and waste solvent in containers, each of which is legibly labeled with its contents. The presence of content-labels that are required by federal hazardous waste or occupational safety statutes (RCRA or OSHA) will meet this requirement. These containers shall be covered when not in use or, alternatively, they shall be placed beneath a hood ducted to or within an enclosure ducted to an operating Approved Emission Control System until solidified throughout. Such person shall keep records of disposal of VOC-containing materials in accordance with applicable federal, state, and local hazardous waste disposal statutes and rules.

305 EXEMPTIONS:

305.1 Facilities which after December 31, 1989, always emit less than 50 tons (45.4 Mg) per year and less than 8333 pounds (3780 kg) per month of VOC from adhesives used in the manufacture of rubber sports balls are exempt from this rule, except that those facilities which have the potential to annually emit or which do annually emit more than 25 tons (22.7 Mg) of VOC from such adhesives after December 31, 1989, must keep records in accordance with Section 500.

305.2 Applicability of other Rules:

a. Facilities exempted from the provisions of this rule pursuant to Section 102are not exempted from other provisions in other rules of the Maricopa County Air Pollution Control Regulation III.

b. Rules 330 and 336 shall not apply to a facility subject to the standards of this rule.

SECTION 400 – ADMINISTRATIVE REQUIREMENTS

401 COMPLIANCE SCHEDULE: An owner or operator who chooses to meet the requirements of Section 301 by use of an Approved Emission Control System must be in full compliance with all applicable requirements by May 31, 1995. Any owner or operator of an emission control system used to meet the requirements of subsection 301.2 of this rule shall provide the Control Officer with:

401.1 An Operation and Maintenance (O&M) Plan for this system by May 31, 1995.

401.2 A compliance plan by December 1, 1994, listing the dates of completion of increments of progress toward meeting the requirements of subsection 301.2.

SECTION 500 – MONITORING AND RECORDS

501 PROVIDING AND MAINTAINING MONITORING DEVICES: Any person operating an Approved Emission Control System pursuant to this rule shall provide, properly install and maintain in calibration, in good working order and in operation, devices described in an approved O&M Plan for indicating temperatures, pressures, fluid throughputs, rates of flow, and/or other operating conditions necessary to determine if air pollution control equipment is functioning properly and is properly maintained.

502 RECORDKEEPING AND REPORTING: Any person subject to this rule shall comply with the following requirements. Records shall be retained for five years and shall be made available to the Control Officer upon request.

502.1 Current List: Maintain a current list of adhesives including their formulations as applied, makeup solvents, and any other VOC-containing materials. State the VOC content of each in pounds per gallon or grams per liter.

502.2 Usage Records: Maintain records according to the following schedule, which show the type and amount of each adhesive, makeup solvent, and any other VOC-containing material.

a. Adhesives Solvents, and VOC-Containing Materials:

(1) Records shall be updated monthly showing the usage of the separate adhesives, solvents, and other VOC-containing materials.

(2) Yearly update those materials known to be annually used in quantities less than 15 gallons (56 l) or to annually emit less than 75 lb (34 kg).

(3) Deliveries: At the time of each delivery of solvent, the amount received, tank designation and time shall be recorded in a log book.

b. Measuring Instruments and Readings:

(1) Readings for efficiency determination should be made during the same time period each day.

(2) If volume rather than mass (weight) measures are used as the basis for calculations, then compensate for temperature. A temperature compensating instrument may be used for this purpose. If two or more such instruments are used in a demonstration of compliance

with this rule, log any difference(s) between their respective compensating factors with the temperature range(s) where difference occurs. Show adjustments for such differences when making mass-balance calculations.

(3) Readings of all meters or other instruments measuring throughput on lines to or from such tanks shall be recorded daily with date and time.

(4) Each repair, adjustment, or resetting of flow meters or other instruments measuring cumulative throughput shall be logged with the date, time, purpose, and the reading before and after such an operation. The cumulative, totalizing, throughput readout of such an instrument shall have no resetting feature.

503 COMPLIANCE DETERMINATION - TEST METHODS: When more than one test method is permitted for a determination, an exceedance of the limits established in this rule determined by any of the applicable test methods constitutes a violation of this rule.

503.1 Mass Balance Determinations - Self Monitoring of Compliance for a Facility Using Carbon Adsorption with Solvent Recovery as a Control Method:

a. Daily recording: Refer to Figure I of this rule for the location of the mass balance meters - MB, MV, and MR. By midday on the first workday following a completed production-day, the following shall be determined for that completed production day and entered in a hardcopy form acceptable to the Control Officer:

(1) The individual readings given by each of the three mass balance meters at the designated meter-reading time during the production day just completed;

(2) VOC throughputs via those three mass balance flow meters since both:

(a) the previous production day at the designated meter-reading time; and

(b) since meter-reading time on that production day which is nine production days prior to the most recently completed production day.

(3) Using the Recovery Formula in 503.1,b. and the logged values required by 503.1,a.(2)(a) above, determine the most recent one day recovery efficiency and record that in the same log. Using the values required by 503.1,a.(2)(b) in the previous paragraph, the 9-day rolling average shall also be calculated and recorded using the same recovery formula in 503.1,b.

b. Recovery formula: Using the liquid/liquid mass balance method, the following ratio expresses the efficiency of the control system during the period of the 9-day rolling average and for other periods:

Where: M_B is the solvent throughput indicated by the meter immediately downstream of the buffer tank.

M_V is the solvent throughput indicated by the meter on the output pipe of the virgin solvent tank.

M_R is the solvent throughput indicated by the meter downstream of the junction connecting the output lines from each recovered-solvent storage tank.

(1) Adjustments for waste disposed of through statutorily prescribed procedures: When the combined mass of all such waste is less than 0.5 percent of the total mass of solvent metered through meters MV and MR during the same 9-day rolling average period as the waste occurred, 95 percent of the mass of contaminated solvent and half the mass of any still fluid adhesive wasted may be subtracted from the denominator (MV + MR) in the recovery formula when determining efficiency. Except as allowed by the procedure set forth in the next paragraph, no adjustment credit will be given for waste adhesive which is no longer fluid. A Method 24 Test determination of VOC content(s) referenced in subsection 503.2 shall be performed if the owner or operator of an affected facility requests adjustment for a larger quantity of fluid and/or non-fluid waste(s). The request for adjustment and the results of the test shall be submitted to the Control Officer for approval.

(2) Total shut-downs and start-ups: The production statistics for the last production day prior to a complete production shutdown of at least five consecutive days shall not be included in the 9-day rolling average of control efficiency, as long as no adhesive is made on the last production day. At a start-up after a total shutdown "day one" of a 9-day rolling average period begins at the standard meter reading time on the third production day since start-up.

(3) Non-production days: On days during which a total of 100 gallons or less of adhesive enters adhesive application machines, the readings of meters "M_S", "M_V", and "M_R" shall not be entered in the same log-sector as such readings made during actual production days, irrespective of whether adhesive was made on such days.

503.2 The method of determining both the solids and the volatile content of adhesives, and of determining compliance of an adhesive with the VOC-limit specified in subsection 301.1 shall be the EPA Reference Method 24 (40 CFR, Part 60, Appendix A). Method 24 shall also be used to determine the

volatile and non-volatile content of waste adhesive with reference to subsection 503.1,b.(1).

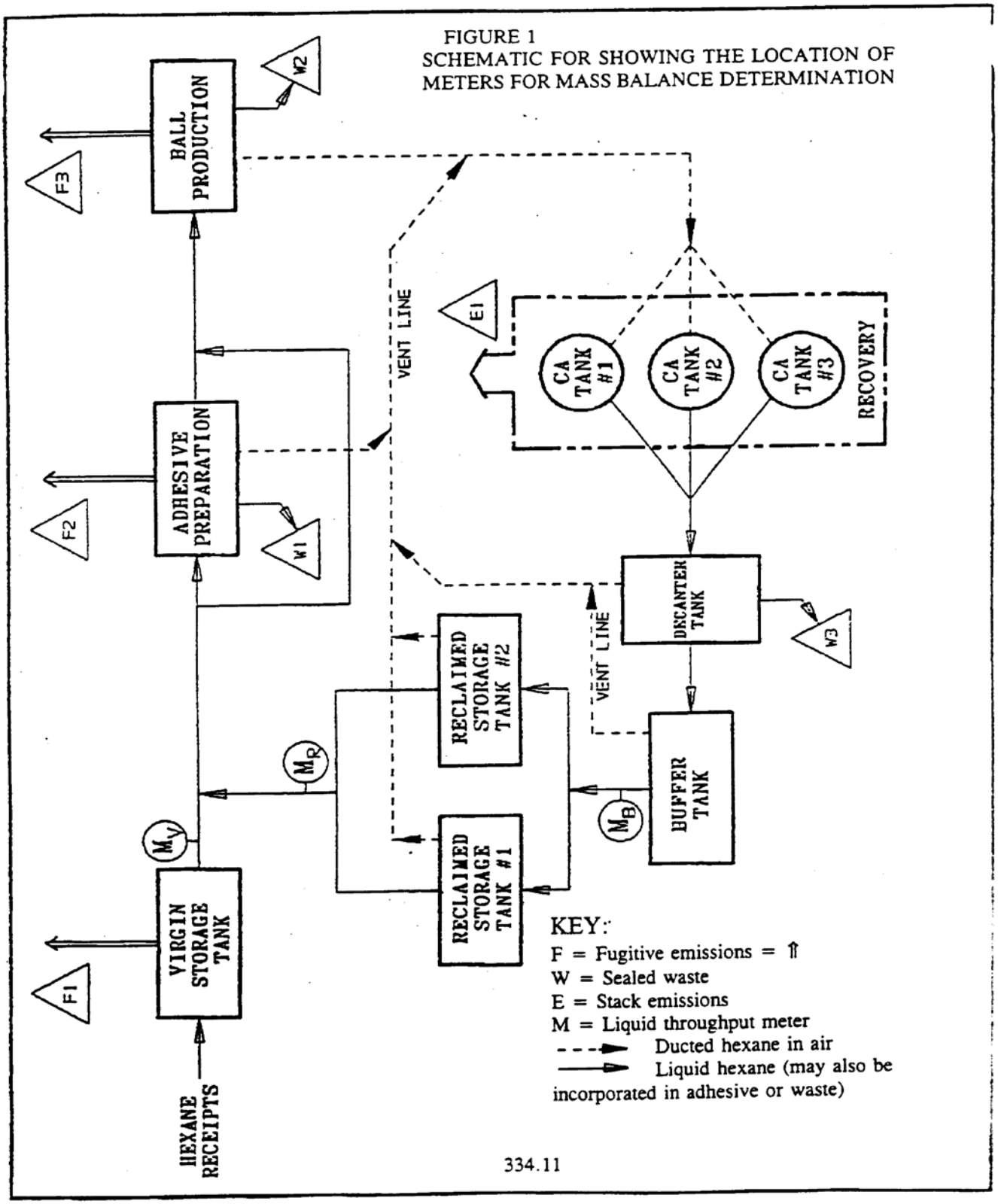

FIGURE 1
SCHEMATIC FOR SHOWING THE LOCATION OF METERS FOR MASS BALANCE DETERMINATION

REGULATION III – CONTROL OF AIR CONTAMINANTS

RULE 335
ARCHITECTURAL COATINGS

INDEX

SECTION 100 – GENERAL

101 PURPOSE

102 APPLICABILITY OF MULTIPLE STANDARDS

SECTION 200 – DEFINITIONS

201 ACRYLIC POLYMERS

202 ALKYDS

203 ARCHITECTURAL COATING

204 GROUND WOOD PRESERVATIVES

205 BITUMINOUS COATING MATERIALS

206 BOND BREAKERS

207 CATALYZED EPOXY

208 CONCRETE CURING COMPOUNDS

209 CHLORINATED RUBBER

210 DRY FOG COATINGS

211 ENAMEL UNDERCOATERS

212 FIRE RETARDANT COATINGS

213 FLAT COATINGS

214 GENERAL PRIMERS

215 GENERAL SEALERS

216 GENERAL UNDERCOATERS

217 GRAPHIC ARTS COATINGS (SIGN PAINTS)

218 INDUSTRIAL MAINTENANCE PRIMERS

219 INDUSTRIAL MAINTENANCE TOPCOATS

220 INORGANIC POLYMERS

221 LACQUERS

222 MASTIC TEXTURE COATINGS

223 METALLIC PIGMENTED PAINTS

224 MULTI-COLORED COATINGS

225 NON-FLAT COATINGS
226 OPAQUE STAINS
227 OPAQUE WOOD PRESERVATIVES
228 ORGANIC COMPOUND
229 QUICK-DRY ENAMELS
230 QUICK-DRY PRIMERS AND SEALERS
231 ROOF COATINGS
232 SEMI-TRANSPARENT STAINS
233 SEMI-TRANSPARENT WOOD PRESERVATIVES
234 SHELLACS
235 SILICONES
236 SPECIALTY FLAT PRODUCTS
237 SPECIALTY PRIMERS, SEALERS, AND UNDERCOATERS
238 SWIMMING POOL COATINGS
239 TILE-LIKE GLAZE COATINGS
240 TRAFFIC COATINGS
241 UNIQUE VEHICLES
242 URETHANE POLYMERS
243 VARNISHES
244 VINYL CHLORIDE POLYMERS
245 WATERPROOF MASTIC COATINGS
246 WATERPROOF SEALERS

SECTION 300 – STANDARDS

301 PROHIBITION-BITUMINOUS PAVEMENT SEALERS
302 INTERIM LIMITS - NON-FLAT ARCHITECTURAL COATINGS
303 FINAL LIMITS - NON-FLAT ARCHITECTURAL COATINGS
304 LIMITS - FLAT ARCHITECTURAL COATINGS
305 LIMITS - SPECIALTY COATINGS
306 EXEMPTIONS - SPECIFIC-USE COATINGS
307 EXEMPTIONS - SMALL CONTAINERS

SECTION 400 – ADMINISTRATIVE REQUIREMENTS

401 LABELING REQUIRED

402 MANUFACTURE DATE REQUIRED

SECTION 500 – MONITORING AND RECORDS

501 DETERMINATION OF COMPLIANCE

Adopted 07/13/88
Revised 09/25/13

MARICOPA COUNTY
AIR POLLUTION CONTROL REGULATIONS

REGULATION III – CONTROL OF AIR CONTAMINANTS

RULE 335
ARCHITECTURAL COATINGS

SECTION 100 – GENERAL

101 **PURPOSE:** To limit the emission of volatile organic compounds from architectural coatings.

102 **APPLICABILITY OF MULTIPLE STANDARDS:** In any instance where more than one of the standards set forth in this rule may be applicable, the most restrictive standard shall apply.

SECTION 200 – DEFINITIONS: For the purpose of this rule, the following definitions shall apply, in addition to those definitions found in Rule 100 (General Provisions and Definitions) of these rules. In the event of any inconsistency between any of the Maricopa County air pollution control rules, the definitions in this rule take precedence.

201 **ACRYLIC POLYMERS:** Polymers resulting from the polymerization of derivatives of acrylic acids, including esters of acrylic acids, methacrylic acid, acrylonitrile, and their copolymers. Also known as acrylic resins and acrylate resins.

202 **ALKYDS:** Synthetic resins formed by the condensation of polyhydric alcohols with polybasic acids.

203 **ARCHITECTURAL COATING:** Any coating applied to stationary structures and their appurtenances, to mobile homes, to pavements or to curbs.

204 **BELOW GROUND WOOD PRESERVATIVES:** Heavy duty coatings formulated solely for the purpose of protecting below ground wood from decay or insect attack and which contain a wood preservative.

205 **BITUMINOUS COATING MATERIALS:** Black or brownish materials, soluble in carbon disulfide, consisting mainly of hydrocarbons and which are obtained from natural deposits, or as residues from the distillation of crude petroleum oils or of low grades of coal.

206 **BOND BREAKERS:** Coatings whose sole purpose, when applied between layers of concrete, is to prevent the freshly poured top layer of concrete from bonding to the substrate on which it is poured.

207 **CATALYZED EPOXY:** Crosslinking resins made by the reaction of epoxides with other material such as amines, alcohols, phenols, carboxylic acids and unsaturated compounds.

208 **CONCRETE CURING COMPOUNDS:** Coatings whose sole purpose is to retard the evaporation of water from the surface of freshly cast concrete, thereby strengthening it.

209 **CHLORINATED RUBBER:** Resin formed by the reaction of rubber with chlorine.

210 **DRY FOG COATINGS:** Coatings which are formulated so that when sprayed, overspray droplets dry before falling on floors and other surfaces.

211 **ENAMEL UNDERCOATERS:** Coatings which are designed to be applied to a new surface over a primer or over a previous coat of paint, in order to improve the seal, provide better adhesion and make a smooth base for non-flat coatings.

212 **FIRE RETARDANT COATINGS:** Coatings which are designed to retard fires and which will significantly:

212.1 Reduce the rate of flame spread on the surface of a material to which such a coating has been applied; or

212.2 Resist ignition when exposed to high temperature; or

212.3 Insulate a substrate to which such a coating has been applied and prolong the time required for the substrate to reach ignition temperature.

213 **FLAT COATINGS:** Coatings which register gloss less than 15 on an 85° meter or less than 5 on a 60° meter, or which is labeled as a flat coating.

214 **GENERAL PRIMERS:** Coatings which are intended to be applied to a surface to provide a firm bond between the substrate and subsequent coats.

215 **GENERAL SEALERS:** Coatings which are intended for use on porous substrates to protect the substrate, to prevent subsequent coatings from being absorbed by the substrate, or to prevent harm to subsequent coatings by materials in the substrate.

216 **GENERAL UNDERCOATERS:** Coating which are designed to provide a smooth surface for subsequent coats.

217 **GRAPHIC ARTS COATINGS (SIGN PAINTS):** Coatings which are marketed solely for application to indoor and outdoor signs and include lettering enamels, poster colors and bulletin colors.

218 **INDUSTRIAL MAINTENANCE PRIMERS:** Coatings which are intended to be applied to a surface prior to the application of an industrial maintenance topcoat, to provide a firm bond between the substrate and subsequent coats.

219 **INDUSTRIAL MAINTENANCE TOPCOATS:** High performance coatings which are formulated for the purpose of heavy abrasion, water immersion, chemical, corrosion, temperature, electrical or solvent resistance.

220 **INORGANIC POLYMERS:** Substances whose principle structural features are made of homopolar inter-linkages between multivalent elements other than carbon. This does not preclude the presence of carbon-containing groups in the side branches, or as inter-linkages between principle structural members. Examples of such polymers are ethyl and butyl silicates.

221 **LACQUERS:** Clear or pigmented coatings formulated with nitrocellulose or synthetic resins to dry by evaporation without chemical reaction and to provide a quick drying, solid protective film.

222 **MASTIC TEXTURE COATINGS:** Coatings, except weatherproof mastic coatings, which are formulated to cover holes, minor cracks and to conceal surface irregularities.

223 **METALLIC PIGMENTED PAINTS:** Any coatings which are formulated with metallic pigment and which contain more than 10 grams of metal particles per liter of coating (0.08 lb/gal) as applied where such metal particles are visible in the dried film.

224 **MULTI-COLORED COATINGS:** Coatings which exhibit more than one color when applied and which are packaged in a single container and applied in a single coat.

225 **NON-FLAT COATINGS:** Coatings which register gloss of 15 or greater on an 85° meter or 5 or greater on a 60° meter, or which are identified on the label as gloss, semi-gloss, or eggshell enamel coatings.

226 **OPAQUE STAINS:** All stains that are not classified as semitransparent stains.

227 **OPAQUE WOOD PRESERVATIVES:** All wood preservatives that are not classified as semitransparent wood preservatives.

228 **ORGANIC COMPOUND:** Any compound of carbon excluding carbon monoxide, carbon dioxide, carbonic acid, metallic carbides and carbonates and ammonium carbonate.

229 **QUICK-DRY ENAMELS:** Non-flat coatings which comply with the following:

229.1 Should be capable of being applied directly from the container by brush or roller when the ambient temperature is between 60°F and 80°F.

229.2 When tested in accordance with ASTM D1640 they shall: set to touch in two hours or less, dry hard in eight hours or less, and be tack-free in four hours or less by the mechanical method test.

229.3 Shall have a 60° meter dried film gloss of no less than 70.

230 **QUICK-DRY PRIMERS AND SEALERS:** Primers, sealers and undercoaters which are intended to be applied to a surface to provide a firm bond between the substrate and subsequent coats and which are dry to the touch in one-half hour and can be recoated in two hours (ASTM 1640).

231 **ROOF COATINGS:** Coatings which are formulated for the sole purpose of preventing penetration of the substrate by water. These coatings include bituminous roof and waterproof mastic coatings.

232 **SEMI-TRANSPARENT STAINS:** Coatings which are formulated to change the color of a surface but not conceal the surface.

233 **SEMI-TRANSPARENT WOOD PRESERVATIVES:** Wood preservative stains which are formulated for the purpose of protecting exposed wood from decay or insect attack by the addition of a wood preservative chemical and which change the color of a surface but do not conceal the surface. These coatings perform their function by penetrating into the wood.

234 **SHELLACS:** Clear or pigmented coatings formulated with natural resins (except nitrocellulose resins), thinned with alcohol, formulated to dry by evaporation without a chemical reaction and intended to provide stain blocking properties as well as a solid protective film.

235 **SILICONES:** A resin containing silicon unlike organic resins, which all contain carbon. The basic structure of silicones consist of silicon-oxygen linkages.

236 **SPECIALTY FLAT PRODUCTS:** Self-priming flat products used only to perform one of the following functions: repair fire, smoke or water damage; neutralize odors; block stains; or coat acoustical materials without affecting their acoustical abilities.

237 **SPECIALTY PRIMERS, SEALERS, AND UNDERCOATERS:** Primers, sealers and undercoaters used only to perform one of the following functions: repair fire, smoke or water damage; neutralize odors; block stains; block efflorescence; condition chalky surfaces; or coat acoustical materials without affecting their acoustical abilities.

238 **SWIMMING POOL COATINGS:** Coatings specifically formulated to coat the interior of swimming pools and resist swimming pool chemicals.

239 **TILE-LIKE GLAZE COATINGS:** Coatings which are formulated to provide a tough, extra-durable coating system, which are applied as a continuous (seamless) highbuild film and which cure to a hard glaze finish.

240 **TRAFFIC COATINGS:** Coatings which are formulated to be applied to public streets, highways, and other surfaces including, but not limited to curbs, berms, driveways, and parking lots.

241 **UNIQUE VEHICLES:** Generic polymer components not defined by any of the coatings listed in the category of industrial primers and topcoats in Section 305 of this rule, e.g., hypalon, phenoxy.

242 **URETHANE POLYMERS:** Coating vehicles containing a polyisocyanatemonomer reacted in such a manner as to yield polymers containing any ratio, proportion, or combination of urethane linkages, active isocyanate groups, or polyisocyanate monomer.

243 **VARNISHES:** Clear or pigmented coatings formulated with various resins to dry by chemical reaction or exposure to air. These coatings are intended to provide a durable, transparent or translucent, solid protective film.

244 **VINYL CHLORIDE POLYMERS:** Polymers made by the polymerization of vinyl chloride or copolymerization of vinyl chloride with other unsaturated compounds, the vinyl chloride being in greatest amount by weight.

245 **WATERPROOF MASTIC COATINGS:** Weatherproof and waterproof coatings which are formulated to cover holes and minor cracks and to conceal surface irregularities.

246 **WATERPROOF SEALERS:** Coatings which are formulated for the sole purpose of protecting porous substrates by preventing the penetration of water.

SECTION 300 – STANDARDS

301 **PROHIBITION–BITUMINOUS PAVEMENT SEALERS:** No person shall apply, sell, offer for sale or manufacture for sale within Maricopa County any architectural coating manufactured after July 13, 1988, which is recommended for use as a bituminous pavement sealer unless it is an emulsion type coating.

302 **INTERIM LIMITS–NON-FLAT ARCHITECTURAL COATINGS:** No person shall apply, sell, offer for sale or manufacture for sale within Maricopa County any non-flat architectural coating manufactured after July 13, 1989, which contains more than 3.2 lbs (380 g/l) of volatile organic compounds per gallon of coating, excluding water and any colorant added to tint bases. These limits do not apply to specialty coatings listed in Section 305 of this rule.

303 **FINAL LIMITS–NON-FLAT ARCHITECTURAL COATINGS:** No person shall apply, sell, offer for sale or manufacture for sale within Maricopa County any non-flat architectural coating manufactured after July 13, 1990, which contains more than 2.1 lbs (250 g/l) of volatile organic compounds per gallon of coating, excluding water and any colorant added to tint bases. These limits do not apply to specialty coatings listed in Section 305 of this rule.

304 **LIMITS–FLAT ARCHITECTURAL COATINGS:** No person shall apply, sell, offer for sale or manufacture for sale within Maricopa County any flat architectural coating manufactured after July 13, 1989, which contains more than 2.1 lbs (250 g/l) of volatile organic compounds per gallon of coating, excluding water and any

colorant added to tint bases. These limits do not apply to specialty coatings listed in Section 305 of this rule.

305 **LIMITS: SPECIALTY COATINGS:** No person shall apply, sell, offer for sale or manufacture for sale within Maricopa County any architectural coating that exceeds the following limits manufactured after the date listed below. Limits are expressed in pounds of VOC per gallon of coating as applied, excluding water and any colorant added to tint bases.

	Effective Dates		
	7/13/89	7/13/90	7/13/91
COATING			(lb/gal)
Concrete Curing Compounds	-	-	2.9
Dry Fog Coating			
Flat	4.6	-	3.5
Non-flat	3.5	-	3.3
Enamel Undercoaters	3.8	-	2.9
General Primers, Sealers and Undercoaters	3.3	-	2.9
Industrial Maintenance Primers and Topcoats			
Alkyds	4.2	3.5	3.5
Catalyzed Epoxy	-	4.2	3.5
Bituminous Coating Materials	-	-	3.5
Inorganic Polymers	-	-	3.5
Vinyl Chloride Polymers	-	-	3.5
Chlorinated Rubbers	-	-	3.5
Acrylic Polymers	-	3.5	3.5
Urethane Polymers	-	3.5	3.5
Silicones	-	-	3.5
Unique Vehicles	-	-	3.5
Lacquers	-	-	5.7
Opaque Stains	3.3	-	2.9
Wood Preservatives	-	-	2.9
Quick Dry Enamels	-	-	3.3
Roof Coatings	-	-	2.5
Semi-transparent Stains	-	-	2.9
Semi-transparent and Clear Wood Preservatives	-	-	2.9
Opaque Wood Preservatives	3.3	-	2.9
Specialty Flat Products	-	-	3.3
Specialty Primers, Sealers & Undercoaters	-	-	2.9
Stains, All	-	-	*2.9*
Traffic Coatings			
Applied to Public Streets and Highways	3.5	-	2.1
Applied to other Surfaces	2.1	-	2.1
Black Traffic Coatings	-	-	2.1
Varnishes	-	4.2	2.9
Waterproof Mastic Coating	-	-	2.5
Waterproof Sealers	-	-	3.3
Wood Preservatives Except Below Ground	–	–	2.9

306 **EXEMPTIONS–SPECIFIC USE COATINGS:** This rule shall not apply to architectural coatings recommended by the manufacturer for use solely as one or more of the following:

306.1 Below ground wood preservative coatings.

306.2 Bond breakers.

306.3 Fire retardant coatings.

306.4 Graphic arts coatings (sign paints).

306.5 Mastic texture coatings.

306.6 Metallic pigmented coatings.

306.7 Multi-colored paints.

306.8 Quick-dry primers, sealers and undercoaters.

306.9 Shellacs.

306.10 Swimming pool paints.

306.11 Tile-like glaze coatings.

307 **EXCEPTION–SMALL CONTAINERS:** The provisions of this rule shall not apply to architectural coatings supplied in containers having capacities of one quart or less.

SECTION 400 – ADMINISTRATIVE REQUIREMENTS

401 **LABELING REQUIRED:** Effective July 13, 1989, containers for all coatings subject to this rule shall carry a statement of the manufacturer's recommendation regarding thinning of the coatings. Data may be quantified with either English or metric units. This requirement shall not apply to the thinning of the architectural coatings with water. The recommendation shall specify that the coating is to be employed without thinning or diluting under normal environmental and application conditions, unless the recommended thinning for normal environmental and application conditions does not cause the coating to exceed its applicable standard. Architectural coatings subject to the Federal Insecticide, Fungicide and Rodenticide Act shall not be subject to the labeling requirements of this rule.

402 **MANUFACTURE DATE REQUIRED:** Containers for all coatings subject to the provisions of this rule shall display the date of manufacture of the contents or a code indicating the date of manufacture. The manufacturers of such coatings shall file with the Control Officer an explanation of each code.

SECTION 500 – MONITORING AND RECORDS

501 DETERMINATION OF COMPLIANCE: Testing procedures to determine compliance with prescribed VOC limits shall be consistent with Reference Methods 24 and 24A in the Arizona Testing Manual for Air Pollutant Emissions.

REGULATION III – CONTROL OF AIR CONTAMINANTS

RULE 336
SURFACE COATING OPERATIONS

INDEX

SECTION 100 – GENERAL

101 PURPOSE

102 APPLICABILITY

SECTION 200 – DEFINITIONS

201 ADHESIVE

202 AEROSOL CAN

203 AIR DRIED COATING

204 BAKED COATING

205 CAN COATING

206 CAN PRINTING INK

207 CLEAR COAT

208 COIL COATING

209 DAY

210 ELECTROSTATIC SPRAY/SYSTEM

211 EMISSION CONTROL SYSTEM (ECS)

212 END SEALING COMPOUND

213 EXEMPT EVAPORATING COMPONENTS (EXEMPT COMPOUNDS)

214 EXTERIOR BASECOAT

215 EXTREME PERFORMANCE COATING

216 FABRIC

217 FABRIC COATING

218 FILM COATING

219 FLEXIBLE PLASTIC PART OR PRODUCT

220 HEAT SENSITIVE MATERIAL

221 HIGHWAY VEHICLE

222 INTERIOR BASECOAT

223 INTERIOR BODY SPRAY

224 LARGE APPLIANCE

225 LOW PRESSURE SPRAY GUN

226 METAL FURNITURE

227 MINUS EXEMPT COMPOUNDS OR MINUS EXEMPT EVAPORATING COMPONENTS

228 MOBILE EQUIPMENT

229 ORGANIC COMPOUND

230 OTHER METAL PARTS AND PRODUCTS

231 OVERVARNISH

232 PAPER COATING

233 PLASTIC

234 POLYESTER AND POLYESTER RESIN

235 POLYESTER COMPOSITE

236 PRIMER

237 QUALITY CLASS Q

238 REFINISHING

239 REPAIR COATING

240 RESTRICTED SPRAY GUN

241 SILICONE RELEASE COATING

242 SMALL SURFACE-COATING SOURCE (SSCS)

243 STRIPPABLE BOOTH COATING

244 SURFACE COATING

245 SURFACE COATING OPERATION

246 THREE-PIECE CAN SIDE-SEAM COAT

247 TOPCOAT

248 TOTAL VOC VAPOR PRESSURE (VOC COMPOSITE PARTIAL PRESSURE)

249 TOUCH UP COATING

250 TWO-PIECE CAN EXTERIOR END COAT

251 VINYL COATING (COATING ON VINYL)

252 VOC-BORNE COATING

253 VOC-BORNE DILUENT

254 VOC CONTENT

SECTION 300 – STANDARDS

301 SURFACE COATINGS

302 APPLICATION METHODS FOR SURFACE COATINGS

303 CLEANUP OF APPLICATION EQUIPMENT

304 HANDLING AND DISPOSAL OF VOC

305 EXEMPTIONS

306 REQUIREMENTS FOR AIR POLLUTION CONTROL EQUIPMENT AND ECS MONITORING EQUIPMENT

SECTION 400 – ADMINISTRATIVE REQUIREMENTS

401 COMPLIANCE SCHEDULE

SECTION 500 – MONITORING AND RECORDS

501 RECORDKEEPING AND REPORTING

502 ECS RECORDING REQUIREMENTS

503 COMPLIANCE DETERMINATION AND TEST METHODS

504 FORMULA FOR TOTAL VOC VAPOR PRESSURE

Revised 07/13/88
Revised 09/21/92
Revised 06/19/96
Revised 04/07/99
Revised 09/25/13

MARICOPA COUNTY
AIR POLLUTION CONTROL REGULATIONS

REGULATION III – CONTROL OF AIR CONTAMINANTS

RULE 336
SURFACE COATING OPERATIONS

SECTION 100 – GENERAL

101 **PURPOSE:** To limit the emission of volatile organic compounds (VOCs) from surface coating operations.

102 **APPLICABILITY:** This rule applies to coating operations listed in Table 1 of this rule that are not more specifically regulated by another rule within Rules 300 to 359 of Regulation III. Examples of coating operations not regulated by this rule appear in subsection 305.1.

102.1 Surface-coating activities regulated under this rule include, but are not limited to, the application of coating, coating preparation/mixing at the facility applying the coating, and the cleanup of coating application equipment.

102.2 Subsections 305.2 through 305.7 set forth partial or conditional exemptions for certain materials or uses employed by a surface coating operation subject to this rule.

102.3 This rule is not applicable to coatings having a VOC content, minus exempt compounds, of less than 0.15 lb VOC/gal (18g/L) nor to solvents having a VOC content of material less than 0.15 lb VOC/gal.

102.4 **NSPS & NESHAP:** In addition to this rule, facilities may be subject to New Source Performance Standards (NSPS) in Rule 360 and/or to National Emission Standards for Hazardous Air Pollutants (NESHAP) in Rule 370 of these Rules and Regulations.

SECTION 200 – DEFINITIONS: For the purpose of this rule, the following definitions shall apply, in addition to those definitions found in Rule 100 (General Provisions and Definitions) of these rules. In the event of any inconsistency between any of the Maricopa County air pollution control rules, the definitions in this rule take precedence.

201 **ADHESIVE:** A material used for the primary purpose of bonding two or more surfaces together.

202 **AEROSOL CAN:** A non-refillable hand-held container from which a product is dispensed by means of pressurized propellant packaged within the container.

203 **AIR-DRIED COATING:** A coating which is dried by the use of air or forced warm air at temperatures up to and including 200°F (93.3°C).

204 **BAKED COATING:** A coating that is dried or cured in an oven in which the oven temperature exceeds 200°F (93.3°C).

205 **CAN COATING:** Any coating used in the production of metal cans.

206 **CAN PRINTING INK:** A fluid or viscous formulation used in can printing that imparts design, pattern, and/or alphanumeric symbols to a can.

207 **CLEAR COAT:** Any coating which lacks color or opacity or is transparent.

208 **COIL COATING:** Any coating applied to the surface(s) of flat metal sheets or strips that are formed into rolls or coils not used to make cans.

209 **DAY:** A period of 24 consecutive hours beginning at midnight.

210 **ELECTROSTATIC SPRAY/SYSTEM:** A method of applying atomized paint by electrically charging the coating and the object being coated with opposing charges. A higher proportion of the coating reaches and coats the object than would occur in the absence of a charge.

211 **EMISSION CONTROL SYSTEM (ECS):** A system, approved in writing by the Control Officer, designed and operated in accordance with good engineering practice to reduce emissions of volatile organic compounds. Such system consists of an emissions collection subsystem and an emissions processing subsystem.

212 **END SEALING COMPOUND:** A compound which is coated onto can ends and functions as a gasket when the end is attached to the can.

213 **EXEMPT EVAPORATING COMPONENTS (EXEMPT COMPOUNDS):** The non-VOC, evaporating portion of a coating formulation; this necessarily includes all non-precursor organic compounds, as well as water and other inorganic liquids and gases.

214 **EXTERIOR CAN - BASECOAT:** Any coating applied to the exterior of a can to provide protection for the metal or to provide background for any lithographic or printing operation.

215 **EXTREME PERFORMANCE COATING:** A coating used on a surface where the coated surface in its intended use is at temperatures consistently in excess of 250°F (121°C).

216 **FABRIC:** Textile material. Non-manufactured items from nature are not fabric except for natural threads, fibers, filaments, and similar that have been manufactured into textile fabric.

217 **FABRIC COATING:** Any decorative or protective coating or reinforcing material applied onto or impregnated into textile fabric.

218 **FILM COATING:** Any coating applied in a web coating process on film substrate other than paper or fabric, including, but not limited to, typewriter ribbons, photographic film, magnetic tape and metal foil gift wrap.

219 **FLEXIBLE PLASTIC PART OR PRODUCT:** A plastic part or product designed to withstand significant deformation without damaging it for its intended use. Not included are flexible plastic parts that are found on a can, coil, metal furniture, or large appliance, or that are already a part of an aerospace component, highway vehicle, mobile equipment, architectural building or structure, or a previously coated marine-vessel.

220 **HEAT SENSITIVE MATERIAL:** Materials which cannot consistently be exposed to temperatures greater than 203°F (95°C) without materially affecting desired function, performance, or other characteristics.

221 **HIGHWAY VEHICLE:** Any vehicle that is physically capable of being driven upon a highway including, but not limited to, cars, pickups, vans, trucks, truck-tractors, motorhomes, motorcycles, and utility vehicles.

222 **INTERIOR BASECOAT:** Any coating applied to the interior of a can to provide a protective lining between the intended contents and the metal shell of the can.

223 **INTERIOR BODY SPRAY:** Any coating sprayed onto the interior of a can to provide a protective film between the intended contents and the metal shell of the can.

224 **LARGE APPLIANCE:** A door, case, lid, panel, or interior support part of residential and commercial washers, dryers, ranges, refrigerators, freezers, water heaters, dishwashers, trash compactors, air conditioners, evaporative coolers and other similar products.

225 **LOW PRESSURE SPRAY GUN:** An air-atomized spray gun that, by design, functions best at tip pressures below 10 psig (516 mm Hg), measured according to subsection 503.1d of this rule, and for which the manufacturer makes no claims to the public that the gun can be used effectively above 12 psig (619 mm Hg).

226 **METAL FURNITURE:** Any furniture made of metal or any metal part which will be assembled with other parts made of metal or other material(s) to form a furniture piece.

227 **MINUS EXEMPT COMPOUNDS or MINUS EXEMPT EVAPORATING COMPONENTS:** See *VOC Content Minus Exempt Compounds.*

228 **MOBILE EQUIPMENT:** Any equipment that is physically capable of being driven or drawn upon a highway including, but not limited to, the following types of equipment: construction vehicles (such as mobile cranes, bulldozers, concrete mixers); farming equipment (wheel tractor, plow, pesticide sprayer); hauling equipment (truck trailers, utility bodies, camper shells); and miscellaneous equipment (street cleaners, mopeds, golf carts).

229 **ORGANIC COMPOUND:** Any compound of carbon excluding carbon monoxide, carbon dioxide, carbonic acid, carbonates, and metallic carbides.

230 **OTHER METAL PARTS AND PRODUCTS:** Any metal part or product, excluding the following items that are made of metal: can, coil, furniture, large appliance, aerospace component, metal foil, metal textile fabric, semiconductor metal, highway vehicle, mobile equipment, an architectural building or structure, a previously coated marine-vessel.

231 **OVERVARNISH:** Any coating applied to a can to reduce the coefficient of friction, to provide gloss, or to protect the finish against abrasion and/or corrosion.

232 **PAPER COATING:** Any coating applied on or impregnated into paper, including, but not limited to, adhesive tapes and labels, book covers, post cards, office copier paper, drafting paper and pressure sensitive tapes.

233 **PLASTIC:** Any solid, synthetic: resin, polymer, or elastomer, except rubber. For the purposes of this rule, plastic film is considered film; fabric and paper made of polymeric plastic fibers are considered fabric and paper, respectively.

234 **POLYESTER and POLYESTER RESIN:** A complex, polymeric ester containing difunctional acids.

235 **POLYESTER COMPOSITE:** Cured material made of polyester resin with reinforcing material imbedded in it, such as glass fibers.

236 **PRIMER:** A coating applied directly to substrate for any one or combination of the following purposes: corrosion prevention, protection from the environment, functional fluid resistance, or adhesion of subsequent coatings.

237 **QUALITY CLASS Q:** Any system, structure, coating or other component which, if defective or inoperable, could cause or increase the severity of a nuclear incident, thereby imposing undue risk to the health and safety of the public.

238 **REFINISHING:** Recoating a used object's surface which arrives at the refinisher with a coating or with a previous coating worn away by use.

239 **REPAIR COATING:** A coating or coating operation used to recoat the portion of a completed finish that suffered post-production damage at the facility where the finish was applied.

240 **RESTRICTED SPRAY GUN:** Any air-atomizing spray gun that is not a low pressure spray gun, and any other coating gun that is not on the list in subsection 303.1 of this rule.

241 **SILICONE RELEASE COATING:** Any resin coating, the major cured portion of which is silicone resin, having as its primary function the release of food products from metal surfaces such as baking pans.

242 **SMALL SURFACE-COATING SOURCE (SSCS):** A facility from which the total VOC emissions for all surface coating operations that are subject to this rule without, or prior to, any emission control, is less than 15 pounds (6.8 kg) per day and less than 2 tons (1814 kg) per year; as demonstrated by both adequate records of coating and diluent use (pursuant to subsection 501.2) and a separate tally of the number of days each month that such coating operations occur.

243 **STRIPPABLE BOOTH COATING:** A temporary coating that is applied to spray booth surfaces to receive the overspray and protect the surfaces, and which is designed to readily be pulled off the substrate in strips or sheets, and disposed of.

244 **SURFACE COATING:** Any liquid, fluid, or mastic composition which is converted to a solid (or semi-solid) protective, decorative, or adherent film or deposit after application as a thin layer. Surface coating is generally distinct and different from impregnation and from applying adhesive for bonding purposes.

245 **SURFACE COATING OPERATION:** Preparation, handling, mixing, and application of surface coating, and cleanup of application-equipment and enclosures at a facility where surface coating is applied.

246 **THREE-PIECE CAN SIDE-SEAM COAT:** Any coating sprayed onto the interior and/or exterior of a can body seam on a three-piece can to protect the exposed metal.

247 **TOPCOAT:** The final, permanent, coating-formulation that completed the finish on a surface.

248 **TOTAL VOC VAPOR PRESSURE (VOC COMPOSITE PARTIAL PRESSURE):** The sum of the partial pressures of the compounds defined as VOCs, calculated according to the formula in Section 504 of this rule.

249 **TOUCH UP COATING:** A coating used to cover minor coating imperfections after the main coating operation. This includes touch-up coating that accompanies the purchase of an object already coated with that coating.

250 **TWO-PIECE CAN EXTERIOR END COAT:** Any coating applied to the exterior end of a can to provide protection to the metal.

251 **VINYL COATING (COATING ON VINYL):** Any decorative or protective coating or reinforcing coating applied over vinyl-coated textile fabric or vinyl sheets.

252 **VOC-BORNE COATING:** A coating that contains more VOC than water, by weight.

253 **VOC-BORNE DILUENT:** A solvent or other diluent that contains more VOC than water, by weight.

254 **VOC CONTENT:** In this rule, VOC content is determined by one of the following two formulas: To determine compliance with Table 1 or the 2.0 lb VOC/gal threshold in Section 302, use the following formula in subsection 255.1; For other purposes, use the formula in subsection 255.2:

254.1 VOC CONTENT MINUS EXEMPT COMPOUNDS (is the same as **VOC CONTENT MINUS EXEMPT EVAPORATING COMPONENTS**) (also known as **"THE EPA METHOD 24 VOC CONTENT"** on manufacturer's data sheets.)

$$VOC\ Content\ Minus\ Exempt\ Compunds = \frac{W_s - W_w - W_{es}}{V_m - V_w - V_{es}}$$

Using consistently either English or metric measures in the calculations where:

W_s = weight of all volatile material in pounds (or grams), including VOC, water, non-precursor organic compounds and dissolved vapors

W_w = weight of water in pounds (or grams)

W_{es} = weight of all non-precursor compounds in pounds (or grams)

V_m = volume of total material in gallons (or liters)

V_w = volume of water in gallons (or liters)

V_{es} = volume of all non-precursor compounds in gallons (or liters)

254.2 VOC CONTENT OF MATERIAL (MATERIAL VOC-CONTENT)

$$VOC\ Content\ of\ Material = \frac{W_s - W_w - W_{es}}{V_m}$$

Using consistently either English or metric measures in the calculations,

where:

W_s = weight of all volatile material in pounds (or grams) including VOC, water, non-precursor organic compounds and dissolved vapors

W_w = weight of water in pounds (or grams)

W_{es} = weight of all non-precursor compounds in pounds (or grams)

V_m = volume of total material in gallons (or liters)

SECTION 300 – STANDARDS

301 **SURFACE COATINGS:** A person shall comply with one of the following for all applications of surface coatings:

301.1 Meet the limits in Table 1.

301.2 Operate an ECS in accordance with subsection 306.1 when applying a coating that exceeds the VOC limits in Table 1.

301.3 Qualify for an exemption under Section 305.

TABLE 1

SURFACE COATING EMISSION LIMITS		
TYPE OF SURFACE COATING	LIMITS AS APPLIED: VOC content minus exempt compounds (see subsection 255.1)	
Column I	**Column II**	
	lbs/gal	g/liter
Can Coating		
Sheet Basecoat (Exterior and Interior) and Overvarnish	2.8	340
Two-Piece Can Exterior (Basecoat and Overvarnish)	2.8	340
Two and Three-Piece Can Interior Body Spray	4.2	510
Two-Piece Can Exterior End (Spray or Roll Coat)	4.2	510
Three-Piece Can Side-Seam Spray	5.5	660
End Sealing Compound	3.7	440
Can Printing Ink	2.5	300
Coil Coating (any coat)	2.6	310
Metal Furniture Coating	3.0	360
Large Appliance Coating	2.8	340
OTHER METAL PARTS AND PRODUCTS COATING (As defined in Section 231) The following includes Non-adhesive Coating, Adhesive, Adhesive Primer, Caulking, and Beaded Sealants:		
Air-Dried Coating	3.5	420
Baked Coating [above 200°F (93°C)]	3.0	360
Silicone Release Coating: Baked or Air-Dried	3.5	420
Fabric Coating	2.9	350
Film Coating	2.9	350
COATING PLASTIC PARTS AND PRODUCTS THAT ARE NOT DEFINED AS FLEXIBLE	3.5	420
COATING FLEXIBLE PLASTIC PARTS AND PRODUCTS		
Primer	4.1	490
Color Topcoat	3.8	450
Basecoat/Clear Coat (Combined System) - Limit for either coat	4.5	540
Paper Coating, including Adhesives	2.9	350
Vinyl Coating (Coating on Vinyl)	3.8	450
STRIPPABLE BOOTH COATINGS	2.0	240

302 APPLICATION METHODS FOR SURFACE COATINGS: A person shall employ one of the following for all applications of surface coating containing more than 2 pounds of VOC per gallon (240 g/L) minus exempt compounds:

302.1 A low pressure spray gun; or

302.2 An electrostatic system; or

302.3 A system that atomizes principally by hydraulic pressure, including "airless" and "air assisted airless"; or

302.4 Non-atomizing or non-spraying application methods, such as but not limited to dipping, rolling, or brushing; or

302.5 Any method which is approved by the Administrator of the Federal EPA and the Control Officer as having a transfer efficiency of 65% or greater.

303 CLEANUP OF APPLICATION EQUIPMENT: A person shall comply with the following when using VOC-containing material to clean application equipment:

303.1 Disassemble any spray gun and other application equipment and clean it in:

a. A container which remains covered at all times, except when the application equipment is being handled in the container, or transferred into or out of the container; or

b. A commercially-sold gun cleaning machine which shall be operated and maintained as stipulated in the Air Pollution Permit's Operation and Maintenance (O&M) Plan, or in the absence of its mention in the O&M Plan, according to manufacturer's or distributor's instructions.

303.2 Vapor Pressure Limits: Any person subject to this rule using VOC-solvent to clean coating application equipment shall use only solvent which, as used, has a VOC-vapor pressure below 35 mm Hg at 20° C (68° F), except for sprayless equipment exempted pursuant to subsection 305.6.

304 HANDLING AND DISPOSAL OF VOC:

304.1 Use And Storage: A person shall cover and keep covered each VOC containing material which is not currently in use. A person shall store finishing and cleaning materials in closed or covered leak-free containers.

304.2 Disposal Of VOC And VOC-Containing Material: A person shall store all VOC-containing materials intended for disposal including, but not limited to, rags, waste coatings, waste brushes, waste rollers, waste applicators, waste solvents, and their residues, in closed, leakfree containers which are legibly labeled with their contents and which remain covered when not in use.

305 EXEMPTIONS:

305.1 Categorical Exemptions: This rule does not apply to the following operations:

a. Aerospace coating operations (Rule 348).

b. Architectural coating, including buildings and erected structures (Rule 335).

c. Cleaning: VOC loss from cleaning or stripping a surface for coating or other purpose is regulated by Rule 331.

d. Marine vessel exterior refinishing.

e. Polyester coatings applied to polyester composites.

f. Printing and graphic arts coating (Rule 337).

g. Semiconductor manufacturing (Rule 338).

h. Coating a highway vehicle or mobile equipment (Rule 345).

i. Wood: Coating Wood Furniture (Rule 342); Coating Wood Millwork (Rule 346).

305.2 Exemptions for Qualified Materials: Rule 336 does not apply to the following materials that meet the specific qualification(s) and limitation(s) set forth herein:

a. Leak-Preventing Materials: Sealants, adhesives, caulking, and similar materials used on the following substrates for the primary purpose of leak prevention are exempt from this rule:

(1) Non-metallic substrates; and

(2) Used substrates, post manufacture, such as, but not limited to, old joints and seals on pipe and valve assemblies.

b. Adhesive Use:

(1) Adhesive and adhesive primer applications are exempt from this rule, except for the 2 categories that appear in Table 1, namely adhesive materials applied to other metal parts and products (as defined in Section 231), and adhesives used in paper coating (as defined in Section 233).

(2) Any adhesive exempted by this Rule 336 and to which no other rule in Regulation III specifically applies shall comply with the provisions of Rule 330 (Volatile Organic Compounds) of these Rules & Regulations.

c. Certain Joint Fillers: Caulking and beaded sealants used to fill gaps or to fill joints between surfaces are exempt from this rule, except those used in manufacturing other metal parts and products as defined in Section 231 of this rule, or in the manufacturing of cans.

d. Extreme Performance Coatings: Extreme performance coatings are exempt from the VOC limits of Table 1 when used under the following conditions:

(1) Used on internal combustion engine components that are normally above 250°F (121°C) during use; or

(2) Used at temperatures above 250°F (121°C) on items that are both included under SIC (Standard Industrial Classification, 1987) codes 3661, 3663, 3669, 3677, 3678, 3679, or 3769 and are electronic products in space vehicles and/or are communications equipment. The US Government Printing Office "Standard Industrial Classification Manual, 1987" (and no future editions) is incorporated by reference and is on file at the Maricopa County Air Quality Department, 1001 N. Central Ave., Phoenix, Arizona 85004.

305.3 ECS Use In Lieu Of Equipment/Practice: In lieu of meeting an equipment or work practice standard within Sections 302, 303, or 304, an owner or operator is allowed to instead use an ECS that has a capture efficiency not less than 90% and meets all ECS requirements in Section 306.

305.4 Spray-Gun And VOC-Limit Exemptions: The following are exempt from subsection 301.1, subsection 301.2, and Section 302 of this rule:

a. Coating with an aerosol can.

b. Touch up or repair-coating operations as defined in Sections 250 and 240.

c. Low usage coatings which in aggregate of all formulations do not exceed 55 gallons (208 liters) per year facility-wide if the operator updates usage records of these coatings on each day of their use, pursuant to subsection 501.2.

d. A small surface-coating source (SSCS) as defined in Section 243. However, once a small surface-coating source exceeds either the 15 lb per day or the 2 tons per year limits that are required to maintain SSCS status that facility is permanently subject to the limits of subsection 301.1, subsection 301.2, and Section 302, with the following exception:

(1) For such a facility that does not have either a 15 lb/day or a 2 ton/year VOC-emission limit in an Air Pollution Permit for processes regulated by this rule, an owner or operator may retain the

exemption if s/he agrees in writing to enforceable permit conditions that establish these or stricter limits.

(2) However, a facility that violates its permit limit of either 15 lbs VOC/day or 2 tons VOC/yr. for coating process regulated by this Rule 336 is permanently subject to the limits of subsections 301.1 and 301.2, and Section 302.

e. A Quality Class Q protective coating that is used on equipment, structures, and/or components within a containment facility of a nuclear power plant and is approved in accordance with either ANSI standards N101.2 and N101.4 or with ASTM Standards D3911 and D3843.

f. A tactical military-equipment coating that is approved in a Maricopa County Air Pollution Permit subsequent to a sufficient demonstration by the user that no compliant substitute exists.

305.5 Special Facilities/Operations:

a. Silicone Release Coatings: Silicone release coating operations controlled by an ECS pursuant to subsection 301.2 are exempt from the 85 percent overall control efficiency requirement if the ECS demonstrates at least 70 percent overall control and the coating is applied with a liquid seal air spray system.

b. Bonding Impact Resistant Rubber Lining To Metal: An adhesive and an adhesive-primer are exempt from Table 1 limits, but shall not have a VOC content of material exceeding 850 grams of VOC per liter (7.1 lb/gal), if such adhesive is used to bond sheets/strips of rubber to metal equipment so that such rubber sheathing directly contacts material received by the metal and so protects the metal. This exception does not apply to any other situations where adhesives are used to bond rubber to metal.

305.6 Exemption Of Coating Applicator Cleanup: A person is allowed to use solvent that has at 20° C (68° F) a total VOC vapor pressure above 35 mm Hg for cleaning coating-application equipment, but only if such application equipment does not use spray devices and the same principal solvent is used for cleaning as is used in the coating.

305.7 Low-Usage Allowance for Restricted Guns: A person may employ spray guns otherwise prohibited by Section 302 for use with coatings over 2 lb VOC /gal under the following limited conditions:

a. If VOC emissions from the finishing application station, are captured and directed to an ECS complying with the provisions of Section 306.

b. To coat the inside of pipes and tubes with a wand-style applicator.

c. Using an airbrush or other small gun that has a reservoir capacity not exceeding 250 cc (8.8 fluid ounces) and is used solely for detailing, lettering, touchup, and/or repair.

306 REQUIREMENTS FOR AIR POLLUTION CONTROL EQUIPMENT AND ECS MONITORING EQUIPMENT:

306.1 ECS Control Efficiencies: To meet the requirements pursuant to subsection 301.2, subsection 305.3, or subsection 305.7, an ECS shall be operated as follows:

a. Overall ECS Efficiency: Overall, the ECS shall prevent at least 85% of the mass of the VOC emitted by each coating or process so controlled from entering the atmosphere except as successfully controlled pursuant to the alternative in subsection 306.1c(2).

b. Capture Efficiencies:

(1) For an ECS used pursuant to subsection 301.2 and/or subsection 305.7, capture shall be at least 87%.

(2) For an ECS used pursuant to subsection 305.3, capture shall be at least 90%.

c. Control Efficiency Of The Emissions Processing Subsystem:

(1) The emissions-processing subsystem of the ECS shall reduce the mass of VOC entering it by at least 90 percent; or

(2) Alternative for Very Dilute Input: For VOC input-concentrations of less than 100 ppm (as carbon) at the inlet of the ECS emissions processing subsystem, an ECS' VOC processing subsystem also satisfies the processor efficiency requirements of this rule if:

(a) The VOC output is consistently less than 20 mg VOC/M3 (as carbon) adjusted to standard conditions; and

(b) The ECS consistently shows an overall control efficiency of at least 85% when tested pursuant to subsection 503.3 at VOC input-concentrations exceeding 100 ppm (as carbon).

d. Coating that exceeds the applicable VOC-limits in Table 1 shall be clearly identified such that coating-operators are informed an ECS must be used.

306.2 Operation And Maintenance (O&M) Plan Required for ECS:

a. An owner or operator shall provide and maintain (an) O&M Plan(s) for any ECS, any other emission processing equipment, and any ECS

monitoring devices that are used pursuant to this Rule 336 or to an air pollution control permit.

b. The owner or operator shall submit to the Control Officer for approval the O&M Plans of each ECS and each ECS monitoring device that is used pursuant to this Rule 336.

c. The owner or operator shall comply with all the identified actions and schedules provided in each O&M Plan.

306.3 Providing And Maintaining ECS Monitoring Devices: Any person incinerating, adsorbing, or otherwise processing VOC emissions pursuant to this rule shall provide, properly install and maintain in calibration, in good working order and in operation, devices described in the facility's O&M Plan that indicate temperatures, pressures, rates of flow, or other operating conditions necessary to determine if air pollution control equipment is functioning properly and is properly maintained. Records shall be kept pursuant to Section 502 which demonstrate that the ECS meets the overall control standard required by subsection 306.1.

306.4 O&M Plan Responsibility: An owner or operator of a facility that is required to have an O&M Plan pursuant to subsection 306.2 must fully comply with all O&M Plans that the owner or operator has submitted for approval, but which have not yet been approved, unless notified otherwise by the Control Officer in writing.

SECTION 400 – ADMINISTRATIVE REQUIREMENTS

401 COMPLIANCE SCHEDULE:

401.1 By August 1, 1999:

a. All new recordkeeping provisions shall be in effect, including subsections 501.1c and 501.2a.

b. The intention to use an Emission Control System (ECS) shall be announced to the Control Officer in writing if:

(1) The ECS is used as an alternative to meeting the spray-gun provisions of Section 302; or

(2) The ECS is used as an alternative to meeting the gun cleaning machine provisions of Section 303.

401.2 By November 1, 1999, the following shall be in continuing use:

a. Spray guns required pursuant to Section 302;

b. Cleaning-solvent(s) having the required vapor pressure pursuant to Section 303, and the data sheet(s) confirming the vapor pressure.

401.3 By May 1, 2000, the ECS announced pursuant to subsection 401.1b shall be in continuing use.

SECTION 500 – MONITORING AND RECORDS

501 RECORDKEEPING AND REPORTING: Any person subject to this rule shall comply with the following requirements of subsections 501.1 and 501.2 that apply to materials regulated by this Rule 336. Records shall be retained for 5 years and shall be made available to the Control Officer upon request.

501.1 Current Lists:

a. Maintain a current list of coatings, adhesives, reducers, thinners, gun-cleaning materials, additives, and any other VOC-containing materials regulated by this rule; give the VOC content of material for each as received (before thinning). A complete, neat assemblage of this data meets the requirements for a list. Express VOC content in 1 of 3 forms: pounds VOC per gallon, grams VOC per liter, or the percent VOC by weight along with the specific gravity or density, (2 numbers are required).

b. Less Stringent Recordkeeping for Consistently Low Users: An operator of a facility that always uses less than 2 gallons per day total of thinner and coating (listed in Table 1), meets the listing and recording requirements of subsections 501.1a, 501.1c, and 501.2 if:

(1) All purchase receipts/invoices of VOC-containing material that is regulated by this rule for the most recent 12 months are kept together; and

(2) Current data sheets show the VOC content of material for every VOC containing substance currently used that is regulated by this rule.

c. Facilities That Are Not Small Surface-Coating Sources: Facilities that are not small surface-coating sources shall do the following:

(1) Coatings: For all coatings (except those recorded under the subsection 305.4c low usage allowance), make the following listings for coatings and adhesives that have VOC limits in Table 1:

(a) VOC Before Reducing: The VOC content of each coating as received, minus exempt compounds. (This figure is sometimes called the "EPA Method 24" VOC content on manufacturer's data sheets). If the coating is a multi-part coating, list the VOC content which the manufacturer states the coating will have once

you have mixed all the necessary parts together in the proportions specified by the manufacturer.

(b) List Maximum VOC Content Of Coating As Applied: For each coating that you thin/reduce or add any additive to, record in a permanent log either of the following:

(i) The maximum number of fluid ounces thinner/reducer that you ever add to a gallon of unreduced coating (or maximum g/liter), and the maximum fluid ounces of every other additive you mix into a gallon of the coating; or

(ii) The VOC content of the coating, after adding the maximum amount of thinner/reducer and other additives that you would ever add, as determined by the formula in subsection 255.1.

(2) Applicator Cleanup Solvent: Have a hardcopy of the VOC vapor pressure (VP) at 20°C (68°F) of solvent(s) used to clean spray guns, hoses, reservoirs, and any other coating application equipment. Any one of the following ways of providing the VP data is sufficient:

(a) A current manufacturer's technical data sheet;

(b) A current manufacturer's safety data sheet (MSDS);

(c) Actual test results; or

(d) A letter signed by an official or lab manager of the supplying facility.

501.2 Frequency Of Updating Usage Records: Update your records, showing the type and amount used of each VOC-containing coating or adhesive which is regulated by name or type in Table 1, and update each VOC-containing material, related to surface coating, that is not addressed by Table 1. This includes, but is not limited to, thinners, surfacers, and diluents. Maintain records according to the following schedule:

a. Small Surface-Coating Sources: Small surface-coating sources shall update each month's records of coating use by the end of the following month.

b. All Other Sources: For a source that does not meet the definition of small surface-coating source:

(1) Monthly: Monthly update records of each coating used that complies with the VOC limits in Table 1. Complete a month's update by the end of the following month.

(2) Daily: Daily update the usage of each coating that exceeds its limits in Table 1, including coating exempted by subsection 305.4c.

501.3 Grouping By VOC Content: For purposes of recording usage, coatings and adhesives that are in the same category in Table 1, and have similar VOC content, may be recorded under a name that includes the category name. The highest VOC content among the members of that grouping shall be assigned to that grouping, rounded to the nearest 10th of a pound. To identify what products belong within each group, after each group name and the group's VOC content of material must appear the name of each product in the group and its VOC content of material. **For example:** For flexible plastic parts, you use 20 gallons of primer that has 3.04 lb VOC/gal., 30 gallons of primer having 3.14 lb VOC/gal., and 40 gallons of primer having 2.89 lb VOC/gal. You may record usage as 90 gallons of flexible plastic primer containing 3.1 lb VOC/gal. If grams VOC per liter is used to record VOC content, round off to the nearest whole number of grams.

502 ECS RECORDING REQUIREMENTS:

502.1 On each day an ECS is used at a facility pursuant to this rule, an owner or operator of the facility shall:

a. Record the amount and VOC content of coating, the amount of catalyst/hardener, and the amounts of solvent, reducer, and diluent used that were subject to ECS control pursuant to this Rule 336; and

b. Make a permanent record of the operating parameters of the key systems as required by the O&M Plan; and

c. Make a permanent record of the maintenance actions taken, within 24 hours of the action's completion, for each day or period in which the O&M Plan requires that maintenance be done.

502.2. An explanation shall be entered for scheduled maintenance that is not performed during the period designated for it in the O&M Plan.

503 COMPLIANCE DETERMINATION AND TEST METHODS: When more than one test method is permitted for a determination, an exceedance of the limits established in the rule determined by any of the applicable test methods constitutes a violation of this rule.

503.1 Compliance Determination: The following means shall be used to determine compliance with this rule:

a. Measurement of VOC content of materials subject to Section 301 or Section 302 of this rule shall be conducted and reported using one of the following means:

(1) VOC content of coatings, solvents, and other substances having less than 5% solids will be determined by the test method in subsection 503.2f (BAAQMD Method 31 [April 15, 1992]) or 503.2g (SCAQMD Method 313-91 [April 1997]).

(2) The VOC content of coatings or other materials having 5% or more solids will be determined by the test method in subsection 503.2c (EPA Method 24), 503.2f (BAAQMD Method 31 [April 15, 1992]) or 503.2g (SCAQMD Method 313-91 [April 1997]).

(a) Plastisols, powder coatings, and radiation-cured coatings shall be cured according to the procedures actually used in the coating process being tested before final VOC-emission determinations are made.

(b) In the case of multi-component, polymerizing coatings tested according to 503.1a, Method 24 shall be modified to eliminate the post-mixing dilution-step (that employs toluene or other solvent). Instead, the mixture shall be spread by appropriate technique to form a thin layer, occupying the entire bottom of the foil pan. Techniques included in the method referenced in 503.1b can be used as a guide for such spreading.

b. The VOC content of gaseous emissions entering and exiting an ECS shall be determined by either EPA Method 18 referred to in subsection 503.2b, or EPA Method 25 and its submethod, referred to in subsection 503.2d.

c. Capture efficiency of an ECS shall be determined either by the methods in 503.2e (EPA Method 204 and its submethods), or by using mass balance calculation methods in concert with the methods in 503.2a (EPA Methods 2, 2a, 2c, and 2d).

d. Measurement of air pressure at the center of the spray gun tip and air horns of an air-atomizing spray gun (reference subsection 302.1 and Section 225) shall be performed using an attachable device in proper working order supplied by the gun's manufacturer for performing such a measurement.

e. Temperature measurements shall be done with an instrument with an accuracy and precision of less than one-half degree Fahrenheit (0.25°C) for temperatures up to 480°F (250°C).

503.2 Test Methods Adopted By Reference: The EPA test methods as they exist in the Code of Federal Regulations (CFR) (July 1, 1998), as listed below, are adopted by reference. The other test methods listed here are also adopted by reference, each having paired with it a specific date that identifies the particular version/revision of the method that is adopted by reference. These

adoptions by reference include no future editions or amendments. Copies of test methods referenced in this Section 503 are available at the Maricopa County Air Quality Department, 1001 N. Central Ave., Phoenix, AZ, 85004.

a. EPA Methods 2 ("Determination of Stack Gas Velocity and Volumetric Flow Rate"), 2a ("Direct Measurement of Gas Volume Through Pipes and Small Ducts"), 2c ("Determination of Stack Gas Velocity and Volumetric Flow rate in Small Stacks or Ducts"), and 2d ("Measurement of Gas volumetric Flow Rates in Small Pipes and Ducts"). All 4 of the foregoing methods are in 40 CFR 60, Appendix A.

b. EPA Method 18 ("Measurement of Gaseous Organic Compound Emissions by Gas Chromatography") and its submethods (40 CFR 60, Appendix A).

c. EPA Test Method 24 ("Determination of Volatile Matter Content, Water Content, Density, Volume Solids, and Weight Solids of Surface Coatings") (40 CFR 60, Appendix A).

d. EPA Method 25 ("Determination of Total Gaseous Non-methane Organic Emissions as Carbon") and its submethods (40 CFR 60, Appendix A).

e. EPA Test Methods 204 ("Criteria for and Verification Of a Permanent or Temporary Total Enclosure"), 204a, 204b, 204c, 204d, 204e, and 204f (Appendix M, 40 CFR 51).

f. California's Bay Area Air Quality Management District (BAAQMD) Method 31 (April 15, 1992), "Determination of Volatile Organic Compounds in Paint Strippers, Solvent Cleaners, and Low Solids Coatings."

g. California's South Coast Air Quality Management District (SCAQMD) Method 313-91 (April 1997).

503.3 Test Methods for ECS: For coatings/adhesives controlled pursuant to subsection 302.1 or subsection 305.3:

a. Measurements of VOC emissions from an ECS shall be conducted in accordance with EPA Methods 18 or its submethods, or by Method 25 or its submethods (40 CFR 60, Appendix A).

b. Capture efficiency of an ECS shall be determined by mass balance in combination with ventilation/draft rate determinations done in accordance with subsection 503.3c or with US EPA Test Methods 204, 204a, 204b, 204c, 204d, 204e, and 204f (Appendix M, 40 CFR 51).

c. Ventilation/draft rates shall be determined by EPA Methods 2, 2a, 2c, and 2d (40 CFR 60, Appendix A).

504 FORMULA FOR TOTAL VOC VAPOR PRESSURE: Equivalent to: **VOC COMPOSITE PARTIAL PRESSURE.** Reference subsection 303.2

$$PP_c = \frac{\sum_{i=1}^{n} (W_i)(VP_i) / MW_i}{\frac{W_w}{18} + \sum_{i=1}^{m} \frac{W_{ej}}{MW_{ej}} + \sum_{i=1}^{n} \frac{W_i}{MW_i}}$$

W_i = Weight of the "*i*"th VOC compound in grams

W_w = Weight of water in grams

W_{ej} = Weight of the "*j*"th non-precursor compound in grams

MW_i = Molecular weight of the "*i*"th VOC compound in grams per gram mole, e.g., one gram-mole of isopropyl alcohol weighs 60 grams

MW_{ej} = Molecular weight of the "*j*"th non-precursor compound, e.g., 1 gram-mole of acetone weighs 58 grams

PP_c = VOC composite partial pressure at 20°C in mm mercury (Hg)

VP_i = Vapor pressure of the "*i*"th VOC compound at 20°C in mm Hg

18 = Weight of one gram-mole of water

REGULATION III – CONTROL OF AIR CONTAMINANTS

RULE 337
GRAPHIC ARTS

INDEX

SECTION 100 – GENERAL

101 PURPOSE

102 APPLICABILITY

103 EXEMPTIONS

SECTION 200 – DEFINITIONS

201 ADHESIVE

202 ALCOHOL

203 ALCOHOL SUBSTITUTE

204 BATCH

205 CIRCUITRY PRINTING

206 CLEANING SOLUTION

207 DIGITAL PRINTING

208 EMISSION CONTROL SYSTEM (ECS)

209 EXTREME PERFORMANCE

210 FLEXOGRAPHIC PRINTING

211 FOUNTAIN SOLUTION

212 GRAPHIC ARTS

213 GRAPHIC ARTS COATING

214 GRAPHIC ARTS MATERIAL

215 GRAPHIC ARTS OPERATION

216 GRAVURE PRINTING

217 HEATSET

218 LETTERPRESS PRINTING

219 LITHOGRAPHIC PRINTING

220 NON-HEATSET

221 NON-POROUS SUBSTRATE

222 OFFSET LITHOGRAPHIC PRINTING

223 OVERALL CONTROL EFFICIENCY

224 POROUS SUBSTRATE

225 PRINTING

226 PRINTING INK

227 RADIATION-CURED INKS AND COATINGS

228 SCREEN PRINTING

229 SHEET-FED

230 SOLVENT

231 SPECIAL PURPOSE COATING

232 VAPOR PRESSURE

233 VOC COMPOSITE VAPOR PRESSURE

234 VOC-CONTAINING MATERIAL

235 WEB

SECTION 300 – STANDARDS

301 MANUFACTURERS AND SUPPLIERS

302 LITHOGRAPHIC AND LETTERPRESS OPERATIONS

303 ROTOGRAVURE AND FLEXOGRAPHIC OPERATIONS

304 SCREEN PRINTING OPERATIONS

305 OTHER GRAPHIC ARTS OPERATIONS NOT COVERED BY SECTIONS 302, 303 OR 304 OF THIS RULE

306 WORK PRACTICES – STORAGE, HANDLING AND DISPOSAL OF VOC-CONTAINING MATERIAL

307 OPERATION AND MAINTENANCE (O&M) PLAN REQUIREMENTS FOR AIR POLLUTION CONTROL EQUIPMENT AND APPROVED EMISSION CONTROL SYSTEM (ECS)

SECTION 400 – ADMINISTRATIVE REQUIREMENTS

401 COMPLIANCE SCHEDULE

SECTION 500 – MONITORING AND RECORDS

501 PROVIDING AND MAINTAINING MONITORING DEVICES

502 RECORDKEEPING AND REPORTING

503 COMPLIANCE DETERMINATION – TEST METHODS

Adopted 04/06/92
Revised 04/03/96
Revised 11/20/96
Revised 01/12/11
Revised 08/17/11

MARICOPA COUNTY
AIR POLLUTION CONTROL REGULATIONS
REGULATION III – CONTROL OF AIR CONTAMINANTS

RULE 337
GRAPHIC ARTS

SECTION 100 – GENERAL

101 PURPOSE: To limit the emissions of volatile organic compounds (VOCs) to the ambient air from graphic arts operations.

102 APPLICABILITY: This rule applies to all VOC-containing materials associated with graphic arts operations. This includes, but is not limited to the prepress and press operations; and the cleaning materials and processes associated with such operations.

103 EXEMPTIONS:

103.1 Total Categorical Exemptions: This rule does not apply to the following operations:

a. Circuitry printing and other associated printing performed for labeling, logo, or identification purposes on a printed circuit, its substrate, its immediate covering, or its immediate encapsulant by a circuitry printer.

b. Coating applications that are considered coating operations but are not performed in association with a printing operation.

c. Printing conducted on office and personal printers such as ink jet, bubble jet, and laser printers.

103.2 Partial Exemptions: Sections 302.1, 303.1, 304.1 and 305.1(a) of this rule do not apply to any graphic arts operation whose total VOC emissions from all graphic arts and related coating operations prior to control are less than 25 tons per calendar year and 4,200 pounds per month. Except as otherwise directed by air pollution permit, any graphic arts operation that becomes subject to the provisions of Section 302.1 of this rule by exceeding either the monthly or yearly threshold amounts shall remain subject to these provisions even if monthly or annual emissions later fall back below these thresholds. The following are exempt from the VOC limitations of this rule but shall comply with the work practices listed in

Section 306 of this rule and the recordkeeping requirements in Section 502.5 of this rule. For the purpose of determining exemptions, VOC substrate retention factors of not more than 20% (for heatset inks) or 95% (for non-heatset inks) shall be applied.

a. Graphic arts operations, including surface preparation and cleanup solvents, which do not exceed a threshold limit of 225 pounds (100 kg) of VOC per month before controls.

b. Any radiation-cured inks and coatings.

c. Any digital printing operation.

SECTION 200 – DEFINITIONS: For the purpose of this rule, the following definitions shall apply, in addition to those definitions found in Rule 100 (General Provisions and Definitions) of these rules. In the event of any inconsistency between any of the Maricopa County air pollution control rules, the definitions in this rule take precedence.

201 **ADHESIVE –** A material applied for the primary purpose of bonding two surfaces together by surface attachments. Adhesives may be used to facilitate the attachment of two surfaces or substances in varying degrees of permanence.

202 **ALCOHOL –** A volatile organic compound – such as isopropanol, normal-propanol, or ethanol – of alkane structure consisting of fewer than six carbon atoms and having a single OH^- (hydroxyl) group and no other non-alkane attachments.

203 **ALCOHOL SUBSTITUTE –** A wetting agent, used to replace some or all of the alcohol in fountain solutions, and usually containing volatile organic compounds such as glycols and glycol ethers.

204 **BATCH –** A supply of fountain solution or cleaning solution that is prepared and used without alteration until completely used or removed from the printing process. For the purpose of this rule, this term may apply to solutions prepared in either discrete solutions or solutions that are continuously blended with automatic mixing units.

205 **CIRCUITRY PRINTING –** Any graphic arts operation which either uses ink(s) with specific electrical properties to print an electrical circuit, or prints a circuit pattern that is made into an electrical circuit through further processing.

206 **CLEANING SOLUTION –** Any liquid, including automatic blanket and roller wash system or manual blanket wash and roller wash, used to remove ink and debris from the operating surfaces of a printing press or from any of the attached parts of a press.

207 **DIGITAL PRINTING –** A method of printing that does not use a physical master, stencils or plates but uses an electronic output device to transfer variable data, in the form of an image, from a computer to a variety of substrates. Digital printing methods include,

but are not limited to, inkjet printing, electrophotographic printing, dye sublimation printing, thermal wax printing and solid ink printing.

208 **EMISSION CONTROL SYSTEM (ECS) –** A system for reducing emissions of organic compounds, consisting of both collection and control devices that are approved in writing by the Control Officer and are designed and that are operated in accordance with good engineering practice.

209 **EXTREME PERFORMANCE –** An ink or coating used in screen printing on a non-porous substrate that is designed to resist or withstand either of the following:

209.1 More than two years of outdoor exposure; or

209.2 Exposure to industrial-grade chemicals, solvents, acids, detergents, oil products, cosmetics, temperatures exceeding 170 °F, vacuum-forming, embossing or molding.

210 **FLEXOGRAPHIC PRINTING –** The application of words, designs or pictures by a roll-printing technique in which the image-carrying surface is raised above the surface of the printing roll and the image carrier is made of flexible rubber or other elastomeric material. The image is transferred to the substrate through first applying ink to a smooth roller which in turn transfers the ink onto the raised pattern of the rubber or elastomeric image carrier fastened around a second roller, which then transfers the ink onto the substrate.

211 **FOUNTAIN SOLUTION –** The solution applied to the image plate to maintain the hydrophilic properties of the non-image areas, and to keep the non-image areas free from ink.

212 **GRAPHIC ARTS –** All printing processes including but not limited to digital, screen, gravure, letterpress, flexographic and lithographic printing processes, including related coating and laminating processes.

213 **GRAPHIC ARTS COATING –** A relatively unbroken layer of material applied onto or impregnated into a substrate. A material applied after the application of inks to the substrate that serves to enhance or protect the printed substrate and includes graphic arts varnish, water-based, or radiation-cured formulation of resins, solvents, cosolvents and other additives. Equipment capable of both coating and printing is considered a “printing operation” for this rule. Coating applications that are not performed in association with a printing operation are considered coating operations and not “graphic arts operations.”

214 **GRAPHIC ARTS MATERIAL –**Any ink, varnish, coating or adhesive, including added thinner or retarder, used in printing or related coating or laminating processes.

215 **GRAPHIC ARTS OPERATION –** All the graphic arts processes and activities which are located on one or more contiguous or adjacent properties and are under the control of the same person (or persons under common control).

216 **GRAVURE PRINTING –** An intaglio process in which ink is carried in minute, etched, or engraved wells on a roll or cylinder. Images are transferred onto a substrate through first applying ink to the etched roll or cylinder, wiping the lands between the cells free of ink with a doctor blade, and rolling the cylinder over the substrate so that the surface of the substrate is pressed into the cells, transferring the ink onto the substrate.

217 **HEATSET –** A lithographic web printing process where heat is used to evaporate ink oils from the printing ink.

218 **LETTERPRESS PRINTING –** A method in which the image area is raised relative to the non-image area and the ink is transferred to the paper directly from the image surface.

219 **LITHOGRAPHIC PRINTING –** A planographic method of printing where the image and non-image areas of the printing plate are chemically differentiated; the image area is oil-receptive and the non-image area is water-receptive. This method differs from other printing methods, where the image is on a raised or recessed surface.

220 **NON-HEATSET –** A lithographic printing process where the printing inks are set by absorption or oxidation of the ink oils. For the purpose of this rule, use of an infrared heater or printing conducted using radiation-cured inks is considered non-heatset.

221 **NON-POROUS SUBSTRATE –** Any substrate whose surface prevents penetration by water.

222 **OFFSET LITHOGRAPHIC PRINTING –** A planographic method of printing in which the image and non-image areas are on the same plane and the ink is transferred from a plate to an intermediary surface, typically a rubber blanket, which in turn transfers the image to the substrate. “Offset lithographic printing” includes the application of overprint coatings.

223 **OVERALL CONTROL EFFICIENCY –** The overall control efficiency of an ECS is determined by multiplying the ECS efficiency by the destruction efficiency of the control device expressed as a percentage.

224 **POROUS SUBSTRATE –** A substrate whose surface does not prevent penetration by water.

225 **PRINTING OPERATION –** An operation that imparts color, design, pattern, alphabet or numerals onto a substrate. It differs from coating in that its principal intent is to accomplish such visual/spatial outcome(s) rather than for other purposes commonly accomplished by using coatings.

226 **PRINTING INK –** A fluid or viscous formulation used in printing, impressing or transferring an image onto a substrate.

227 **RADIATION-CURED INKS AND COATINGS –** A printing ink or graphic arts coating that dries by polymerization reaction by ultraviolet or electron beam radiation.

228 **SCREEN PRINTING –** A process of passing printing ink through a screen (a taut web or fabric) to make an imprint on a substrate. A refined form of stencil has been applied to the screen such that the stencil openings determine the form and dimensions of the imprint.

229 **SHEET-FED –** A lithographic printing process in which individual sheets of substrate are fed to the press sequentially.

230 **SOLVENT –** Organic compounds that are used as diluents, thinners, dissolvers, viscosity reducers, cleaning agents or for a similar purpose.

231 **SPECIAL PURPOSE –** Printing or coating on polyethylene, polyester and foil substrates for food packaging, health care products, fertilizer bags, or liquid-tight containers.

232 **VAPOR PRESSURE –** The pressure exerted at a uniform temperature by the gas of a substance when the gas is in equilibrium with the liquid (or solid) phase of that substance.

233 **VOC VAPOR PRESSURE (VOC COMPOSITE PARTIAL PRESSURE) –**The sum of the partial pressures of the compounds defined as VOCs, calculated according to the formula in Section 503.4 of this rule.

234 **VOC-CONTAINING MATERIAL –** Any chemical or item that contains an organic compound that participates in atmospheric photochemical reactions, except the non-precursor organic compounds. “VOC-containing material” includes but is not limited to rags, waste coatings, waste brushes, waste rollers, waste applicators, waste solvents, and their residues are used in the surface preparation, cleanup, or removal of inks and surface coatings associated with graphic arts operations.

235 **WEB –** A continuous substrate capable of being rolled at any point during the coating process.

SECTION 300 – STANDARDS

301 **MANUFACTURERS AND SUPPLIERS:** A person selling, offering for sale, supplying for use, or manufacturing for sale within Maricopa County any VOC-containing material for use in graphic arts operations shall provide a material safety data sheet (MSDS) or product data sheet showing the material name, manufacturer's name, specific mixing instructions (if applicable) and VOC content as supplied. The VOC content requirement does not apply to radiation-cured inks and coatings.

302 LITHOGRAPHIC AND LETTERPRESS OPERATIONS: VOC emissions from all lithographic and letterpress operations are limited to the following:

302.1 Materials: An owner or operator of a lithographic press or letterpress shall limit VOC emissions from inks, varnishes, coatings, or adhesives, as applied, to less than or equal to 2.5 pounds per gallon (lbs/gal) (300 grams per liter [g/l]), less water and non-precursor organic compound unless VOC emissions are controlled by an ECS as described in Section 302.4 of this rule. In addition, the owner or operator shall follow the work practices described in Section 306 of this rule.

302.2 Fountain Solution: An owner or operator of a lithographic printing press shall limit the combined total volume of alcohol, alcohol substitute, and any other VOC in each fountain solution source to the percentages specified in Table 337–1.

Table 337–1. Maximum VOC Content in Percent by Weight (as Applied) for Fountain Solutions for Lithographic Printing.

	Maximum VOC Content for:		
Press Type	**Fountain Solutions Containing Alcohol**	**Fountain Solutions Containing Alcohol Refrigerated at or Below 60 °F (15.5 °C)**	**Fountain Solutions Containing Alcohol Substitutes**
Heatset Web – Prior to Jan. 12, 2012: – On or after Jan. 12, 2012:	 5.0 % 1.6 %	 8.5 % 3.0%	 5% 5%
Sheet-Fed	5%	8.5%	5%
Cold-Set Web	None	None	5%

302.3 Cleaning Solutions: An owner or operator of a lithographic printing press or letterpress shall reduce VOC emissions from cleaning solutions by following the work practices described in Section 306 of this rule and one of the following:

a. Use cleaning materials with a VOC composite vapor pressure less than 10 mm Hg at 20 °C; or

b. Use cleaning materials containing less than 70 weight percent VOC.

302.4 Emission Control System (ECS):

a. The VOC material limits of Section 302.1 of this rule do not apply when emissions of VOC to the atmosphere from the lithographic or letterpress printing operations are controlled by an ECS that meets one of the requirements listed in Table 337–2; and

b. The dryer pressure shall be maintained lower than the press room air pressure such that air flows into the dryer at all times when the press is operating.

Table 337–2. Minimum ECS Control Efficiencies for Lithographic and Letterpress Printing Operations.

ECS Installation Date	Minimum Control Efficiency
ECS installed prior to January 12, 2011	90 percent by weight control efficiency for VOC emissions from the dryer exhaust vent.
ECS installed on or after January 12, 2011	95 percent by weight control efficiency for VOC emissions from the dryer exhaust vent
Any installation date	Concentration at or below 20 ppmv as hexane on a dry basis, as measured at the dryer exhaust vent.

302.5 Operation and Maintenance (O&M) Plan: The owner or operator of an ECS used to meet the requirements of this rule shall comply with the requirements in Section 307 of this rule.

303 ROTOGRAVURE AND FLEXOGRAPHIC OPERATIONS:

303.1 Inks, Coatings and Adhesives: The owner or operator of rotogravure or flexographic press shall limit VOC emissions from inks, coatings, and adhesives as listed in Table 337–3 or by an ECS as described in Section 303.3 of this rule. In addition, the owner or operator shall follow the work practices described in Section 306 of this rule.

Table 337–3. Maximum VOC Emissions for Materials Used in Rotogravure and Flexographic Operations.

	Maximum VOC Emissions	
Graphic Arts Material	**lbs/gal**	**grams/liter**
Ink	2.5	300
Flexographic Ink Porous Substrate: – Prior to Jan. 12, 2012 – On or after Jan. 12, 2012	 2.5 1.9	 300 225
Flexographic Ink Non-Porous Substrate	2.5	300
Coating	2.5	300
Adhesive: – Prior to Jan. 12, 2012 – On or after Jan. 12, 2012	 2.5 1.25	 300 150

303.2 Cleaning Solutions: An owner or operator of a rotogravure or flexographic press shall reduce VOC emissions from cleaning solutions by following the work practices as described in Section 306 of this rule.

303.3 Emission Control System (ECS): The limits of Section 303.1 of this rule do not apply when emissions of VOC to the atmosphere from the rotogravure or flexographic printing operations are controlled by an ECS that maintains a dryer pressure lower than the press room air pressure such that air flows into the dryer at all times when the press is operating. In addition, an ECS shall either:

a. Meet one of the requirements listed in Table 337–4, or

b. Reduce the VOC emissions from the dryer exhaust vent by at least 90 percent by weight, and maintain an overall capture and control efficiency of at least 65 percent by weight.

Table 337–4. Minimum ECS Efficiencies for Rotogravure and Flexographic Printing Operations.

Press and ECS Installation Dates	Minimum Overall Capture and Control Efficiency	Minimum Capture Efficiency	Minimum Control Efficiency
Press installed prior to March 14, 1995 and controlled by an add-on ECS installed prior to January 12, 2011	65 %	75 %	90 %
Press installed prior to March 14, 1995 and controlled by an add-on ECS installed on or after January 12, 2011	70 %	75 %	95 %
Press installed on or after March 14, 1995 and controlled by an add-on ECS whose first installation date was prior to January 12, 2011	75 %	85 %	90 %
Press installed on or after March 14, 1995 and controlled by an add-on ECS whose first installation date was on or after January 12, 2011	80 %	85 %	95 %

303.4 Operation and Maintenance (O&M) Plan: The owner or operator of an ECS used to meet the requirements of this rule shall comply with the requirements in Section 307 of this rule.

304 SCREEN PRINTING OPERATIONS:

304.1 An owner or operator of a screen printing operation shall limit the VOC emissions from screen printing inks, coatings and adhesives as listed in Table 337–5 or by an ECS as described in Section 304.3 of this rule. In addition, the owner or operator shall follow the work practices described in Section 306 of this rule.

Table 337–5. Maximum VOC Emissions for Screen Printing Inks, Coatings, and Adhesives.

	Maximum VOC Emissions	
Material	**lbs/gal**	**grams/liter**
Inks and Coatings	3.3	400
Adhesives	1.25	150
Special Purpose, Extreme Performance	6.7	800

304.2 Cleaning Solutions: An owner or operator of a screen printing press shall reduce VOC emissions from cleaning solutions by following the work practices as described in Section 306 of this rule.

304.3 Emission Control System (ECS):

a. The VOC material limits of Section 304.1 of this rule do not apply when emissions of VOC to the atmosphere from the lithographic or letterpress printing operations are controlled by an ECS that meets one of the requirements listed in Table 337–4; and

b. The dryer pressure shall be maintained lower than the press room air pressure such that air flows into the dryer at all times when the press is operating.

304.4 Operation and Maintenance (O&M) Plan: The owner or operator of an ECS used to meet the requirements of this rule shall comply with the requirements in Section 307 of this rule.

305 OTHER GRAPHIC ARTS OPERATIONS NOT COVERED BY SECTIONS 302, 303, OR 304 OF THIS RULE:

305.1 Limits of VOC Emissions: Any graphics arts operation which emits 25 tons per calendar year and 4200 pounds per month of VOC from all graphic arts and related coating operations shall: The owner or operator of any graphic arts operation whose VOC emissions from all graphic arts and related coating operations prior to control are at least 25 tons per calendar year or 4,200 pounds per month shall follow the work practices described in Section 306 of this rule. In addition, the owner or operator shall:

a. Limit the VOC emissions from inks, varnishes, coatings, or adhesives, as applied to 2.5 lb/gal (300 g/l); or

b. Install, operate and maintain an ECS that maintains a dryer pressure lower than the press room air pressure such that air flows into the dryer at all times when the press is operating. In addition, an ECS shall:

(1) Meet one of the requirements listed in Table 337–4; or

(2) Reduce the VOC emissions from the dryer exhaust vent by at least 90 percent by weight, and maintain a minimum overall capture and control efficiency of at least 65 percent by weight.

305.2 Cleaning Solutions: An owner or operator of a graphic arts printing press shall reduce VOC emissions from cleaning solutions by following the work practices as described in Section 306 of this rule.

305.3 Operation and Maintenance (O&M) Plan: The owner or operator of an ECS used to meet the requirements of this rule shall comply with the requirements in Section 307 of this rule.

306 WORK PRACTICES – STORAGE, HANDLING AND DISPOSAL OF VOC-CONTAINING MATERIAL: For the purpose of this rule, "in use" is the active application of contents to a substrate by pouring, siphoning, brushing, rolling, padding, wiping or other methods. For the purpose of this rule, "containers" include but are not limited to drums, buckets, cans, pails, and trays. An owner or operator of any graphic arts printing operation shall store, handle, and dispose of VOCs or VOC-containing material in a way to prevent the evaporation of VOCs to the atmosphere. Work practices limiting VOC emissions include but are not limited to the following:

306.1 Labeling of Containers: All containers that are 1 gallon or larger used for collection of VOC-containing material shall be clearly identified with their contents.

306.2 Use of VOC-Containing Materials: An owner or operator shall not leave containers of ink, coating, adhesive or fountain solution or any other VOC-containing material open when not in use.

306.3 Storage and Disposal: An owner or operator shall not use open containers for the storage or disposal of VOC-containing materials.

306.4 Minimization of Spills: An owner or operator shall implement procedures to minimize spills of any VOC-containing material during handling and transfer to and from containers, enclosed systems, waste receptacles and other equipment.

306.5 Conveyance of VOC-Containing Materials: All VOC-containing materials including VOC-containing cleaning materials shall be conveyed from one location to another in labeled, closed containers or pipes.

307 OPERATION AND MAINTENANCE (O&M) PLAN REQUIREMENTS FOR AIR POLLUTION CONTROL EQUIPMENT AND APPROVED EMISSION CONTROL SYSTEMS (ECS): An owner, operator, or person subject to this rule must provide, properly install and maintain in calibration, in good working order, and in operation air pollution control equipment required by this rule.

307.1 An owner, operator, or person subject to this rule must provide and maintain readily available on-site at all times (an) O&M Plan(s) for any ECS and any ECS monitoring devices that are used under this rule or an air pollution control permit.

307.2 An owner, operator, or person subject to this rule must submit to the Control Officer for review every O&M Plan(s) for any ECS including any ECS monitoring device that is used under this rule or required under an air pollution control permit.

307.3 An owner, operator, or person subject to this rule operating an ECS must install, maintain, and accurately calibrate monitoring devices described in the O&M Plan(s) including, but not limited to, monitoring devices that measure pressure differentials and other operating conditions necessary to determine if control devices are functioning properly.

307.4 An owner, operator, or person who is required to have an O&M Plan for any ECS including any ECS monitoring devices must fully comply with all elements of an O&M Plan(s) including, but not limited to every action, schedule, and condition identified in each O&M Plan.

307.5 An O&M Plan for any ECS including any ECS monitoring devices must include all of the following information:

a. ECS equipment manufacturer,

b. ECS equipment model,

c. ECS equipment identification number or identifier that owner, operator, or person subject to this rule assigns to such ECS equipment when the manufacturer's equipment identification number is unknown, and

d. Information required by Section 502.4 of this rule.

307.6 The owner, operator, or person subject to this rule, who receives a written notice from the Control Officer that the O&M Plan is deficient or inadequate, must make written revisions to the O&M Plan for any ECS including any ECS monitoring devices and must submit such revised O&M Plan to the Control Officer within five working days of receipt of the Control Officer's written notice, unless such time period is extended by the Control Officer, upon written request, for good

cause. During the time that such owner, operator, or person subject to this rule is preparing revisions to the O&M Plan, such owner, operator, or person must still comply with all requirements of this rule.

SECTION 400 – ADMINISTRATIVE REQUIREMENTS

401 COMPLIANCE SCHEDULE: An owner or operator who chooses to, or is required to, comply with the new emission limits by installing or increasing the efficiency of an ECS under Section 302.4, 303.3, 304.3, or 305.1 of this rule, shall meet the following milestones:

401.1 Submit a compliance plan, by April 12, 2011, or within three (3) months of becoming subject to the rule, to the Control Officer for approval which describes the method(s) used to achieve full compliance with the rule. The compliance plan shall specify dates for completing increments of progress, such as the contractual arrival date of new control equipment. The Control Officer may require an owner or operator submitting the compliance plan to also submit subsequent reports on progress in achieving compliance; and

401.2 Attain full compliance with all of the standards in this rule by January 12, 2012, or within twelve (12) months of becoming subject to the rule.

SECTION 500 – MONITORING AND RECORDS

501 PROVIDING AND MAINTAINING MONITORING DEVICES:

501.1 ECS Monitoring Device(s): An owner or operator of an ECS pursuant to this rule shall install, maintain, and calibrate monitoring devices described in an O&M Plan. The monitoring devices shall measure temperatures, pressures, rates of flow, or other operating conditions necessary to determine if air pollution control equipment is functioning properly. Each ECS that is operated in compliance with this rule shall be equipped with monitoring device(s) capable of demonstrating that the ECS is operating in a manner that assures compliance with this rule. The monitoring device(s) shall be installed, calibrated, maintained, and operated according to their manufacturers' instructions and the O&M Plan.

501.2 Monitoring Fountain Solution:

a. An owner or operator of any graphic arts operation shall determine the VOC concentration of each fountain solution source containing any alcohol with a refractometer, a hydrometer, or conductivity meter. The instrument shall:

(1) Have a visual readout (analog or digital) with an accuracy of ±2 percent of the instrument's full scale, or ±0.5 percent absolute (such as for meter readings given in percent); and

(2) Be installed, calibrated, maintained, and operated according to the manufacturer's instructions and the O&M Plan.

b. The temperature of a refrigerated fountain solution shall be determined by the use of a temperature monitoring device. Each temperature monitoring device used for the purpose of this section shall be calibrated and accurate to ±0.5 °F.

502 RECORDKEEPING AND REPORTING: An owner, operator or person subject to this rule shall comply with the recordkeeping and reporting requirements of this section. Records can consist of but are not limited to purchase orders, invoices, receipts, usage records, MSDS, and hazardous wastes manifests. Any records required by this rule shall be retained for five (5) years and be made available to the Control Officer upon request. Records may be kept in either electronic or paper format.

502.1 Current Materials List: The owner or operator of a graphic arts operation shall maintain a current list of inks, coatings, adhesives, fountain-solution alcohol(s) and alcohol substitutes, thinners, cleaners, and any other VOC-containing materials used that includes at a minimum:

a. Material Name: Record the name/code/manufacturer and the appropriate material type category of inks, coatings, adhesives, fountain-solution alcohol(s) and alcohol substitutes, thinners, cleaning solutions, and any other VOC-containing materials used in the graphic arts processes; and

b. VOC Content: The VOC content of each material listed as pounds of VOC per gallon or grams of VOC per liter; and

c. Product Data Sheet: Specific mixing instructions and the VOC content as applied for products requiring dilution.

d. VOC Vapor Pressure: For each cleaning solution, list the VOC composite vapor pressure (VP) at 20 °C (68 °F) by providing one of the following:

(1) A current manufacturer's technical data sheet listing vapor pressure; or

(2) A current manufacturer's safety data sheet (MSDS) listing vapor pressure; or

(3) Actual vapor pressure test results.

502.2 Material Usage Records for Graphic Arts Materials and Cleaning Solutions: The owner or operator shall update records showing the type and amount consumed of each graphic-arts ink, varnish, coating, adhesive, fountain solution, blanket wash, and all other cleaning solutions from all graphic arts and related coating operations prior to any control according to one of the following schedules:

a. Any Graphic Arts Operation Whose Total VOC Emissions From All Graphic Arts and Related Coating Operations Prior to Control are at Least 25 Tons Per Calendar Year or 4,200 Pounds Per Month: The owner or operator shall maintain material usage records:

(1) Daily, if noncompliant materials are used in conjunction with an emissions control system; or

(2) Monthly, if the facility uses materials complying with the limits in Sections 302, 303, 304, or 305 of this rule, and each material served by a control device is identified as such.

b. Any Graphic Arts Operation Whose Total VOC Emissions From All Graphic Arts and Related Coating Operations Prior to Control are Less Than 25 Tons Per Calendar Year or 4,200 Pounds Per Month: The owner or operator shall maintain material usage records monthly.

502.3 Fountain Solutions:

a. Alcohol-Containing Fountain Solutions:

(1) Daily: An owner or operator shall record the temperature of the refrigerated alcohol solution.

(2) Weekly: An owner or operator shall:

(a) Record the percentage of VOC for each different batch of fountain solution containing alcohol; and

(b) Maintain a record of the names and the most current mixing ratio for each different batch of all alcohol, alcohol-substitutes, and water used in making each fountain solution for that source.

b. Fountain Solutions Containing Alcohol Substitutes:

(1) Monthly: An owner or operator shall:

(a) Record the mixing ratio of all alcohol-substitutes to water, for each fountain solution source on a press which never uses alcohol; and

(b) Maintain a current list of the names of all fountain solutions used that contain alcohol-substitutes.

502.4 ECS Recordkeeping Requirements: The owner or operator of the facility shall document the installation, maintenance, and calibration of ECS monitoring devices described in an O&M Plan in the following manner:

a. Initial Installation: Make a permanent record of the date of installation of the ECS.

b. Daily: Make a permanent record of the operating parameters of the key systems as required by the O&M Plan. If the ECS was not operational due to equipment malfunction or not being used at any time during the day, record this fact in the permanent record; and

c. Within 24 hours of a completed scheduled routine maintenance, make a permanent record of the maintenance actions taken for each day or period in which the O&M Plan requires that maintenance be done; or

d. Enter an explanation for scheduled maintenance that is not performed during the period designated for it in the O&M Plan.

502.5 Facilities Claiming an Exemption: The owner or operator claiming an exemption under Section 103 of this rule shall document the quantity of VOC materials used and keep sufficient records of the basis of such calculations to justify the exemption status.

503 COMPLIANCE DETERMINATION – TEST METHODS: An exceedance of the limits established in this rule determined by any of the applicable test methods constitutes a violation of this rule. The EPA test methods, ASTM International (ASTM) standards and other documents as they exist in the Code of Federal Regulations (CFR) as listed below, are adopted and incorporated by reference in Appendix G of the Maricopa County Air Pollution Control Regulations. These documents are available Maricopa County Air Quality Department, 1001 N. Central Ave., Phoenix, AZ 85004; or by calling (602) 506-0169 for information. ASTM standards are also available from ASTM International, 100 Barr Harbor Drive, P.O. Box C700, West Conshohocken, PA 19428, or from its website at www.astm.org.

503.1 VOC Content of Materials:

a. The VOC content of graphic arts materials regulated by Sections 302, 303, 304 or 305 of this rule shall be determined using one of the following:

(1) EPA Reference Method 24 – Determination of Volatile Matter Content, Water Content, Density, Volume Solids, and Weight Solids of Surface Coatings, 40 CFR 60, Appendix A–7; or

(2) EPA Reference Method 24A – Determination of Volatile Matter Content and Density of Publication Rotogravure Inks and Related Publication Rotogravure Coatings, 40 CFR 60, Appendix A–7; or

(3) A material safety data sheet (MSDS) or product data sheet showing the material name and VOC content as applied.

b. Calculation of the VOC content of fountain solutions shall place the entire volume of the sample in the denominator, e.g., including water, alcohol, non-precursors, and all other solutes, such that the entire volume of the sample is included in the calculations.

c. Any hydrometer used for the purpose of this section shall be accurate within ±2 percent of the meter's full scale or ±0.5 percent absolute (such as for meter readings given in percent) and be calibrated using one of the following methods:

(1) ASTM E100 – 10 Standard Specification for ASTM Hydrometers.

(2) ASTM E126 – 05a Standard Test Method for Inspection, Calibration, and Verification of ASTM Hydrometers.

(3) A standard solution for the type of alcohol used in the fountain solution. The department is defining a standard solution as any solution that has a precisely known concentration.

503.2 Determining the Temperature of a Refrigerated Fountain Solution: The temperature of a refrigerated fountain solution shall be determined by the use of a temperature monitoring device. Each temperature monitoring device used for the purpose of this section shall be accurate to ±0.5 °F and calibrated by one of the following methods:

a. ASTM standards (ASTM E1-07 Standard Specification for ASTM Liquid-in-Glass Thermometers); or

b. National Institute of Standards and Technology (NIST) traceable calibration certificate; or

c. Manufacturer's recommended method of calibration.

503.3 Emission Testing:

a. Capture and control efficiency of an emissions control device shall be determined according to:

(1) "Guidelines for Determining Capture Efficiency", January 9, 1995, Candace Sorrell, Source Characterization Group A, Office of Air Quality Planning and Standards, US EPA.

(2) EPA Reference Method 204 – Criteria for and Verification of a Permanent or Temporary Total Enclosure, 40 CFR 51, Appendix M; or applicable Subparts 204A, 204B, 204C or 204D.

(3) EPA Reference Method 18 – Measurement of Gaseous Organic Compound Emissions by Gas Chromatography, 40 CFR 60, Appendix A–6.

(4) EPA Reference Method 25 – Determination of Total Gaseous Nonmethane Organic Emissions as Carbon, 40 CFR 60, Appendix A–7; or applicable Subparts 25A or 25B.

503.4 Vapor Pressure: The total composite partial vapor pressure of all VOCs in a solution shall be determined by one of the following methods:

a. ASTM D2879-97(2007) Standard Test Method for Vapor Pressure-Temperature Relationship and Initial Decomposition Temperature of Liquids by Isoteniscope; or

b. Calculations using certified data from a laboratory or manufacturer revealing the exact formulation; or

c. A Material Safety Data Sheet (MSDS) or product data sheet showing the material name and VOC vapor pressure; or

d. Calculating VOC composite partial vapor pressure as follows:

$$PPc = \frac{\sum_{i=1}^{n} \frac{(Wi)(VPi)}{MWi}}{\frac{Ww}{MWw} + \sum_{c=1}^{n} \frac{Wc}{MWc} + \sum_{i=1}^{n} \frac{Wi}{MWi}}$$

Where:

W_i = Weight of the "*i*"th VOC compound, in grams
W_w = Weight of water, in grams
W_c = Weight of exempt compound, in grams
MW_i = Molecular weight of the "*i*"th VOC compound, in g/g-mol
MW_w = Molecular weight of water, in g/g-mol
MW_c = Molecular weight of exempt compound, in g/g-mol
PP_c = VOC composite partial vapor pressure at 20 °C, in mm Hg
VP_i = Vapor pressure of the "*i*"th VOC compound at 20 °C, in mm Hg

REGULATION III – CONTROL OF AIR CONTAMINANTS

RULE 338
SEMICONDUCTOR MANUFACTURING

INDEX

SECTION 100 – GENERAL

101 PURPOSE

102 APPLICABILITY

SECTION 200 – DEFINITIONS

201 ACCEPTABLE TRACE VOC EMISSION

202 EMISSION CONTROL SYSTEM (ECS)

203 EXCEPTED CORROSIVE VOC

204 EXEMPT COMPOUNDS

205 FREEBOARD HEIGHT

206 FREEBOARD RATIO

207 PHOTORESIST OPERATION

208 SOLVENT

209 SOLVENT CLEANING STATION

210 STRIPPING

211 VOC CONTENT OF MATERIAL

SECTION 300 – STANDARDS

301 CONTROL OF PHOTORESIST OPERATIONS

302 USING SOLVENTS CONTAINING MORE THAN 10 PERCENT VOC

303 OPERATION AND MAINTENANCE (O&M) PLAN REQUIRED FOR ECS

304 OPERATE CORRECTLY

305 STORAGE AND DISPOSAL OF VOC

306 EXEMPTIONS

SECTION 400 – ADMINISTRATIVE REQUIREMENTS

401 COMPLIANCE SCHEDULE

402 CONTROL EFFICIENCY GENERALIZATION

403 APPLICABILITY OF RULE 331 FOR SUPPORT OPERATIONS

SECTION 500 – MONITORING AND RECORDS

501 MONITORING DEVICE RECORDS
502 RECORDKEEPING AND REPORTING
503 COMPLIANCE DETERMINATION
504 TEST METHODS

Adopted 11/16/92
Revised 06/19/96
Revised 04/21/99
Revised 09/25/13

MARICOPA COUNTY
AIR POLLUTION CONTROL REGULATIONS

REGULATION III – CONTROL OF AIR CONTAMINANTS

RULE 338
SEMICONDUCTOR MANUFACTURING

SECTION 100 – GENERAL

101 **PURPOSE:** To limit the emission of volatile organic compounds (VOC) from semiconductor manufacturing.

102 **APPLICABILITY:**

102.1 This rule applies to making any semiconductor device, including diodes, zeners, stacks, rectifiers, integrated microcircuits, transistors, solar cells, light-sensing devices, and light-emitting devices. This rule applies to all direct processing of the wafer/die from crystal growth and wafer production through oxidation, photoresist operations, etching, doping, epitaxial growth operations, circuit separation, encapsulation, and those assembly and test operations related to semiconductor manufacturing.

102.2 Rule 338 does not apply to an accredited school that has an educational program in which semiconductors are either fully or partially made. However, this rule is applicable to schools that sell such semiconductor constructions for other than teaching and/or research purpose(s).

SECTION 200 – DEFINITIONS: For the purpose of this rule, the following definitions shall apply, in addition to those definitions found in Rule 100 (General Provisions and Definitions) of these rules. In the event of any inconsistency between any of the Maricopa County air pollution control rules, the definitions in this rule take precedence.

201 **ACCEPTABLE TRACE VOC EMISSION:** Emission so dilute that less than 50 ppm or 220 mg/M3 registers on a VOC detector when its probe is 1 inch (2.5 cm) from the surface of a potential VOC-emitter. Such detector shall be used pursuant to subsection 503.5, using EPA Test Method 21.

202 **EMISSION CONTROL SYSTEM (ECS):** A system, approved in writing by the Control Officer, designed and operated in accordance with good engineering practice to reduce emissions of volatile organic compounds. Such system consists of an emissions collection subsystem and an emissions processing subsystem.

203 EXCEPTED CORROSIVE VOC: The following compounds emitted either from photoresist process(es) or from semiconductor cleaning processes: citric acid, acetic acid, methylsulfonic acid, and tetramethyl-ammonium hydroxide. Also included are the following categories of corrosive VOC emitted either from photoresist process(es) or from semiconductor cleaning processes: acidic VOC emitted by any organic acid having a pH of 2 or less in its most acidic aqueous state, and basic VOC emitted from a caustic organic solution having a pH of 12.5 or more in its most basic aqueous state.

204 EXEMPT COMPOUNDS: For the purpose of this rule, the non-VOC, non-aqueous evaporating portion of a formulation; this necessarily includes all non-precursor organic compounds in addition to inorganic liquids and gases.

205 FREEBOARD HEIGHT: The following measurement within the tank/basin of a cleaning machine, as determined during idling mode:

205.1 Batch:

a. Non-Vapor: The vertical distance from the most elevated solvent surface to the least elevated point of the top-rim when the cover is open or removed.

b. Vapor: The vertical distance from the least elevated point of the top-rim to the point halfway between the highest and the lowest point of the cooling coils.

205.2 In-line:

a. Non-vapor: The vertical distance from the lowest entry/exit point to the most elevated solvent surface.

b. Vapor: The vertical distance from the lowest entry/exit point, to the point halfway between the highest and the lowest point of the cooling coils.

206 FREEBOARD RATIO: The freeboard height divided by the smaller of the inside horizontal length or the inside horizontal width of the cleaning machine's evaporative surface area.

207 PHOTORESIST OPERATION: A process for the application and development of photoresist masking solution on a wafer, including preparation (except primary cleaning), soft bake, develop, hard bake, stripping, and edge-bead removal, and can be generally subdivided as follows:

207.1 Negative Photoresist Operation: A process where the maskant hardens when exposed to light or other process radiation, and the unhardened maskant is stripped, exposing the wafer surface for etching.

207.2 Positive Photoresist Operation: A process where the maskant softens when exposed to light or other process radiation, and the softened maskant is stripped, exposing the wafer surface for further processing.

208 SOLVENT: Any liquid or vapor which is used to dissolve, clean, strip, or remove impurities, coatings, contaminants, or films from surfaces or from internal spaces and voids. This includes, but is not limited to, developers and stripping agents.

209 SOLVENT CLEANING STATION: A workplace equipped to remove surface contaminants using a liquid or vapor solvent containing volatile organic compounds. This excludes photoresist stripping processes.

210 STRIPPING: The removal of spent photoresist maskant from the product after etching, or the removal of oxide or other stencil agent from the product after diffusion, or any other removal of applied masking agent.

211 VOC CONTENT OF MATERIAL: The weight of VOC per volume of material and can be calculated by:

$$\text{Grams of VOC per Liter of Material} = \frac{V_s - W_w - W_{es}}{V_m}$$

Where: V_s = weight of all volatile compounds in grams, including water, exempt compounds, and dissolved vapors

W_w = weight of water in grams

W_{es} = total weight of all exempt compounds in grams

V_m = volume of material in liters

SECTION 300 – STANDARDS

301 CONTROL OF PHOTORESIST OPERATIONS: An owner or operator conducting photoresist operations at a semiconductor manufacturing facility that annually emits more than 25 tons (22.7 Mg) of VOC from all photoresist operations combined, measured prior to any emissions control, shall reduce photoresist VOC-emissions or aggregated VOC-emissions from both photoresist and cleaning-station processes using an ECS that satisfies the requirements set forth in either subsection 301.1 or 301.2 of this rule:

301.1 Use an ECS to Control Photoresist VOC Only:

a. Achieve at least 80% overall VOC-control of photoresist VOC, including capture and processing of photoresist VOC, as determined by applicable provisions in Section 503; or

b. The ECS shall capture at least 90% of all photoresist VOC and achieve an hourly average stack concentration not exceeding 20 mg VOC/standard cubic meter, as determined by applicable provisions in

Section 503. Mass loading of VOC is expressed as milligrams of non-methane organic carbon.

301.2 Use an ECS to Control Aggregated Photoresist VOC and Cleaning VOC:

a. Achieve at least 80% overall VOC-control of aggregated cleaning plus photoresist VOC, including capture and processing, as determined by applicable provisions in Section 503; or

b. The ECS shall capture at least 90% of all cleaning and photoresist VOC emissions combined and achieve an hourly average stack concentration not exceeding 20 mg VOC/standard cubic meter, as determined by applicable provisions in Section 503. Mass loading of VOC is expressed as milligrams of non-methane organic carbon.

302 OPERATIONS USING SOLVENTS CONTAINING MORE THAN 10 PERCENT VOC:

302.1 Solvent Cleaning Stations: A person shall not operate a solvent cleaning station that cleans semi-conductor devices with solvents containing more than 10 percent VOC content unless each of the following requirements in subsections 302.1a through c are satisfied, or subsection 302.3 is satisfied.

a. Each heated or unheated reservoir, sink, and container that transfers, stores, or holds VOC-containing material shall be provided with a full cover. A cover shall remain closed except while production, sampling, maintenance, or loading or unloading procedures require operator access; and

b. All heated or unheated reservoirs and sinks holding VOC-containing materials with a total VOC vapor-pressure exceeding 33 mm Hg at 20°C (68°F) shall have a freeboard ratio greater than or equal to 1.0; and

c. Solvent flow of VOC-containing materials shall be applied in a continuous unbroken stream and in a manner which shall prevent liquid loss resulting from splashing.

302.2 Cleanup Solvents: A person shall not use a VOC-containing material for the purpose of cleaning semiconductor manufacturing equipment at a semiconductor manufacturing facility unless the requirements in at least one of the following subsections 302.2a through 302.2c are satisfied, or an ECS is used pursuant to subsection 302.3. This includes, but is not limited to, the cleaning of empty boats, quartz tubes, and other devices used to hold, contain, or process semiconductors.

a. The VOC content of the fluid does not exceed 200 grams per liter (1.7 pounds per gallon) of material; or

b. The VOC composite partial pressure does not exceed 33 mm Hg (0.64 psia) at a temperature of 20ºC (68ºF); or

c. The components being cleaned are totally enclosed during the washing, rinsing, and draining processes such that there are no greater than acceptable trace VOC emissions (ATVE) to the atmosphere during such processes. ATVE means that less than 50 ppm or 220 mg/m^3 VOC is detected when determined according to subsection 503.5.

302.3 Alternative Compliance for Solvent Processes: An owner or operator of an operation is allowed to meet any and all provisions under subsections 302.1 and 302.2 that apply to that operation by:

a. Using an ECS that achieves an overall control efficiency as required under Section 301 and that is operated pursuant to all applicable ECS requirements of this rule; or

b. Using an Air-tight or Airless system that both is sealed during cleaning and drying and has a sealed, self-contained liquid-solvent recovery system; or

c. Using only those materials in the operation that contain less than 100 g VOC/liter or no more than 10.0 percent VOC by weight.

303 OPERATION AND MAINTENANCE (O&M) PLAN REQUIREMENTS FOR ECS:

303.1 An owner or operator of a facility shall provide and maintain, readily available on-site at all times, (an) O&M Plan(s) for any ECS, any other emission processing equipment, and any ECS monitoring devices that are used pursuant to this rule or to an air pollution control permit.

303.2 The owner or operator of a facility shall submit to the Control Officer for approval the O&M Plans of each ECS and of each ECS monitoring device that is used pursuant to this rule.

303.3 The owner or operator of a facility shall comply with all the identified actions and schedules provided in each O&M Plan.

303.3 An owner or operator shall fully comply with each ECS O&M Plan that the owner or operator has submitted for approval, but which has not yet been approved, unless notified otherwise by the Control Officer in writing.

304 OPERATE CORRECTLY:

304.1 Process Equipment: All active process equipment in which VOC-containing materials are used shall be operated and maintained in proper working order.

304.2 **Leaks:** Liquids containing more than 0.2 percent VOC that leak at a rate of 3 drops per minute or more shall be repaired within 24 hours of detection, or the equipment shall be shut down until replaced or repaired according to the following schedule: Shut down prior to the next line shut down or within 24 hours of detection, whichever comes first.

304.3 **Monitoring Devices:** Provide, properly install and maintain in calibration, in good working order, and in operation, devices for indicating or recording temperatures, pressures, rates of flow, concentrations or other operating parameters required by the O&M Plan for determining if air pollution control equipment or other means of control are functioning properly.

305 STORAGE AND DISPOSAL OF VOC:

305.1 All storage of VOC-containing materials subject to evaporation, including the storage of waste solvent and waste solvent residues, shall at all times be in closed containers, except when contents are added or removed.

305.2 Containers shall be legibly labeled with their contents.

305.3 Disposal of waste or surplus VOC-containing materials shall be done in a manner that does not promote VOC evaporation, such as, but not limited to, via sewage treatment works or having the waste hauled off-site in sealed containers.

306 EXEMPTIONS:

306.1 **Quality Control and R&D Operations:** Except for this rule's Sections 304 and 305 and subsections 502.1 and 502.2, this rule shall not apply to those operations within a semiconductor manufacturing facility which are used exclusively for one or more of the following: chemical or physical analysis, determination of product quality or commercial acceptance, research, or pilot plant activities. Such operations may be exempted until the sum of daily emissions from all such exempted operations reaches but does not exceed 40 pounds (18.1 kg). This exemption shall not apply to a particular operation if the exemption is denied in writing by the Control Officer.

306.2 An aggregate of up to 55 gallons per year of material not exempted by other provisions within this Section 306 is exempt from the VOC-control requirements of Section 301 if usage is logged monthly in a coherent manner and cumulative usage is calculated.

306.3 **Low VOC Materials:** The following provisions apply to materials with a VOC content of 10% or less as received by a facility; VOC content shall be determined pursuant to Section 503. Percent is either by weight or volume, as chosen by the operator.

a. Materials with a VOC content of less than 2 grams VOC/liter or less than 0.2 percent VOC are exempt from Rule 338.

b. Materials with a VOC content of 0.2% to 10% VOC are exempt from Sections 301, 302, 303, 501, and 502 of this rule if the total quantity annually received is updated annually pursuant to subsection 502.2c, and disposal is done pursuant to all requirements within Section 305.

306.4 Excepted Corrosive VOC:

a. An excepted corrosive VOC is exempt from subsection 301.1 of this rule under the conditions in subsections (1) and (2) following:

(1) An owner or operator choosing the control option in subsection 301.1 is allowed to annually exempt an aggregated photoresist VOC total of up to 1 ton of excepted corrosive-VOC emissions from all control device and ECS requirements; and

(2) All excepted corrosive VOCs emitted in excess of the 1 ton (907.2 kg) per year aggregated allowance in 306.4a(1) are directed through a control device. No test of control efficiency shall be required for excepted corrosive organic compounds in a control device.

(3) All excepted corrosive VOCs emitted in excess of the 1 ton (907.2 kg) per year aggregated allowance in 306.4a(1) that are not directed through a control device are subject to Section 301 and subsection 301.1 as ordinary, non-exempt VOC.

b. An excepted corrosive VOC is exempt from subsection 301.2 of this rule under the conditions in subsections (1) and (2) following:

(1) An owner or operator choosing the control option in subsection 301.2 is allowed to annually exempt from all control device and ECS requirements 1 ton of excepted corrosive-VOC emissions aggregated from photoresist plus semiconductor cleaning; and

(2) All excepted corrosive VOCs emitted in excess of the 1 ton (907.2 kg) per year aggregated allowance in 306.4b(1) are directed through a control device. No test of control efficiency shall be required for excepted corrosive organic compounds in a control device.

(3) All excepted corrosive VOCs emitted in excess of the 1 ton (907.2 kg) per year aggregated allowance in 306.4b(1) that are not directed through a control device are subject to subsection 301.2 as ordinary, non-exempt VOC.

306.5 Organic Silicon Compounds: VOC emissions up to an aggregated annual total of 1 ton of organic silanes and silicates, and any other organic compound of carbon and silicon, may be excluded by an owner or operator from being subject to the ECS control requirements of Section 301 if information from the manufacturer of the ECS indicates that such

compounds adversely affect the operation of the model or type of ECS being used.

306.6 Wipe Cleaning: Wipe cleaning is not subject to Section 300, but the usage of VOC-containing solvent for wipe cleaning is subject to the recordkeeping provisions of Section 500.

SECTION 400 – ADMINISTRATIVE REQUIREMENTS

401 COMPLIANCE SCHEDULE:

401.1 Effective Date: This revised version of Rule 338 becomes effective on June 1, 1999.

401.2 ECS Schedule: Any owner or operator of a facility first becoming subject to the ECS requirements of Section 301 or Section 302 and intending to install and commence to use an ECS to comply with Section 301 or Section 302, shall submit for the Control Officer's approval an emission control plan describing the ECS by the first day of the 4th month after the month in which such facility becomes subject to the ECS requirement. The plan shall show how the ECS is to be used to achieve full compliance. The plan shall specify dates for completing increments of progress, such as the contractual arrival date of new control equipment. The Control Officer may require a person submitting such emission control plan to submit subsequent reports on progress in achieving compliance. Any and all ECS used to achieve such compliance shall be in operation by 15 months after the facility becomes subject to the ECS requirement.

402 CONTROL EFFICIENCY GENERALIZATION: An owner or operator is allowed the following option:

402.1 You may calculate the processing efficiency of an ECS processing subsystem, operated pursuant to subsection 301.1a, that also optionally controls other VOC in addition to photoresist VOC, by assuming the same percentage efficiency as was calculated from testing the efficiency of controlling all input VOC. For example, if the capture/collection subsystem blends 150 lbs per hour of photoresist VOC with 50 lbs per hour of etchant VOC, and if the processor simultaneously reduces the 150 lbs of photoresist VOC to 15 pounds of VOC and 50 pounds of etching VOC to 3 lbs of VOC, the processor will be credited with reducing the photoresist VOC by $91\% = 100\% \text{ x} \left[1 - \left(\frac{15+3}{150+50}\right)\right]$; not 90%.

402.2 In calculating the processing efficiency of an ECS processing subsystem operated pursuant to subsection 301.2a for an ECS that controls, in addition to cleaning and photoresist VOC, other VOC not addressed by subsection 301.2, it may be assumed that the ECS' efficiency for processing the

aggregate of cleaning plus photoresist VOC is the same as that calculated from testing the efficiency of controlling all input VOC.

403 APPLICABILITY OF RULE 331 FOR SUPPORT OPERATIONS: The solvent-cleaning of equipment or parts that is performed for purposes other than semiconductor manufacturing shall be subject to the solvent cleaning Rule 331 of these Air Pollution Control Rules and Regulations.

SECTION 500 – MONITORING AND RECORDS

501 MONITORING DEVICE RECORDS: Keep and maintain monitoring records as required by the O&M plan.

502 RECORDKEEPING AND REPORTING: Any person subject to this rule shall comply with the following requirements. Records shall be retained for five years and shall be made available to the Control Officer upon request.

502.1 Current List: Maintain a current list of materials used in the manufacture of semiconductors: coatings, adhesives, maskants, solvents, cleaning solutions, and any other VOC-containing materials. State the material VOC content of each in pounds per gallon, grams per liter, or as a weight percent (percent by mass) of the material.

502.2 Usage Records:

a. Maintain monthly records showing the type and amount of all VOC-containing material used in semiconductor operations, except as modified by subsections b and c following. This includes, but is not limited to, strippers, maskants, solvent materials and cleanup materials.

b. Grouping by VOC Content: For purposes of recording usage, those maskants, strippers, coatings, solvents or other VOC-containing materials that are of similar type and similar VOC content may be given a group name and recorded under that name. To the group name shall be assigned the highest VOC content among the members of that group, rounded to the nearest 10th of a pound per gallon, the nearest 1 g/L, or the nearest 1 percent. For each grouping, the name of each material in the group and its material VOC content must appear, along with the name of the grouping and its material VOC content.

c. Update annually the usage of materials having a VOC content of 10.0% or less. The results of an applicable test method, referred to in Section 504, or data supplied by the material's manufacturer suffices to demonstrate VOC content of material for this purpose. If there is a discrepancy between the manufacturer's formulation data and the results of an applicable test method, compliance shall be based on the results from the test method analysis.

502.3 Records of Disposal:

a. The Control Officer may account as VOC emissions to the atmosphere such VOC as is not accounted for by an adequate demonstration of VOC recordkeeping.

b. Emission factors acceptable to the Control Officer are allowed to be used in calculating VOC emissions.

502.4 ECS Recordkeeping:

a. Make a continuous record of the times an ECS is used to comply with this rule.

b. Maintain records of the O&M Plan's key system operating parameters with the frequency required by the Plan.

c. Maintain records of all maintenance performed according to the O&M Plan.

d. An explanation shall be entered for scheduled maintenance that is not performed during the period designated in the O&M Plan.

503 COMPLIANCE DETERMINATION: When more than one test method is permitted for a determination, an exceedance of the limits established in this rule determined by any of the applicable test methods constitutes a violation of this rule.

503.1 Sample Analysis: The following test methods shall be used for determining VOC content. For routine information collection, the Control Officer may accept a manufacturer's data sheet (MSDS), data certified by an officer of the supplying company, or test data for the product model of inquiry.

a. VOC content of materials having more than 10% solids by volume shall be determined using the applicable EPA Reference Method 24 or 24A (40 CFR, Part 60, Appendix A).

b. The VOC content of solutions, dispersions, and emulsions that have no solids or less than 5% solids shall be determined by Method 31 of California's Bay Area Air Quality Management District (BAAQMD), or by California's South Coast Air Quality Management District Method (SCAQMD) 313-9.

c. Solids-free solutions, in which all organic components are VOCs, may be tested using Maricopa County Reference Method #100, "Total Organic Carbon for Windshield Washer Fluids", Maricopa County Air Pollution Control Rule 344 (April 7, 1999).

d. The VOC content of materials believed to have between 5 and 10% solids shall be determined by EPA Method 24, by BAAQMD Method 31, or by the SCAQMD Method 313-9.

503.2 Emission Testing: An ECS used pursuant to Section 301 and/or Section 302 shall be tested using EPA Reference Test Methods 18 or 25, or an applicable submethod of such Test Methods. VOC emission shall be measured and calculated as carbon.

503.3 Capture Efficiency: Capture efficiency of an emission control device used to meet the requirements of Section 301 or Section 302 shall be determined by mass balance in combination with ventilation/draft rate determinations done in accordance with subsection 503.4, or US EPA Test Methods 204, 204a, 204b, 204c, 204d, 204e, and 204f, Appendix M, 40 CFR 51. Verification that all active hoods and ducts, when measured at any selection of any interior place within them, are at negative pressure relative to adjacent, uncaptured air shall suffice for routine and uncontested demonstration of capture adequacy.

503.4 Ventilation/Draft Rates: Ventilation/draft rates shall be determined by EPA Methods 2, 2A, 2C, or 2D.

503.5 Determination of acceptable trace VOC-emission, with reference to subsection 302.2c, shall use a methane calibration standard. The detection instrument shall meet the requirements of EPA Test Method 21 (40 CFR 60). Use of the detection instrument shall generally meet the probe movement speed and probe orientation specifications of Method 21 for the exterior of piping, valves, tubing, connectors, and containers. Means other than described in Method 21 may be used for detector handling and positioning immediately above open liquids and within containers, ducts, and piping. A valid instrument reading under 50 ppm or 220 mg/M3 using a probe positioned closer than 1 inch also demonstrates acceptable trace VOC emission.

503.6 Formula for Total VOC Vapor-Pressure: Equivalent to: **VOC Composite Partial**
Pressure, with reference to Sections 301 and 302.

$$PP_c = \frac{\sum_{i=1}^{n} (W_i)(VP_i)/MW_i}{\frac{W_w}{18} + \sum_{i=1}^{m} \frac{W_{ej}}{MW_{ej}} + \sum_{i=1}^{n} \frac{W_i}{MW_i}}$$

W_i = Weight of the "i"th VOC compound in grams

W_w = Weight of water in grams

W_{ej} = Weight of the "j"th exempt evaporating compound in grams

MW_i = Molecular weight of the "i"th VOC compound in grams per gram mole, e.g., one gram-mole of isopropyl alcohol weighs 60 grams

MW_{ej} = Molecular weight of the "j"th exempt evaporating compound, e.g., 1 gram-mole of acetone weighs 58 grams; 1 g-mole HCl =36.5 g

PP_c = VOC composite partial pressure at 20°C in mm mercury (Hg)

VP_i = Vapor pressure of the "i"th VOC compound at 20°C in mm Hg

18 = Weight of one gram-mole of water

n = Total number of different (dissolved) VOCs

m = Total number of different (dissolved) exempt compounds

504 TEST METHODS: The EPA test methods as they exist in the Code of Federal Regulations (CFR) (July 1, 1998), as listed below, are adopted by reference. The other test methods listed here are also adopted by reference, each having paired with it a specific date that identifies the particular version/revision of the method that is adopted by reference. These adoptions by reference include no future editions or amendments. Copies of test methods referenced in this Section 504 are available at the Maricopa County Air Quality Department, 1001 N. Central Ave., Phoenix, AZ, 85004.

504.1 EPA Test Methods:

a. EPA Methods 2 ("Determination of Stack Gas Velocity and Volumetric Flow Rate"), 2a ("Direct Measurement of Gas Volume Through Pipes and Small Ducts"), 2c ("Determination of Stack Gas Velocity and Volumetric Flow rate in Small Stacks or Ducts"), and 2d ("Measurement of Gas volumetric Flow Rates in Small Pipes and Ducts"). All 4 of the foregoing methods are in 40 CFR 60, Appendix A.

b. EPA Method 18 ("Measurement of Gaseous Organic Compound Emissions by Gas Chromatography") and its submethods (40 CFR 60, Appendix A).

c. EPA Test Method 21 ("Determination of Volatile Organic Compounds Leaks") (40 CFR 60, Appendix A).

d. EPA Test Method 24 ("Determination of Volatile Matter Content, Water Content, Density, Volume Solids, and Weight Solids of Surface Coatings") (40 CFR 60, Appendix A).

e. EPA Method 25 ("Determination of Total Gaseous Non-methane Organic Emissions as Carbon") and its submethods (40 CFR 60, Appendix A).

f. EPA Test Method 204 ("Criteria for and Verification of a Permanent or Temporary Total Enclosure"), and related Methods 204a, 204b, 204c, 204d, 204e, and 204f (Appendix M, 40 CFR 51).

504.2 Other (Non-EPA) Test Methods:

a. California's Bay Area Air Quality Management District (BAAQMD) Method 31 (April 15, 1992), "Determination of Volatile Organic Compounds in Paint Strippers, Solvent Cleaners, and Low Solids Coatings".

b. California's South Coast Air Quality Management District (SCAQMD) Method 313-91 (April, 1997).

REGULATION III – CONTROL OF AIR CONTAMINANTS

RULE 339
VEGETABLE OIL EXTRACTION PROCESSES
INDEX

SECTION 100 – GENERAL

101 PURPOSE

102 APPLICABILITY

SECTION 200 – DEFINITIONS

201 APPROVED EMISSION CONTROL SYSTEM

202 CONVEYOR

203 COOLER

204 DESOLVENTIZER-TOASTER (D-T)

205 EQUIPMENT IN SOLVENT SERVICE

206 EXTRACTOR

207 LEAK

208 MEAL

209 MINERAL-OIL SCRUBBER

210 SOLVENT

211 SOLVENT EXTRACTION

212 VEGETABLE OIL PLANT

SECTION 300 – STANDARDS

301 LIMITATION-VOC EMISSIONS

302 EXTRACTORS AND DESOLVENTIZER-TOASTERS

303 DESOLVENTIZER-TOASTER CONVEYOR

304 OPERATION AND MAINTENANCE PLAN

305 EQUIPMENT IN SOLVENT SERVICE

306 EXEMPTIONS

SECTION 400 – ADMINISTRATIVE REQUIREMENTS

401 COMPLIANCE SCHEDULE

SECTION 500 – MONITORING AND RECORDS

501 PROVIDING AND MAINTAINING MONITORING DEVICES

502 RECORDKEEPING AND REPORTING

503 RECORDS RETENTION

504 COMPLIANCE DETERMINATION-TEST METHODS

Adopted 11/16/92
Revised 09/25/13

MARICOPA COUNTY
AIR POLLUTION CONTROL REGULATIONS

REGULATION III – CONTROL OF AIR CONTAMINANTS

RULE 339
VEGETABLE OIL EXTRACTION PROCESSES

SECTION 100 – GENERAL

101 **PURPOSE:** To limit the emissions of volatile organic compounds (VOCs) from the extraction of vegetable oil using solvents.

102 **APPLICABILITY:** This rule applies to any vegetable oil extraction facility which has emitted 600 pounds (272 kg) or more of VOC in a day or 100 tons (90.7 Mg) or more of VOC in a year, or which would emit at such levels in the absence of existing VOC control measures, or reasonably could be expected to emit at such levels at current or proposed production rates.

SECTION 200 – DEFINITIONS: For the purpose of this rule, the following definitions shall apply, in addition to those definitions found in Rule 100 (General Provisions and Definitions) of these rules. In the event of any inconsistency between any of the Maricopa County air pollution control rules, the definitions in this rule take precedence.

201 **APPROVED EMISSION CONTROL SYSTEM:** A system for reducing emissions of organic compounds, consisting of both collection and control devices which are approved in writing by the Control Officer and are designed and operated in accordance with good engineering practice.

202 **CONVEYOR:** Any device which moves material from one location to another location.

203 **COOLER:** A device which reduces the temperature and/or moisture from meal being processed.

204 **DESOLVENTIZER-TOASTER (D-T):** A heated process unit in which air and/or steam are applied to solvated vegetable matter to volatilize the extraction solvent.

205 **EQUIPMENT IN SOLVENT SERVICE:** Any pump, valve, pressure relief valve, sight glass, sample connection, open-ended valve, connector, or other component which handles extraction solvent or material containing such solvent.

206 **EXTRACTOR:** Equipment which removes vegetable oil from vegetable material through the use of solvent.

207 **LEAK:** Any dripping or indication of dripping of liquid from equipment in solvent service, or an emission of gaseous VOC which exceeds 10,000 ppm (expressed as methane) above background when measurements are made using EPA Method 21.

208 **MEAL:** Pulverized vegetable matter from which oil has been extracted and which might still contain some extraction solvent.

209 **MINERAL-OIL SCRUBBER:** A packed tower which uses mineral oil as a sorbent for the extraction solvent.

210 **SOLVENT:** The extraction medium used to extract oil from seeds, beans or other vegetable matter.

211 **SOLVENT EXTRACTION:** Removal of vegetable oil from vegetable matter using a liquid solvent in a contact system to dissolve and suspend the oil.

212 **VEGETABLE OIL PLANT:** Any facility or section of a facility engaged in the extraction or refining of vegetable oil through the use of solvent.

SECTION 300 – STANDARDS

301 **LIMITATION – VOC EMISSIONS:** No person shall operate a vegetable oil extraction plant or facility unless the emissions do not exceed either of the following:

301.1 2.5 pounds of VOC per ton of processed seed (1.13 kg/Mg) for any 30 consecutive days of operation; and

301.2 3.0 pounds of VOC per ton of processed seed (1.36 kg/Mg) for any seven consecutive days of operation.

302 **EXTRACTORS AND DESOLVENTIZER-TOASTERS:** No person shall operate any extractor or desolventizer-toaster unless VOC emissions are controlled by both a condenser and a mineral-oil scrubber. Such scrubber shall have an overall VOC-control efficiency (capture with processing) of at least 90 percent by weight.

303 **DESOLVENTIZER-TOASTER CONVEYOR:** No person shall operate a vegetable oil plant unless the desolventizer-toaster discharge conveyor is vented to a mineral oil scrubber having an overall VOC-control efficiency (capture with processing) of at least 90 percent by weight.

304 **OPERATION AND MAINTENANCE PLAN:** Owners or operators shall provide the Control Officer with an Operation and Maintenance (O&M) Plan. This Plan shall specify key system operating parameters, such as temperatures, pressures and/or flow rates, necessary to determine compliance with this rule and describe in detail procedures to maintain the Approved Emission Control System. The Control Officer's written approval of this plan shall be required for compliance with this rule to be achieved.

305 EQUIPMENT IN SOLVENT SERVICE: The owner or operator of a vegetable oil extraction plant shall inspect at least once a month all equipment in solvent service for any indication of VOC leakage in accordance with EPA Method 21. If the detected gaseous leakage level exceeds 10,000 ppm (expressed as methane) or if leak(s) are visible, the leak shall be tagged with a weatherproof tag. The date and time of the leak's discovery shall be recorded in a permanent logbook. The operator shall attempt to repair such leak(s) as soon as possible. The operator shall notify the Control Officer by the Division's next working day of leak(s) which cannot be fixed within 24 hours of discovery. No leak shall remain unrepaired by the end of any plant shutdown.

306 EXEMPTIONS: In determining compliance with subsection 301.2 of this rule, the Division shall exclude from calculations a startup day and the VOC added on that day, subsequent to purging the extractor and/or the refinery of all solvent.

SECTION 400 – ADMINISTRATIVE REQUIREMENTS

401 COMPLIANCE SCHEDULE: By February 14, 1993, any person subject to Section 301, 302, or 303, who does not comply with all provisions of said section(s) shall submit to the Control Officer for approval an emission control plan describing the method to be used to achieve full compliance by November 15, 1993. The plan shall specify dates for completing increments of progress, such as the contractual arrival date of new control equipment. The Control Officer may require a person submitting such emission control plan to submit subsequent reports on progress in achieving compliance.

SECTION 500 – MONITORING AND RECORDS

501 PROVIDING AND MAINTAINING MONITORING DEVICES: Any person sorbing or otherwise processing VOC emissions to reduce them pursuant to this rule, shall provide, properly install and maintain in calibration, in good working order and in operation, devices described in an approved O&M Plan for indicating temperatures, pressures, rates of flow, or other operating conditions necessary to determine if air pollution control equipment is functioning properly and is properly maintained.

502 RECORDKEEPING AND REPORTING: Any person subject to this rule shall comply with the following requirements. Any records and lists required by this section shall be kept in a consistent and complete manner.

502.1 Material Usage: Maintain a current list of solvents, mineral oil and any other VOC-containing materials such as paints and cleaning liquids which annually exceed 20 gallons and state the VOC content of each in pounds per gallon or grams per liter. Daily record the amount of makeup solvent, the tons of vegetable matter subject to extraction, the amount of vegetable oil produced, and amount of mineral oil added.

502.2 **Operation and Maintenance:** Maintain a record of the times an Approved Emission Control Device is used to comply with this rule. Maintain daily records of the O&M Plan's key system operating-parameters. Maintain records of all maintenance performed according to the O&M Plan.

502.3 **Calculations:** By the end of each day-shift, calculate both the seven-day and the thirty-day rolling averages yielding daily VOC-consumption figures, using data gathered up to and including the previous shift.

502.4 **Logbook:** A permanent logbook shall be kept of dates, times, and locations of all: leak-detection activities, leaks found, leaks repaired, shutdowns and startups. During operating hours the logbook, as well as entries required under the preceding subsections 502.1, 502.2 and 502.3, shall immediately be made available to the Control Officer upon request.

503 **RECORDS RETENTION:** Copies of reports and supporting documentation required by the Control Officer shall be retained at least three years after the date of submittal. Records and information required by this rule shall be retained for at least three years.

504 **COMPLIANCE DETERMINATION – TEST METHODS:** An exceedance of the limits established in the rule determined by any of the applicable test methods constitutes a violation of this rule.

504.1 Control efficiency of an emissions control device shall be determined according to EPA Reference Method 25 or its applicable submethods, Title 40, CFR Part 60, Appendix A.

504.2 Gaseous leaks shall be tested for using EPA Method 21.

REGULATION III – CONTROL OF AIR CONTAMINANTS

RULE 340
CUTBACK AND EMULSIFIED ASPHALT

INDEX

SECTION 100 – GENERAL

101 PURPOSE

102 APPLICABILITY

SECTION 200 – DEFINITIONS

201 ASPHALT CEMENT

202 ASPHALT RUBBER

203 BITUMEN

204 CUTBACK ASPHALT

205 CUTBACK TAR

206 DUST PALLIATIVE

207 EMULSIFIED ASPHALT/EMULSIFIED TAR

208 MEDIUM CURE CUTBACK ASPHALT

209 PENETRATING PRIME COAT

210 RAPID CURE CUTBACK ASPHALT

211 SOLVENT-VOC

212 TACK COAT

213 TAR

SECTION 300 – STANDARDS

301 LIMITATIONS

302 EXEMPTIONS

303 LABELING REQUIREMENT

SECTION 400 – ADMINISTRATIVE REQUIREMENTS (NOT APPLICABLE)

SECTION 500 – MONITORING AND RECORDS

501 RECORDKEEPING AND REPORTING

502 COMPLIANCE DETERMINATION - TEST METHODS

Revised 07/13/88
Revised 06/22/92
Revised 09/21/92
Revised 09/25/13

MARICOPA COUNTY
AIR POLLUTION CONTROL REGULATIONS

REGULATION III – CONTROL OF AIR CONTAMINANTS

RULE 340
CUTBACK AND EMULSIFIED ASPHALT

SECTION 100 – GENERAL

101 **PURPOSE:** To limit emissions of volatile organic compounds (VOCs) from the use of cutback and emulsified asphalt and other bitumens.

102 **APPLICABILITY:** The provisions of this rule apply to the use and application of cutback and emulsified asphalt or tar materials for the paving, construction or maintenance of highways, streets, roads, parking lots, and driveways, and to the application of such materials onto soil and earthworks.

SECTION 200 – DEFINITIONS: For the purpose of this rule, the following definitions shall apply, in addition to those definitions found in Rule 100 (General Provisions and Definitions) of these rules. In the event of any inconsistency between any of the Maricopa County air pollution control rules, the definitions in this rule take precedence.

201 **ASPHALT CEMENT:** The dark brown to black cementitious material (solid, semisolid, or liquid in consistency), of which the main constituents are naturally occurring bitumens or bitumens resulting from petroleum refining.

202 **ASPHALT RUBBER:** An asphaltic binder made with asphalt cement and at least three percent of ground tire rubber by weight.

203 **BITUMEN:** A class of black or dark-colored (solid, semi-solid or viscous) cementitious substances, natural or manufactured, composed principally of high molecular weight hydrocarbons, of which asphalts, tars, pitches and asphaltites are typical.

204 **CUTBACK ASPHALT:** An asphalt cement liquified with any solvent-VOC.

205 **CUTBACK TAR:** A tar liquified with any solvent-VOC.

206 **DUST PALLIATIVE:** A light application of cutback or emulsified asphalt for controlling loose dust.

207 **EMULSIFIED ASPHALT/EMULSIFIED TAR:** Any liquified asphalt or tar produced by dispersing asphalt cement or tar into water by means of high speed agitation and an emulsifying agent.

208 **MEDIUM CURE CUTBACK ASPHALT:** A cutback asphalt which meets ASTM specification D 2027.

209 **PENETRATING PRIME COAT:** The low viscosity liquid asphalt or tar applied to a relatively absorbent surface to prepare it for new superimposed construction. Prime coats do not include dust palliatives or tack coats.

210 **RAPID CURE CUTBACK ASPHALT:** A cutback asphalt which falls generally within the specifications of ASTM designation D 2028-76 and which generally cures more quickly than medium cure cutback asphalt.

211 **SOLVENT-VOC:** For the purposes of this rule, any volatile organic compound which is used with an asphalt or tar to give fluidity and other desired properties and which volatilizes at 500°F (260°C) or less.

212 **TACK COAT:** An application of liquified asphalt to an existing, relatively non-absorbent surface to provide a thorough bond between that surface and the superimposed layer.

213 **TAR:** For the purposes of this rule, any non-asphalt bitumen. This includes road tar produced by distilling coal tar or blending coal-tar pitch with lighter coal-tar fractions.

SECTION 300 – STANDARDS

301 **LIMITATIONS:** No person shall sell, offer for sale, use or apply the following materials for paving, construction, or maintenance of highways, streets, driveways, parking lots or for any other use to which this rule applies:

301.1 Rapid cure cutback asphalt.

301.2 Any cutback asphalt material, road oils, or tar which contains more than 0.5 percent by volume VOCs which evaporate at 500°F (260°C) or less using ASTM Test Method D 402-76.

301.3 Any emulsified asphalt or emulsified tar containing more than 3.0 percent by volume VOCs which evaporate at 500°F (260°C) or less as determined by ASTM Method D 244-89.

302 **EXEMPTIONS:** The provisions of this rule shall not apply to:

302.1 Asphalt that is used solely as a penetrating prime coat and which is not a rapid cure cutback asphalt. Penetrating prime coats do not include dust palliatives or tack coats.

302.2 Any asphalt/bituminous material sold in Maricopa County for shipment and use outside Maricopa County if the person claiming such exemption clearly labels each container of materials entitled to such exemption or upon request (during normal business hours) immediately provides the Control Officer with shipping records demonstrating the asphalt material is not for use within Maricopa County.

302.3 A person may use up to 3.0 percent solvent-VOC by volume for batches of asphalt rubber which cannot meet paving specifications by adding heat alone only if request is made to the Control Officer, who shall evaluate such requests on a case-by-case basis. The Control Officer shall not approve such requests unless complete records are kept and full information is supplied including savings realized by using discarded tires. The Control Officer shall not approve such requests when it would cause a person to exceed 1100 lbs (500 kg) usage of solvent-VOC in asphalt rubber in a calendar year unless the applicant can demonstrate that in the previous 12 months no solvent-VOC has been added to at least 95 percent by weight of all the asphalt rubber binder made by the person or caused to be made for the person. This subsection (302.3) does not apply to batches which yield 0.5 percent or less solvent-VOC evaporated using the test in subsection 502.1.

303 **LABELING REQUIREMENT:** On or after December 22, 1992, no person shall sell, offer for sale, manufacture or store for sale or for use within Maricopa County any emulsified or cutback asphalt product which contains more than 0.5 percent by volume solvent-VOC unless such material lot includes a designation of solvent-VOC content on data sheet(s) expressed in percent solvent-VOC by volume.

SECTION 400 – ADMINISTRATIVE REQUIREMENTS (NOT APPLICABLE)

SECTION 500 – MONITORING AND RECORDS

501 **RECORDKEEPING AND REPORTING:** The owner or operator of any facility subject to this rule which manufactures, mixes, stores, ships, uses or applies any asphaltic/bituminous material containing more than 0.5 percent by volume solvent-VOC shall keep daily records of the amount and type received, used and shipped, as well as the solvent-VOC content of this material. Safety data (MSDS) or technical data sheets shall be kept available. These records must be maintained in a readily accessible location for a minimum of three years and must be made available to the Control Officer upon verbal or written request.

502 **COMPLIANCE DETERMINATION – TEST METHODS:**

502.1 Solvent-VOC content of non-emulsified asphalts and tars shall be determined by American Society for Testing and Materials (ASTM) Method D 402-76. For the purposes of this rule, the end point of the distillation shall be at 500°F (260°C).

502.2 Solvent-VOC content of emulsified asphalts and tars shall be determined using ASTM Method D 244-89. The end point of the distillation shall be at 500°F (260°C).

502.3 Measurement of exempt compound content in cutback and emulsified asphalts shall be conducted and reported in accordance with ASTM Test Method D 4457-85.

502.4 Tests to assist in determining the solvent-VOC content of the asphaltic binder of an asphaltic concrete are: ASTM Method D 2172 "Test for Quantitative Extraction of Bitumen from Bituminous Paving Mixtures" and ASTM Method D 1856 "Test for Recovery of Asphalt from Solution by Abson Method."

REGULATION III – CONTROL OF AIR CONTAMINANTS

RULE 341
METAL INVESTMENT CASTING

INDEX

SECTION 100 – GENERAL

101 PURPOSE

102 APPLICABILITY

SECTION 200 – DEFINITIONS

201 BINDER

202 BINDER VOC CONTENT

203 BINDER-VOC EMISSIONS

204 BURNOUT

205 BURNOUT CYCLE

206 DAY

207 EMISSION CONTROL SYSTEM (ECS)

208 INVESTMENT CASTING

209 KILN

SECTION 300 – STANDARDS

301 CONTROLS REQUIRED

302 MAINTENANCE

303 STORAGE AND DISPOSAL OF VOC

304 REQUIREMENTS FOR AIR POLLUTION CONTROL EQUIPMENT

SECTION 400 – ADMINISTRATIVE REQUIREMENTS (NOT APPLICABLE)

SECTION 500 – MONITORING AND RECORDS

501 ECS USE

502 RECORDKEEPING AND REPORTING

503 COMPLIANCE DETERMINATION-TEST METHODS

504 AVERAGING

08/02/93
Revised 08/05/94
Revised 12/16/98
Revised 09/25/13

MARICOPA COUNTY
AIR POLLUTION CONTROL REGULATIONS

REGULATION III – CONTROL OF AIR CONTAMINANTS

RULE 341
METAL INVESTMENT CASTING

SECTION 100 – GENERAL

101 **PURPOSE:** To limit the amount of volatile organic compounds (VOCs) emitted by metal investment casting facilities.

102 **APPLICABILITY:** This rule applies to any metal investment casting facility.

SECTION 200 – DEFINITIONS: For the purpose of this rule, the following definitions shall apply, in addition to those definitions found in Rule 100 (General Provisions and Definitions) of these rules. In the event of any inconsistency between any of the Maricopa County air pollution control rules, the definitions in this rule take precedence.

201 **BINDER:** Any material which is used to bind casting sand or other refractory particles into a cohesive mold or part of a mold.

202 **BINDER VOC CONTENT:**

$$\text{VOC Content of a Binder} = \frac{W_s - W_w - W_{es}}{V_m - V_w - V_{es}}$$

Using consistently either English or metric measures in the calculations
Where:

W_s = weight of all volatile material in the binder, in pounds (or grams), including VOC, water, non-precursor organic compounds and dissolved vapors.
W_w = weight of water in pounds (or grams)
W_{es} = weight of all non-precursor compounds in pounds (or grams)
V_m = volume of total binder material including suspended binder-solids, in gallons (or liters)
V_w = volume of water in gallons (or liters)
V_{es} = volume of all non-precursor compounds in gallons (or liters)

203 **BINDER-VOC EMISSIONS:** VOC emissions from binder operations which include, but are not limited to, VOC that is emitted during binder formulation and mixing at the casting facility, binder setting, cold-box gassing, metal pouring, mold

burnout, mold cooling, mold storage, and binder/sand recycling. This also includes VOC released through thermal vaporization, combustion, and pyrolysis of binder material.

204 **BURNOUT:** Firing a mold in a kiln to burn out any remaining fusible-model material and to cure the mold.

205 **BURNOUT CYCLE:** One of the following:

205.1 **Into Heated Kiln:** The period between introducing the first mold of a batch of molds into an actively heated kiln until the withdrawal of the last mold of the batch or until the time the cooling kiln reaches 199°F, whichever happens first.

205.2 **Into Cool Kiln:** For a batch of molds introduced into a cool kiln, the period from the time the kiln reaches 200° F until either the time the last mold of that batch is withdrawn or the time the cooling kiln reaches 199°F, whichever happens first.

206 **DAY:** A period of 24 consecutive hours beginning at midnight.

207 **EMISSION CONTROL SYSTEM (ECS):** A system, approved in writing by the Control Officer, designed and operated in accordance with good engineering practice to reduce emissions of volatile organic compounds. Such system consists of an emissions collection subsystem and an emissions processing subsystem.

208 **INVESTMENT CASTING:** A type of metal casting in which a mold is built up around a fusible model (typically wax), using refractory particles and binder. The model is then melted out and the mold is cured, usually at high temperatures, before casting metal is introduced into the mold.

209 **KILN:** The oven, retort, or furnace in which molds are fired or cured prior to their receiving molten metal.

SECTION 300 – STANDARDS

301 **CONTROLS REQUIRED:** After December 16, 1998, no person shall operate a metal investment casting facility emitting, prior to any control device, more than 150 lbs (68 kg) of VOC per day or more than 25 tons (22.7 mg) of VOC per year from investment casting operations unless VOC emissions are controlled by applicable methods in subsections 301.1 and 301.2. VOC emissions from testing, processing, and cleaning procedures that are part of the manufacturing of investment-cast products are included in calculating total emissions.

301.1 **VOC Emission from Binders Prior to Burnout**:

a. Use an Emission Control System which, through the capture and processing of emissions, reduces the total, facility-wide binder-VOC

emissions, prior to mold burnout whenever there are pre-burnout binder-VOC emissions, by using one of the following measures:

(1) Reduce VOC emissions by at least 85 percent as determined by the test methods referred to in Section 503 of this rule; or

(2) Use a capture subsystem with an overall capture efficiency of at least 90%, and a processing subsystem that emits no more than 20 mg VOC as organic carbon per standard cubic meter, corrected to 7.0% oxygen for oxidizing systems in accordance with the instructions in subsection 503.5; or

b. Maintain a limit to binder VOC content of 420 grams VOC per liter (3.5 lb/gal) of binder, less water and non-precursor organic compounds, as determined by methods referred to in Section 503 of this rule; or

c. Maintain a daily-weighted average not exceeding 420 grams VOC per liter (3.5 lb/gal) of binder, less water and non-precursor organic compounds, using calculations specified in Section 504 of this Rule 341.

301.2 Burnout VOC-Emissions: VOC emissions from a burnout operation in a kiln shall be controlled by a VOC control system or device that meets all the provisions of either subsection 301.2a or subsection 301.2b, as applicable.

a. Kilns Installed Prior to July 3, 1998: An owner or operator of a VOC control device serving a kiln for which installation was begun before July 3, 1998, shall:

(1) Operate the device so as to process VOC emissions either:

(a) With a reduction-efficiency of at least 90% as determined by the test methods referred to in Section 503, or

(b) Process the emissions sufficiently that the average emission during each burnout cycle is less than 30 milligrams of VOC (measured as organic carbon) per standard cubic meter of emissions (as determined by the test methods referred to in Section 503). Results shall be corrected to 7.0% oxygen for oxidizing systems in accordance with the instructions in subsection 503.5.

(2) During burnout, follow the O&M Plan procedures for proper positioning of the kiln access door, if open, and consistently comply with any other key operating parameters in the Plan.

b. Kilns Installed on or after July 3, 1998: An owner or operator of a kiln of which installation was begun on or after July 3, 1998, shall:

(1) Operate the device so as to process VOC emissions either:

(a) With an efficiency of at least 90% as determined by the test methods referred to in Section 503, or

(b) Process emissions such that the average emission during each burnout cycle is less than 20 milligrams of VOC (measured as organic carbon) per standard cubic meter of emissions (as determined by the test methods referred to in Section 503). Results shall be corrected to 7.0% oxygen for oxidizing systems in accordance with the instructions in subsection 503.5.

(2) Provide that the kiln has systems/devices sufficiently effective and of such a design that the door of the kiln does not need to be opened to regulate emissions during the burnout period.

(3) The kiln door shall be kept closed after the last unfired mold of a batch is placed in the kiln, except for checking or action on the kiln's contents. The kiln door shall be closed immediately upon completion of checking or action.

(4) Consult the O&M Plan if, during burnout, there is visible emission from the kiln.

301.3 **Alternative Threshold:** The threshold of 150 pounds per day of total VOC from all investment casting operations in Section 301 is raised to 160 pounds per day for a facility to which the following apply:

a. The 160 lb/day threshold is made a part of the facility's Air Pollution Permit; and

b. The facility makes molds and/or conducts mold burnout no more than 6 days per week, or

c. The facility makes molds and/or conducts mold burnout no more than 313 days per year.

302 **MAINTENANCE:** Any person subject to this rule shall operate and maintain in proper working order all process equipment in which VOC-containing materials are used or stored.

303 **STORAGE AND DISPOSAL OF VOC:** An owner or operator shall comply with the following provisions:

303.1 Store all VOC-emitting materials, including but not limited to waste binders, waste solvents, and their residues, in closed containers which are legibly labeled with their contents.

303.2 Use suitable disposal methods. Suitable disposal includes legal deposit into sewers, laundering of wiping materials, collection in closed containers (including impervious bags), and removal by a disposal service.

303.3 Choose one of the following:

a. Keep adequate records of the disposal/recovery of each VOC-containing material; or

b. If adequate records of the disposal/recovery of a VOC-containing material are not kept, it is the option of the Control Officer to count as emission to the air the VOC contained in that material, as determined from records of the material's usage.

304 REQUIREMENTS FOR AIR POLLUTION CONTROL EQUIPMENT

304.1 Operation and Maintenance (O&M) Plan Required for ECS:

a. An owner or operator shall provide and maintain (an) O&M Plan(s) for any ECS, any other emission processing equipment, and any ECS monitoring devices that are used pursuant to this Rule 341 or to an air pollution control permit.

b. The owner or operator shall submit to the Control Officer for approval the O&M Plans of each ECS and each ECS monitoring device that is used pursuant to this Rule 341.

c. The owner or operator shall comply with all the identified actions and schedules provided in each O&M Plan.

304.2 Providing and Maintaining ECS Monitoring Devices: Any person incinerating, adsorbing, or otherwise processing VOC emissions pursuant to this rule shall provide, properly install and maintain in calibration, in good working order and in operation, devices described in the facility's O&M Plan that indicate temperatures, pressures, rates of flow, or other operating conditions necessary to determine if air pollution control equipment is functioning properly and is properly maintained.

304.3 O&M Plan Responsibility: An owner or operator of a facility that is required to have an O&M Plan pursuant to subsection 304.1 must fully comply with all O&M Plans that the owner or operator has submitted for approval, but which have not yet been approved, unless notified otherwise by the Control Officer in writing.

SECTION 400 – ADMINISTRATIVE REQUIREMENTS (NOT APPLICABLE)

SECTION 500 – MONITORING AND RECORDS

501 ECS USE:

501.1 On each day an Emission Control System is operated pursuant to this rule, a continuous, permanent record shall be maintained both of the times such

system was used to comply with this rule and of the amount and VOC-content of each binder controlled by the ECS.

501.2 Operation and Maintenance:

a. On each day that an Emission Control System is used to comply with this rule, a record shall be made of the operating parameters of the key systems described in the O&M Plan.

b. For each day or period in which the O&M Plan requires that maintenance be performed, a record shall be made of the maintenance actions taken, within 24 hours of maintenance completion.

c. An explanation shall be entered for scheduled maintenance that is not performed during the period designated in the O&M Plan.

502 RECORDKEEPING AND REPORTING: An owner or operator subject to this rule shall keep the following records and lists in a consistent and complete manner, and shall make them available to the Control Officer upon request. Records of the previous 12 months, requested during normal business hours, shall be made available without delay. Each of the following records shall be maintained for a minimum of five years:

502.1 Current List: A current list shall be maintained of all VOC-containing materials as received by the facility, such as binders and/or binder components, maskants, coatings, cleaning solvents, lubricants and any other VOC-containing substances related to investment casting. Include the VOC content of each in pounds per gallon or grams per liter.

a. Type of Material: The listing for each material shall also include a brief description that indicates the purpose or use of the material, for example: "zirc. binder," "mold-binder component", "cleaner", "wash," "bearing lube", "topcoat", "releasing", etc.

b. Exception: This rule does not require listing or recording of material arriving at the facility with less than 1.1% organic compound content.

502.2 Use: Records shall be maintained which show the type, amount used, and VOC content, expressed in either pounds of VOC per gallon or grams of VOC per liter, of each VOC-containing material. Records shall be updated according to the following schedule. Materials differing only in brand or manufacturer but having the same composition and formula may be totaled as a single material.

a. Monthly: By the end of the following month, update each month's usage of all VOC-containing materials except as provided in subsections "b" and "c" following.

b. Yearly: By January 31, update the usage figures for the year just past for the materials of which less than 15 gallons fluid or 100 lb (45 kg) solid are used in any year.

c. Daily: Daily update usage of all binders if any binder(s) used have a VOC content exceeding 3.5 lb VOC/gallon (measured minus water and non-precursor compounds) and are not controlled by an ECS.

503 COMPLIANCE DETERMINATION – TEST METHODS: The test methods as they exist on December 16, 1998, as listed below, are adopted by reference. This adoption by reference includes no future editions or amendments. Copies of test methods referenced in this Section 503 are available at the Maricopa County Air Quality Department, 1001 N. Central Ave., Phoenix, AZ, 85004. When more than one test method is permitted for a determination, an exceedance of the limits established in this rule determined by any of the applicable test methods constitutes a violation of this rule.

503.1 Quantification of VOC and solids content of binders, required in order to comply with subsections 301.1b and 301.1c, shall be determined using:

a. The EPA Reference Method 24 (40 CFR, Part 60, Appendix A), or Method 31 of California's Bay Area Air Quality Management District as amended April 15, 1992, or by the April 1997 revision of California's South Coast Air Quality Management District Method 313-9, or by a current Certified Data Sheet, signed by an official of each facility that formulated the binders.

b. If an averaging scheme is used pursuant to subsection 301.1c, the owner or operator shall sample each binder formulation at least once per year during the time any binder(s) exceeding 3.5 lb/gal. is being used, and record the VOC content as determined by EPA Method 24 at a testing laboratory.

503.2 The control efficiency of an Emission Control System or other control equipment/system used pursuant to subsection 301.1 or subsection 301.2 shall be determined according to EPA Reference Methods 18, 25, or an applicable submethod of Method 25 (Title 40, CFR Part 60, Appendix A).

503.3 Capture efficiency of an Emission Control System required by subsection 301.1a shall be determined by mass balance in combination with ventilation/draft rate determinations referenced in subsection 503.4, or by Method 204 and its applicable submethods, Appendix M. 40 CFR 51.

503.4 Ventilation/draft rates of an Emission Control System required by subsection 301.1 shall be determined by EPA Reference Methods 2, 2A, 2C, or 2D (40 CFR Part 60, Appendix A).

503.5 The following equation is used to correct the VOC concentration to 7.0% oxygen, using the percent oxygen of the emission test:

(VOC concentration) x (20.9 - 7.0) / (20.9 - O_2%) = Adjusted VOC concentration, where:
"VOC concentration" and "O_2%" are actual emission-test results.

504 AVERAGING: For metal investment casting facilities using any binder exceeding 3.5 lbs VOC/gallon less water and non-precursor compounds, daily-weighted averaging shall be performed on each day of such usage that demonstrates compliance with subsection 301.1c. Averaging shall be performed as follows:

504.1 Emission Computation Schedule: Each workday's VOC emissions and the daily-weighted average expressed in grams of VOC per liter of binder (or lb/gal) shall be computed and recorded no later than 12 hours after the end of that workday. Binder used in any day shall have all its emitted VOC ascribed to that day even if evaporation is not complete until a following day. At the end of a day, the numerical quantity of any leftover binder which will not be used again, shall be added to the sum of the total binder used of that same formulation used on that day. However, the amount of leftover binder does not need to be added to the sum of the total binder used on that day if such binder is stored in sealed container(s), and a determination of VOC content is made by Method 24 and recorded in the log, prior to removal from the site.

504.2 Bulk Accounting: A separate account shall be kept and updated as bulk binder ingredients arrive and as such ingredients are used up. This account shall include deliveries of VOC-containing diluents such as alcohol and other make-up solvents. Purchase order and inventory records can suffice for this if they are at all times kept complete, in a form usable for such accounting, and available to the Control Officer.

504.3 Averaging Schedule: A list shall be kept current containing the name/designation of each binder formulation and the amount of each constituent in each formulation, and including the mass of VOC per unit volume of binder, less water and non-precursor organic compounds. The amounts of each binder formulation used, including make-up formulations, shall be recorded at the end of each mold-making shift. The daily-weighted average expressed in grams VOC per liter of binder (or lb/gal), less water and non-precursor organic compounds, shall be computed and recorded no later than 12 hours after the end of each workday.

504.4 MATHEMATICALLY CALCULATING THE DAILY-WEIGHTED AVERAGE: The daily-weighted average VOC content of all the binders used in a day facility-wide, a quantification required in order to comply with subsection 301.1c, shall be calculated using the following equation and be expressed in units of mass of VOC per unit volume of binder excluding any water and any non-precursor organic compounds (non-precursors).

$$VOC_w = \frac{V_1C_1 + V_2C_2 + \ldots\ldots\ldots + V_nC_n + M_{va}}{V_1 + V_2 + \ldots\ldots\ldots\ldots V_n + V_{va} + V_{sa}}$$

where:

VOC_w = The daily-weighted average VOC content of all "n" binder formulations ("a" through "n") used during a day throughout the facility expressed in grams of VOC per liter of binder (or lb/gal) after water and non-precursors are excluded.

C_1 = The VOC content of the first formulation used on a production day in grams per liter of binder (lb/gal), excluding water and non-precursors.

C_2 = The VOC content of the second binder-formulation used on a production day, in grams per liter of binder (or lb/gal), excluding water and non-precursors.

C_n = The VOC content of the very last binder formulation used on a production day when a total of "n" formulations were used, and the only formulation remaining to be accounted for. It is expressed in grams VOC per liter of binder-formulation "n" (or lb/gal), excluding water and non-precursors.

M_{va} = The total mass of VOC added to any previously formulated binder used during the course of the day expressed in grams (or lbs). This includes the VOC portion of added materials which also contain non-VOC components.

V_1 = The total volume used throughout the day of the first binder formulation used that day, expressed in liters (or gal), excluding the volume of any water and the volume of any non-precursors.

V_2 = The total volume used throughout the day of the second binder formulation used that day, in liters (or gal), excluding the volume of water and non-precursors.

V_n = The total volume used throughout the day of the very last binder formulation used that day, when a total of "n" formulations were used. It is expressed in liters (or gal) of formulation "n" not including the volume of any water and non-precursors.

V_{va} = The total volume of VOC in liters (or gal) added to any and all previously formulated binders during the course of the day for make-up, viscosity reducing, or other purpose(s). If such VOC is used in a mixture containing non-VOC components, the volume of the non-VOC portion is excluded when making calculations.

V_{sa} = The total volume of solids in liters (or gal) added during the day to any already formulated binders used during that day such solids are added. Such volume shall be equivalent to the volume of solid material remaining after any volatile material has been removed by the drying oven under the conditions specified in a Method 24 test, as referenced in Section 503.

REGULATION III – CONTROL OF AIR CONTAMINANTS

RULE 342
COATING WOOD FURNITURE AND FIXTURES

INDEX

SECTION 100 – GENERAL

101 PURPOSE

102 APPLICABILITY

SECTION 200 – DEFINITIONS

201 ADHESIVE

202 AEROSOL-SPRAY COATING

203 AIR-ATOMIZED SPRAY (GUN)

204 ARCHITECTURAL COATING

205 BASECOAT

206 CERTIFIED PRODUCT DATA SHEET

207 COATING

208 CONVENTIONAL AIR-ATOMIZED SPRAY (SYSTEM)

209 CUSTOM REPLICA MILLWORK

210 DAY

211 DILUENT

212 ELECTROSTATIC APPLICATION

213 EMISSION CONTROL SYSTEM (ECS)

214 FACILITY

215 FAUX FINISH

216 FINISHING MATERIAL

217 HIGH SOLIDS STAINS

218 KILOGRAMS VOC PER KILOGRAM OF COATING SOLIDS

219 LOW PRESSURE SPRAY GUN

220 LOW SOLIDS STAINS

221 NONPERMANENT FINAL FINISH

222 POUNDS VOC PER POUND OF COATING SOLIDS

223 REPAIR COATING

224 RESTRICTED-USE GUN

225 SEALER OR PRIMER

226 SINGLE RESIN-LAYER FINISH

227 STAIN

228 STRIPPABLE COATING

229 STRIPPING OPERATION

230 TOPCOAT

231 TOUCH UP COATING

232 EFFICIENCY

233 VOC-BORNE COATING

234 VOC-SOLVENT

235 WASHCOAT

236 WOOD MILLWORK

237 WOOD-PRODUCT

238 WORKING DAY

SECTION 300 – STANDARDS

301 LIMITATIONS–VOC CONTENT

302 LIMITATION OF CONVENTIONAL AIR-ATOMIZED SPRAY AND OTHER SPRAY METHODS ATOMIZING WITH HIGH-PRESSURE AIR

303 OPERATION AND MAINTENANCE

304 CLEANUP AND CLEANING SUPPLY AND APPLICATION EQUIPMENT

305 HANDLING AND DISPOSAL OF VOC

306 DESIGNATION OF VOC-CONTENT REQUIREMENT

307 EXEMPTIONS

SECTION 400 – ADMINISTRATIVE REQUIREMENTS

401 COMPLIANCE SCHEDULE

402 REGULATORY CLARIFICATION

403 GUN TAGGING REQUIREMENTS

SECTION 500 – MONITORING AND RECORDS

501 RECORDKEEPING AND REPORTING

502 COMPLIANCE DETERMINATION–TEST METHODS

APPENDIX A TO RULE 342

APPENDIX B – A SHORT-FORM OPTION

APPENDIX C TO RULE 342

Adopted 04/03/96
Revised 11/20/96
Revised 09/25/13

MARICOPA COUNTY
AIR POLLUTION CONTROL REGULATIONS

REGULATION III – CONTROL OF AIR CONTAMINANTS

RULE 342
COATING WOOD FURNITURE AND FIXTURES

SECTION 100 – GENERAL

101 **PURPOSE:** To limit emissions of volatile organic compounds from the surface preparation and coating of wood furniture and fixtures.

102 **APPLICABILITY:** The provisions of this rule apply to any facility in Maricopa County applying finishing material to furniture or fixtures made of wood or wood derived material. Simplified provisions of Appendix B in this rule may be used by facilities which agree to a permit limit of less than 10 tons of VOC emissions per year. For sources emitting less than 2 tons of VOC per year, consult subsection 307.2d. This rule does not apply to the coating of any millwork included under SIC #2431.

SECTION 200 – DEFINITIONS: For the purpose of this rule, the following definitions shall apply, in addition to those definitions found in Rule 100 (General Provisions and Definitions) of these rules. In the event of any inconsistency between any of the Maricopa County air pollution control rules, the definitions in this rule take precedence.

201 **ADHESIVE:** Any substance, usually having a fluid phase during application, used principally to bond two or more surfaces into close proximity with one another.

202 **AEROSOL SPRAY COATING:** A coating which is sold in a hand-held, pressurized, non-refillable container, usually of less than 22 fluid ounces (0.66 liter) capacity, and which is expelled from the container in a finely divided form when a valve on the container is depressed.

203 **AIR-ATOMIZED SPRAY (GUN):** Equipment used to apply coatings in which the chief means of atomizing the coating is via pressurized air which also mixes into the cloud of coating particles after expulsion from a spray nozzle.

204 **ARCHITECTURAL COATING:** Any coating applied to stationary structures and their appurtenances, to mobile homes, to pavements or to curbs.

205 **BASECOAT:** A coat of colored material, usually opaque, that is applied before graining inks, glazing coats, or other high-hiding finishing materials. A basecoated surface usually receives a topcoat also.

206 **CERTIFIED PRODUCT DATA SHEET:** A document, signed by an officer of a coating-supplying operation, stating precisely the maximum VOC content of a particular coating as supplied.

207 **COATING:** Any liquid, fluid, or mastic composition which is converted to a solid (or semi-solid) protective, decorative, or adherent film or deposit after application to a substrate as a thin layer.

208 **CONVENTIONAL AIR-ATOMIZED SPRAY:** Any spray coating method in which the coating is atomized principally by mixing it with compressed air at an air pressure greater than 10 pounds per square inch (gauge) at the point of atomization, and which is not used with an electrostatic transfer system. Airless and air-assisted airless spray technologies are not conventional air-atomized spray because the principal means of atomizing the coating is via hydraulic pressure and not by mixing the coating with compressed air.

209 **CUSTOM REPLICA FURNITURE:** Furniture individually produced or repaired after an order has been received from a client specifying a particular style and period, using both the style and the methods of construction, including materials, joinery, and finishes, which are authentic to the period.

210 **DAY:** A period of 24 consecutive hours beginning at midnight.

211 **DILUENT:** For the purpose of this rule, any fluid in or added to a coating such as thinner, retarder, reducer, solvent, or drying accelerator which solubilizes, adjusts concentration, viscosity, flow, or drying rates and which evaporates as the coating film solidifies and cures.

212 **ELECTROSTATIC APPLICATION:** A method of applying coating by electrically charging coating droplets or particles causing their deposition onto a substrate by electrostatic attraction.

213 **EMISSION CONTROL SYSTEM (ECS):** A system for reducing emissions of organic compounds, consisting of both collection and control devices which are approved in writing by the Control Officer and are designed and operated in accordance with good engineering practice.

214 **FACILITY:** For the purpose of this rule, all the pollutant-emitting activities located on one or more contiguous or adjacent properties, under the control of the same person or persons under common control, and described by one or more of the industrial groupings listed in Section 238 of this rule.

215 **FAUX FINISH:** A finish intended to simulate a surface other than wood, including, but not limited to, stone, sand, metal, fur and leather.

216 **FINISHING MATERIAL:** A coating other than one designed solely or principally as an adhesive, temporary maskant, and/or preservative. For wood furniture and fixtures, finishing materials include, but are not limited to, topcoats, sealers, primers, stains, basecoats, washcoats, enamels, toners, glazes, and graining inks.

217 **HIGH SOLIDS STAINS:** Stains which are formulated to enhance wood grain and change wood color, but not conceal surface grain. For the purpose of this rule, high solids stains are stains that contain at least 120 grams of solids per liter (1 lb/gal) of stain as applied, and can include wiping stains and glazes.

218 **KILOGRAMS VOC PER KILOGRAM OF COATING SOLIDS:** A measurement that is used in this rule to express the VOC content of a coating. For any coating, kilograms VOC per kilogram coating solids is numerically identical to both pounds of VOC per pound of coating solids and to grams VOC per gram of coating solids. Abbreviations used include kg VOC/kg solids (lb VOC/lb solids) or simply kg/kg (lb/lb).

219 **LOW PRESSURE SPRAY GUN:** An air-atomized spray gun which by design functions best at tip pressures below 10 psig (0.7 bar) measured according to subsection 502.2 of this rule, and for which the manufacturer makes no public claims that the gun can be used effectively above 12 psig (0.8 bar).

220 **LOW SOLIDS STAINS:** Stains which are formulated to enhance wood grain and change wood color, but not conceal surface grain. For the purpose of this rule, low solids stains are stains that contain up to 120 grams of solids per liter (1 lb/gal) of stain as applied, and include sap stain, toner, and non-grain-raising (NGR) stains.

221 **NONPERMANENT FINAL FINISH:** A material such as wax, polish, non-oxidizing oil or similar substance which retains its effect only temporarily and must be periodically reapplied to a surface to maintain or restore the material's intended effect.

222 **POUNDS VOC PER POUND OF COATING SOLIDS:** A measurement of a coating's VOC content identical with kilograms VOC per kilogram of coating solids.

223 **REPAIR COATING:** A coating used to recoat portions of a previously coated product to cover mechanical damage to that previous coating following normal painting operations.

224 **RESTRICTED-USE GUN:** Any spray gun which atomizes coating using compressed air, such that in normal use or a use advertised by the manufacturer or distributor, the tip pressure exceeds 12 psig (0.8 bar) in measurements done pursuant to subsection 502.2. Restricted-use gun also includes, but is not limited to, all conventional air-atomized spray guns.

225 **SEALER OR PRIMER:** A film-building finishing material used to seal the pores of wood or wood-derived material before additional coats of finishing material are applied. Finishing materials used primarily to alter the appearance or color of the substrate, such as stains, washcoats, glazes, inks, and toners, are not sealers.

226 **SINGLE RESIN-LAYER FINISH:** A completed, consumer ready finish, which has received only one application of resin-based coating serving as both sealer and topcoat, and having a total average dry finish thickness from the top of the finish to the surface of the wood-product substrate not exceeding 3 mils (0.076 mm) before

sanding, as determined pursuant to the test method in subsection 502.3. If a washcoat is also used, the finish is not a single resin-layer finish.

227 **STAIN:** A coating, excluding sealers and topcoats, that is formulated to enhance wood grain and change wood color, but not conceal surface grain. Stain includes all high solids stains and all low solids stains.

228 **STRIPPABLE COATING:** A coating which is applied to spray booth surfaces to receive the overspray and protect the substrate, and which is designed to be readily pulled off in strips or sheets and disposed of.

229 **STRIPPING OPERATION:** Any operation in which organic solvent is used to remove coating from a substrate.

230 **TOPCOAT:** The last permanent, functional film-building finishing material applied to a manufactured wood product. When the wood-product substrate is already sealed with sealer, any further coats that build a functional film are topcoats. Finishing materials used primarily to alter the appearance or color of the substrate, such as stains, washcoats, glazes, inks, and toners are not topcoats. A nonpermanent final finish is not a topcoat.

231 **TOUCH UP COATING:** A coating used to cover minor coating imperfections after the main coating operation.

232 **TRANSFER EFFICIENCY:** The ratio of the weight of coating solids deposited on an object to the total weight of coating solids used in a coating application step or series of such steps, expressed as a percentage.

233 **VOC-BORNE COATING:** A coating in which the volatile portion contains, by weight, more VOC than water.

234 **VOC-SOLVENT:** A solvent or diluent, used to solvate, dilute, reduce, thin, clean or strip, in which the weight-percent of VOC exceeds the weight percent of water.

235 **WASHCOAT:** A transparent special purpose coating having a solids content by mass of 12.0 percent or less, and which is used to seal wood-product surfaces for any of the following purposes: to prevent undesired staining, to control penetration of subsequent finishes, to provide a barrier when paper laminates are applied to the wood-product, to seal glazes, and to improve adhesion of a waterborne topcoat.

236 **WOOD FURNITURE AND FIXTURES:** All furnishings made of wood-product that are included in Standard Industrial Classification (SIC) numbers 2434, 2511, 2512, 2517, 2519, 2521, 2531, 2541, or 2599 as well as wood-product on convertible furniture under SIC number 2515.

237 **WOOD-PRODUCT:** Wood or wood-derived material, such as chipboard, particle board, fiberboard, pressed board, paper, and any other material derived from wood, bamboo, cane, or rattan, that retains some of the physical structure(s) of such original material(s), even if only at a microscopic level.

238 WORKING DAY: A day, or any part of a day, in which a facility is engaged in manufacturing.

SECTION 300 – STANDARDS

301 LIMITATIONS – VOC CONTENT:

301.1 No person shall apply a topcoat or sealer to wood furniture or fixtures unless VOC content is limited either to the pounds of VOC per pound of solids (kg VOC/kg solids) in Column A or to the grams of VOC per liter in column B:

a. General VOC Limits of Coatings

Table 1

	Column A **Lb VOC/lb solids**	**Column B** **Grams VOC/liter ****
Topcoat	1.8	635
Sealer	1.9	645
Acid-cured, alkyd amino topcoat	2.0	655
Acid-cured, alkyd amino vinyl sealer	2.3	680
	**less non-precursor compounds & water	

b. Option: Lower VOC topcoat and Unlimited Sealer: There is no VOC limit on sealer when the sealer's topcoat does not exceed 0.8 lb VOC/lb (0.8 kg/kg).

c. Coatings with no VOC limits: Stains, washcoats, glazes, toners, inks, and other coatings not specified in this subsection 301.1 nor in subsection 301.2 have no VOC limits.

301.2 Strippable Booth Coatings: No person shall use a strippable booth coating unless, as applied, the coating has either no more than 0.8 lb VOC/lb solids or no more than 3.0 lb/gal (360 g/l) less non-precursor volatile compounds.

301.3 Emission Control System (ECS) as an Alternative Control: A facility may meet the VOC limits of either or both subsections 301.1 and 301.2 if the owner or operator complies with all provisions in this rule's Appendix C and with the other applicable provisions of this rule.

301.4 Averaging: An owner or operator of a larger furniture coating facility meeting the applicability requirements of subsection b., in this rule's Appendix A, may comply with subsection 301.1a. of this rule by complying with Averaging-Formula 1 or Averaging-Formula 2 in Appendix A and by complying with all other applicable provisions of Appendix A.

301.5 Smaller Source Option: The owner or operator of a facility that has emitted 2or more tons but less than 10 tons per year of VOC from all wood coating

and associated operations is exempted from all provisions under Sections 300, 400, and 501 (but not Sections 100, 200, and 502) if all provisions are complied with in this rule's Appendix B. Sources emitting less than 2 tons of VOC per year may be allowed exemptions pursuant to subsection 307.2d.

302 LIMITATION OF CONVENTIONAL AIR-ATOMIZED SPRAY AND OTHER SPRAY METHODS ATOMIZING WITH HIGH-PRESSURE AIR:

302.1 Evidence of Transfer-Efficient Spray Equipment: No person shall spray wood furniture with coating exceeding 1 lb VOC/lb solids (1 kg VOC/kg solids) without providing evidence of possession and use of a low pressure spray gun or system, an electrostatic system, or a system in which the energy for atomization is provided principally via hydraulic pressure; this includes air assisted airless and ultra-low-volume-air assisted technologies. Such requirement does not apply to any facility, activity or person specifically exempted by applicable subsections of Section 307 of this rule, or to any specific system which is approved by the Administrator as having a transfer efficiency consistently exceeding 64%.

302.2 Limitation of Air-Atomized Spray other than Low Pressure: No person shall use a conventional air-atomized spray gun or other *restricted use gun*, except:

a. To apply finishing materials that have a VOC content not exceeding 1.0 lb VOC/lb solids (1.0 kg/kg).

b. If VOC emissions from the finishing application station, employing such a gun, are captured and directed to an ECS, pursuant to the provisions of Appendix C.

c. For touch-up and repair under either of the following conditions:

(1) such application is performed after completion of the entire finishing operation; or

(2) such application is performed after applying stain, and before any further coating, by equipment having a total capacity not exceeding 2.1 gallons (8 liters).

d. To apply less than 5% of all coating pursuant to subsection 307.2.e.

303 OPERATION AND MAINTENANCE: Any person subject to this rule shall operate and maintain in proper working order all process equipment in which VOC-containing materials are used or stored.

304 CLEANUP AND CLEANING SUPPLY AND APPLICATION EQUIPMENT:

304.1 Booth Cleaning: No person shall clean spray booth components using a solvent containing more than 8.0 percent by weight of VOC, including water and non-precursor compounds, except for: conveyors; continuous coaters and their enclosures; and metal filters. If the spray booth coating is being replaced, a person shall use no more than 1.0 gallon (3.8 liters) VOC-solvent to clean the booth.

304.2 Cleaning Guns and Lines: A person shall collect all solvent used to clean spray guns and shall pump or drain all solvent used for line cleaning into non-leaking container(s). Such containers shall be immediately closed or covered after all the solvent has been collected, and shall remain so except when in use.

305 HANDLING AND DISPOSAL OF VOC:

305.1 Use and Storage: A person shall cover and keep covered each VOC-containing material intended for the day's production, which is not currently in use. A person shall store finishing and cleaning materials in closed containers.

305.2 Disposal of VOC and VOC-Containing Material: A person shall store all VOC-containing materials, including, but not limited to, rags, waste coatings, waste solvents and their residues, in closed containers which are legibly labeled with their contents and which remain covered when not in use.

306 DESIGNATION OF VOC-CONTENT REQUIREMENT: Effective May 3, 1996, a manufacturer of wood-furniture coatings which are subject to this rule shall provide on each coating container or as an accompanying specification of each coating container a designation of VOC content. For topcoats and sealers, this shall be in pounds of VOC per pound of coating solids (g/g) or in pounds VOC per gallon (g/l) less water and non-precursor volatile compounds. This requirement shall not apply to containers having a capacity of one liter (1.05 quart) or less.

307 EXEMPTIONS:

307.1 Total Exemption: The following materials are exempt from this rule: adhesives, architectural coatings, printing ink, and coatings not applied on or over a wood product substrate.

307.2 Partial Exemptions:

a. Touch-up Cans: Coatings in aerosol spray cans not exceeding 22 fl. oz. (0.66 liter) capacity used exclusively for touch-up and/or repairs are subject only to the recording requirements of this rule.

b. The following shall be exempt from subsection 301.1 and Section 302:

(1) The use of the following coating types when the annual total use of all such types together is less than 250 gallons (948 liters):

prepackaged aerosol spray cans which are not used for touch-up or repair, metal leaf finishes, and faux finishes.

(2) Refinishing, Replacement, and Custom Replica Furniture Operations: Any refinishing operation necessary for preservation, to return the furniture or fixture to original condition, to replace missing furniture to produce a matching set, or to produce custom replica furniture.

c. The coating for a single resin-layer finish which does not exceed a VOC limit of 3 lb VOC/lb solids for completed finishes up to 3 dry mils thickness or does not exceed 2.3 lb/lb for finishes over 3 dry mils is exempt from the VOC-limits of subsection 301.1 if all of the following conditions are met:

(1) The containers are clearly marked "FOR USE IN SINGLE RESIN LAYER FINISH";

(2) Facility records clearly identify this material: "DOES NOT MEET THE VOC LIMITS OF SECTION 301, RULE 342. – FOR USE ONLY IN SINGLE RESIN-LAYER FINISHES"; and

(3) The booth used to apply a single resin-layer finish above 2.3 lb VOC/lb solids is dedicated to that operation only, and is clearly labeled "FOR SINGLE RESIN-LAYER FINISHES ONLY".

d. Small Source Status: A furniture coating facility which at any time demonstrates that it currently meets all the requirements in subsections 307.2d. (1) and (2) following, is exempt from all provisions of this rule except for Section 303 "Operation & Maintenance" and Section 305 "Handling and Disposal of VOC". An operator of such an exempted facility shall keep on the premises current records of all coating related materials currently used, and their VOC content. For this purpose, a complete, updated set of receipts/invoices and Material Safety Data Sheets (MSDSs) will suffice if each receipt/invoice is retained on the premises at least two years.

(1) Facility records demonstrate that no more than a total of 55 gallons (209 liters) of VOC-borne wood-product coatings plus VOC-solvent are used in any month and that such monthly total divided by that month's number of days of coating application does not exceed 3.0 gallons (11.4 liters); and

(2) The facility emits less than 1814 kg (4000 lb) VOC, facility-wide per year from all wood-product coating operations including VOC in both solvent-borne and water-borne coatings, all VOC diluent added to coatings, all solvent cleaning and stripping, and VOC solvent used for coating equipment cleanup.

e. Using Conventional and other Restricted Use Guns; Red Tag: In addition to the uses of restricted-use guns allowed under subsections 302.2 a., b., and c., a person may use a conventional air-atomized or other restricted use gun to apply coatings exceeding 1 lb VOC/lb if all the following conditions are met:

(1) The volume of such coating applied in this way is less than 5% of the total volume of coating applied at the facility;

(2) Each gun has a red tag when spraying materials exceeding 1 lb VOC/lb. Requirements for gun tagging are in Section 403;

(3) A log shall be kept pursuant to subsection 501.2c. of the amount of coating used by each such gun. This shall be done daily or each time coating is added to the gun's coating reservoir; and semi-annual calculation shall be made, pursuant to subsection 501.2.

Errata Note1[1]

e. Using a Conventional or other Restricted Use Gun Identified by a Red Tag: In addition to uses allowed under subsections 302.2 a., b., and c., a person may use a conventional air-atomized or other restricted use gun to apply coatings exceeding 1 lb VOC/lb on the following limited basis:

(1) The volume of such coating applied in this way is less than 5% of the total volume of coating applied at the facility.

(2) Each gun always has a red tag when applying coatings exceeding 1 lb/lb. Tag requirements are in Section 403.

(3) A log shall be kept pursuant to subsection 501.2c, of the amount of coating used by each such gun. This shall be done daily or each time coating is added to the gun's coating reservoir; and semi-annual calculation shall be made, pursuant to subsection 501.2c.

SECTION 400 – ADMINISTRATIVE REQUIREMENTS

401 COMPLIANCE SCHEDULE: The following schedule applies, with exceptions for an Emission Control System provided in Appendix C.

401.1 Sources Emitting 50 TPY: Each facility which has applied for or received a Title V permit, or a permit with an annual VOC limit of 50 tons or more, or which has had an aggregate VOC emission to atmosphere after December 31, 1989, of 50.0 tons (45.35 Mg) or more in any calendar year or 300 pounds (136 kg) or more in any day, emitted in compliance with all requirements of this rule and have submitted a Control Plan. The Control Plan shall set forth

1 1 This errata note is not part of Rule 342. For the reader's convenience, the second subsection 307.2e. was an earlier draft of the section not intended to be left in the rule. It will be removed for the next revision of this rule.

the maximum VOC content of each coating-as-applied and provide documentation showing how these values were determined.

401.2 Other Sources: The schedule follows for any wood furniture and/or fixture facility with total VOC emissions to atmosphere in each of the years 1990 through 1995 of no more than 300 pounds (136 kg) in any day and 50.0 tons (45.35 Mg) in any calendar year, emitted from wood coating operations and associated cleaning processes:

a. A facility shall be in compliance with all applicable provisions of this rule, except for Section 301 and Section 302 by May 3, 1996. Such facility shall be in compliance with Section 301 and Section 302 of this rule by November 15, 1996.

b. Control Plan: A facility which has emitted more than 25 tons of VOC from coating operations in any of the years 1993 through 1995 must submit a Control Plan by August 1, 1996, setting forth the maximum VOC content and copies of the documentation showing how the coating-as-applied values were determined.

402 REGULATORY CLARIFICATION

402.1 Status with Respect to Rules 330 and 336: No wood furniture or fixture coating operation is subject to Rule 330 or to Rule 336.

402.2 Component Materials that were Subject to Prior Regulation: The regulatory status of facilities, owners or operators is not affected by the fact that component materials, such as wood composites or paneling, may have been subject to Reasonably Available Control Technology (RACT) or other regulatory requirements in their original manufacture, before their subsequent use by a facility in Maricopa County.

402.3 Other Rules: Nothing in this rule exempts a person from complying with the NESHAP (National Emission Standards for Hazardous Air Pollutants) for coating wood furniture and fixtures or from complying with any other applicable Federal, states, and local laws or regulations.

402.4 Coating over Wood Coating(s) the same as Coating onto Wood: The VOC-limits for finishing materials given in subsection 301.1 of this rule apply to such coatings whether applied directly onto any area of wood-product substrate or on any intermediate layer(s) of coating on the wood-product substrate.

403 GUN TAGGING REQUIREMENTS: An owner or operator shall use a red 4 square-inch vivid, durable tag, sticker, or painted emblem/label visible on the gun or within 3 ft of the gun on the gun's hose to meet the tagging/labeling requirements of subsection 307.2e.

SECTION 500 – MONITORING AND RECORDS

501 RECORDKEEPING AND REPORTING: An owner or operator shall keep the following records and lists in a consistent and complete manner and shall make them available to the Control Officer without delay during normal business hours. Each record shall be maintained a minimum of five years.

501.1 Current List:

a. VOC-Containing Materials: A current list of all VOC-containing material shall be maintained which contains their name or code and their VOC content. Any qualified single resin-layer finish shall be identified as such.

b. How to Express VOC Content:

(1) Non-Coatings: Use grams VOC/liter or lb VOC/gal. for reducers, thinners, cleaners, etc.

(2) Stains: Use grams VOC/liter or lb VOC/gal.

(3) Topcoats and Sealers: Use either lbs VOC/lb solids or g VOC/liter (lb VOC/gal), except:

(a) Any topcoat or sealer sprayed with a conventional or other restricted use gun shall be expressed in lbs VOC/lb solids.

(b) *Two VOC content values* must appear for each topcoat and each sealer that is expressed as grams VOC per liter or pounds VOC per gallon: both grams VOC/liter (lb VOC/gal) *including* water and non-precursor organic compounds, *and* grams VOC/liter (lb VOC/gal) *less* water and non-precursor organic compounds.

(4) Other Coatings: Use grams/liter (or lb/gal), or lbs VOC/lb solids for coatings that are neither sealers nor topcoats, such as washcoats, glazes, etc.

c. Acceptable Format: VOC-containing materials shall be listed neatly and completely. The following is an example of an acceptable method:

Example: Identify and list each VOC-containing material in one of the following 6 categories: 1. topcoats; 2. sealers; 3. catalyst/hardeners; 4. diluents, such as reducers, coating solvents and thinners; 5. cleaning and stripping solvents; and 6. other VOC-containing materials. Next to each material, record the VOC-content found on the container, an MSDS, an invoice, or other source.

d. Mix Ratios: A current list shall be maintained of the manufacturer's recommended mix ratio of components, including but not limited to adding reducers and catalyst/hardeners, except when the manufacturer has no recommendations for any additions.

501.2 Schedule for Recording Material Usage:

a. **Daily Updates for Non-Compliant Material:** The amount of each day's use of each topcoat, sealer or booth material that exceeds applicable VOC limits of Section 301 or Section 304 shall be totaled and logged by the end of the following workday. VOC content shall be entered for each such material.

b. **Monthly Update for Materials Compliant with Sections 301 and 304**: By the end of the following month, an owner or operator shall update the following records for each month:

(1) For each topcoat and sealer to which reducer is added at any time after its arrival at a facility, enter the VOC content in lb VOC/lb solids or in grams/liter (lb/gal) less water and non-precursor organic compounds**.**

(2) The amount of coating, the amount of catalyst/hardener, and the amount of reducer/coating diluent used.

(3) The quantity and type of organic solvent used each month for stripping and cleaning.

(4) The quantity of organic solvent disposed of offsite during the month just ended.

(5) **Exception:** Update yearly the totals of the usage of each VOC containing material known to be used in amounts less than 15 gallons (57 liters) per year.

c. **Semi-Annual Updates of Coatings Applied with Restricted Use Gun:** Records associated with the Section 302 limitations on the use of conventional air-atomized spray equipment and other restricted-use guns shall be kept. These records shall show for each semi-annual period the volume (VR) of finishing materials exceeding solids (1 lb VOC/ lb solids) (1 kg VOC/kg solids) applied with conventional air-atomized spray guns and other restricted use guns. In addition, the total volume of all finishing material (AMV) used throughout the facility shall be determined. The total volume (VR) so applied over the previous six-months is divided by the total of all coatings used in the same period (AMV) and these calculations and the result are entered in the log.

501.3 Disposal/Recovery: An owner or operator shall keep records of disposal/recovery of all VOC-containing materials.

502 COMPLIANCE DETERMINATION – TEST METHODS: When more than one test method is permitted for a determination, an exceedance of the limits established in this rule, as determined by any of the applicable test methods, constitutes a violation of this rule.

502.1 Measurement of VOC content, pursuant to the VOC-limits of subsections 301.1, 301.2, and 302.2, and subsections 304.1 and 307.2c., shall be conducted and reported in accordance with EPA Test Method 24 (40 CFR 60, Appendix A). Acetone content shall be determined within the context of Method 24 by EPA Method 311 or other method acceptable to EPA. Multi-part coatings including those with reactive diluent(s) shall be tested by Method 24 procedures.

502.2 Measurement of air pressure at the center of the spray gun tip and air horns of a conventional air-atomized spray gun (reference Section 302) shall be performed using a device in proper working order supplied by the gun's manufacturer for performing such a measurement.

502.3 Measurement of mil thickness to determine compliance with single resin-layer finish parameters in Section 227 and subsection 307.2c. shall be performed by draw bar and calculations using the weight and area of the film and the density of the cured coating solids, by a Tooke Inspection Gage according to the instructions of its manufacturer, or by other means used for the purpose by a major coating manufacturer's laboratory or quality control.

APPENDIX A TO RULE 342

AN AVERAGING ALTERNATIVE

a. **Purpose:** The averaging provisions of this Appendix to Rule 342 allow the owner or operator of a furniture coating facility, which meets eligibility requirements, increased options in choosing coating types. These provisions expand the range of the allowable VOC contents of coatings while limiting overall VOC emissions to amounts less than would be emitted at the VOC-content limits of subsection 301.1 of this rule.

b. **Eligibility to Apply:** The owner or operator of any furniture coating operation, reasonably capable of annually emitting more than 25 tons of VOC and having at least one of the following four statuses with respect to VOC emissions, may apply to average:

(1) Has emitted more than 25 tons (21.7 Mg) of VOC in any year since 1989 and has a Maricopa County Air Quality Permit or is under consideration for such permit by the Control Officer;

(2) Has in its permit a VOC-emissions limit of 50 tons or more;

(3) Has applied for or received Title V status.

c. **How to Apply:** An applicant shall submit a request for eligibility to the Control Officer. This request shall include a summary of the chief reasons for requesting eligibility for averaging.

(1) The Control Officer shall provide a brief questionnaire eliciting responses intended to reveal whether the operator has sufficient understanding and preparation to successfully average. This questionnaire shall require a sample of their intended recordkeeping format along with calculations containing the expected amount and VOC-contents of coatings intended to be used in averaging.

(2) The Control Officer may request confirmation, correction, or clarification from the owner or operator for responses to the questionnaire that are questionable; that appear unclear, erroneous, incomplete, or non-pertinent, or for which there is contrary evidence.

(3) The owner or operator shall submit a correctly completed questionnaire, signed by a responsible officer of the facility, no later than 14 calendar days prior to the first day of averaging.

(4) Control Officer approval of the completed questionnaire shall constitute an acceptance of application for minor permit revision. The Control Officer may request additional information characteristically required for minor revisions to the permits of wood furniture coaters as a class.

(5) Control Officer approval does not necessarily constitute satisfaction of all federal requirements nor preempt the EPA Administrator's asserting a right of approval.

d. Definitions of Terms used in an Averaging Regime:

(1) CREDIT CONSUMING COATING (EXCEEDING COATING): In an averaging regime, coating with average VOC content exceeding the neutral point for its particular coating type, such as topcoat, sealer, etc. A credit consuming coating requires the use of credit generating coating(s) in order that the combination of all coatings in use will not exceed the limit set by the left side of the averaging formula.

(**2**) **CREDIT CONSUMING PIECE/EXCEEDING PIECE:** In an averaging regime, a piece of furniture which is a member of a model-line of furniture receiving such a high proportion of credit-consuming coating that when the VOC contents and coating quantities received by the model-line, are entered into an averaging formula of Section i., the sum yielded by the right side of the formula is consistently larger than the sum yielded by the left side of the formula.

(3) CREDIT GENERATING COATING: A coating which has VOC content well below the neutral point and, thus, is used in an averaging regime to create surplus VOC credit(s) to offset the excess emissions of particular credit consuming coating(s).

(**4**) **CREDIT GENERATING PIECE:** In an averaging regime, a piece of furniture which is a member of a model-line of furniture receiving so much credit generating coating that when the VOC contents and coating quantities, received by the model-line, are entered into an averaging formula, the sum yielded by the right side of the formula is consistently less than the sum yielded by the left side of the formula.

(**5**) **NEUTRAL POINT:** The particular number representing the VOC content of a particular coating type having the mathematical property that if it is included in an averaging formula it has no effect on the numerical results of the formula, regardless of how much of the coating is used. The neutral point VOC content for each affected coating-type is as follows:

Using Formula 1:
Topcoat neutral point - 0.72 kg VOC/kg coating solids. (Stains, sealers, etc. do not appear in Formula 1)

Using Formula 2:
The neutral point VOC content for each of the 5 types of coating in Formula 2 is as follows:
Topcoat - 1.62 kg VOC/kg solids; sealer coat - 1.71; washcoat - 8.1; basecoat - 1.08

The neutral point for stains is expressed in kilograms VOC per liter of coating - 0.712 kg VOC/liter

e. Basic Requirements for all Averaging Regimes:

(1) Entire Workdays: Averaging regimes must be in place for no less than an entire 24 hour period and at all times during such 24-hour period. Normally, a workday will be the calendar day in which work commences. However, an owner or operator may

designate in writing a workday schedule beginning and ending at a specific time between 12 midnight and 4:30 AM if the last shift normally ends between midnight and 4:30 AM, unless the Control Officer issues written disapproval. The times of the averaging workday may be changed if written notification has been given the Control Officer at least five workdays before the start of the intended new schedule, and no communication of disapproval has been issued within this time by the Control Officer.

(2) **Averaging Applies Plant-Wide:** An averaging regime applies throughout a facility to all production furniture coating occurring during all 24 hours of a workday for which an averaging regime is declared.

(3) **No Exemption for Single Resin-Layer Finishes or Acid-Cured, Alkyd Amino Coatings:**

(a) In averaging regimes using Formula 2, for surfaces which receive in total only one application of film building coating, the neutral point for that coating shall be the same as that for a sealer, 1.71 kg VOC/kg solids, and it shall be totaled with sealers in the averaging formula.

(b) Acid-cured, alkyd amino coatings, with or without vinyl chemistry, shall have the same neutral points in Formula 2 as do other sealers and topcoats (1.71 and 1.62, respectively) and shall be totaled in with the other sealers and topcoats in Formula 2.

(4) **Identifying Credit Consuming Models:** Each furniture/finish model must be identified which on average does not by itself (i.e., by the combination of all coatings it receives) meet the applicable averaging formula (and must be offset by models whose coatings generate VOC credits). The model name and/or code of each credit consuming model must be identified in a permanent record for that purpose, along with a designation indicating that the model produces excess emissions. This designation can be the average grams of VOC above the formula limit, the maximum grams above the limit, number of exceeding grams at the first standard deviation, relative risk, or other term(s) created by the owner or operator that fulfill this purpose for the facility.

(5) **Exemption for Physically Separated Lines:**

(a) At the Control Officer's discretion, an exemption from the requirement that the entire facility participate when an averaging regime is in effect can be granted for an additional coating line if: Such a coating line is both physically separate from the operations involving averaging and all monitoring, recordkeeping, and coating equipment including coating reservoirs are kept separate from the monitoring, recordkeeping and coating equipment participating in an averaging regime. The burden of demonstration is on the owner or operator that there is no significant risk of confounding enforcement, monitoring, recordkeeping, and equipment activities between the lines.

(b) **Dual Averaging Regimes:** A facility which has received such a subsection e.(5)(a) exemption has the option of running each separated line using an averaging regime. However, all requirements of this rule must be complied with by each separated line.

(6) **Declaration of Averaging:** On any day of a Control Officer presence at a facility permitted to average, the owner or operator shall correctly announce without delay whether an averaging regime is currently in effect, and on an averaging day shall also forthwith supply a listing of each coating participating in the averaging formula, along with the VOC content and the coating category of each.

f. **Recordkeeping and Monitoring:** In addition to the requirements of Section 501 of this rule, an owner or operator shall do the following:

(1) **Daily List the Components:** Prior to applying any coating on an averaging day, a list shall be made of each coating name/code to be used that day in the averaging formula and its expected VOC content as applied. This list shall be available to the Control Officer without delay.

(2) **Daily calculation Deadline:** After each day using averaging, an owner or operator shall determine the results of averaging for that completed production day by midday on the next workday. These results shall be put into hardcopy in the same format that the owner or operator used in the approved application questionnaire. Some other format may be used if the Control Officer has given the format approval before beginning averaging.

(3) **Log in:** An owner or operator shall arrange and keep the hardcopy results of each day's averaging in a form that allows the results of each averaging day within the 13 months prior to a Control Officer visit to be accessed by the Control Officer without delay.

(4) **Content of Weekly Summary of Production-Coating:** By the end of the first shift of the workweek, totals for the workweek just completed shall be compiled as follows:

(a) For each model and color, the total number of furniture pieces coated;

(b) The name and quantity applied for each stain, washcoat, basecoat, sealer, topcoat, and diluent recorded. The quantity of stain shall be expressed in liters; the quantity of the other coatings expressed in kilograms;

(c) The VOC content for each such coating and diluent, expressed in kg VOC/kg solids; and the non-precursor organic compound (NP) content of each, expressed either in kg NP/kg solids or kg NP/kg coating-including-NP shall be recorded, except that the VOC content of each stain shall be expressed in kg VOC per liter of coating, including any water or non-precursors.

(d) **Monthly Totals for Non-Averaged Coatings:** For coatings that do not participate in the averaging formulas, the total kilograms used shall be updated monthly. Coatings of the same type may be totaled together under a single VOC-content value if their VOC contents are within ± 2% of that value.

(5) **Handling Unavoidable Data Loss and Data Processing Equipment Malfunctions:** An owner or operator shall put an accounting system in continual effect that allows the retrieval or reconstruction of data. When data required by this rule is lost, the Control Officer shall be notified forthwith and such data shall be reconstructed and due calculations completed within two facility workdays. The Control Officer may request that a hardcopy of the retrieved information be provided him/her by the same clock time, two workdays hence.

(6) **Report Submittal Schedule:**

(a) **Semi-Annual Reports:** An owner or operator shall submit a summary of the records, including all exceedances, by July 20 for the first half of the year and by January 20 of the following year for the second half. Included shall be certified data sheets for coatings whose VOC content is determined by the supplier and not directly by the facility, and a statement that the coatings for which certified data sheets are submitted were the coatings actually used. All the foregoing shall be certified to and signed by a responsible official of the facility.

(b) **Initial Compliance Report:** Within 60 days after the third day ever of averaging, an owner or operator shall submit a report to the Control Officer containing all the elements required by subsection f.(6)(a) above.

g. **Test Procedures and Requirements:**

(1) An owner or operator shall cause to be performed EPA Method 24 tests on a sample of each coating intended to be used in an averaging regime, prior to using such coating in any averaging regime. These samples shall be taken at three levels of dilution: prior to adding any diluent; with the minimum weight of solvent/diluent typically used; and with the maximum weight of solvent/diluent expected ever to be needed.

(2) An acetone determination shall be made in conjunction with Method 24 using EPA Method 311 or other method approved by EPA at the three dilution levels stipulated in subsection g.(1).

(3) **The Status of Certified Product Data Sheets:** After the initial Method 24 tests pursuant to subsection g.(1), an owner or operator may substitute the specific certified product data sheet, based on Method 24, for any coating for any of the three levels of dilution stipulated in subsection g.(1), in lieu of directly overseeing the Method 24 tests.

(a) However, a certified product data sheet is not valid and shall not be submitted if it is neither for a dilution level in subsection g.(1) nor for the actual dilution level of a coating as applied during averaging.

(b) When the results of a Method 24 test, performed pursuant to a Control Officer initiative or directive, differ from the certified product data sheet, the Control Officer may require an owner or operator to have Method 24 tests conducted at a testing facility agreed to by the Control Officer and may require that the results of such tests be the values used in calculating averages.

h. Sanctions:

(1) If an exceedance of the limits of an averaging formula is determined to be in violation of this rule, at least two violations may be charged: at least one violation for exceeding the limits in subsection 301.1 and a separate violation for exceeding the limit determined by the averaging formula in Section i. of this Appendix. Unless the Control Officer chooses otherwise, the number of violations issued for an exceedance of an averaging limit shall be one greater than the number of exceeding coatings participating in the averaging formula. Each day the average is exceeded will be counted as a separate incident.

(2) **Continuance:** The Control Officer may disallow an owner or operator the continuance of averaging at a facility which has failed to comply with one or more provisions of this Appendix on three separate days in any period of 12 consecutive months, or which has been found guilty of a major violation of such provisions, except as prohibited by other rule or statute.

i. Two Averaging Formulas: The following are the two mathematical formulas from which one may be chosen to be used for an averaging regime.

(1) If topcoats consistently average less than 0.72 kg VOC per kg solids on a mass solid basis, an owner or operator may use Formula 1.

$$\sum_{i=1}^{n} 0.72(TC_i) \geq \sum_{i=1}^{n} ER_{TC_i}(TC_i) \quad \textbf{Formula 1}$$

(2) For other coating systems using averaging, Formula 2 shall be used.

$$\sum_{i=1}^{n} 1.62(TC_i) + 1.71(SE_i) + 8.1(WC_i) + 1.08(BC_i) + 0.712(ST_i) \geq$$
$$\sum_{i=1}^{n} ER_{TC_i}(TC_i) + ER_{SE_i}(SE_i) + ER_{WC_i}(WC_i) + ER_{BC_i}(BC_i)$$
$$+ ER_{ST_i}(ST_i) \quad \textbf{Formula 2}$$

where:

N = number of finishing materials participating in averaging;

TC_i	=	kilograms of solids of topcoat *i* used;
SE_i	=	kilograms of solids of sealer *i* used;
WC_i	=	kilograms of solids of washcoat *i* used;
BC_i	=	kilograms of solids of basecoat *i* used;
ST_i	=	liters of stain *i* used (water and any non-precursor content are not subtracted);
ER_{TC_i}	=	VOC content of topcoat *i* in kg VOC/kg solids, as applied;
ER_{SE_i}	=	VOC content of sealer *i* in kg VOC/kg solids, as applied;
ER_{WC_i}	=	VOC content of washcoat *i* in kg VOC/kg solids, as applied;
ER_{BC_i}	=	VOC content of basecoat *i* in kg VOC/kg solids, as applied; and
ER_{ST_i}	=	VOC content of stain *i* in kg VOC/liter, as applied.

j. **Pre-RACT Coating use is Limited:** If a coating was used before 1993, and is still used for the same purposes, and it had a VOC content then which is lower than the neutral point for that coating type, then that coating may only be used in the averaging equation if the coating is now lower in VOC than before 1993. If that coating is used in averaging, the left side of the averaging formula must reflect the pre-RACT VOC content and not the current RACT neutral point for that type of coating. To effect this, additional mathematical terms must be added, one on the left and one on the right side of the formula. For example, if one can prove one used a high solids topcoat at 1.5 kg VOC/kg solids before 1993 (the year regulation negotiations began) and now thin the same product less so that it is consistently less than 1.5 kg/kg, one can enter it as a separate term. It appears in the formula below as "1.5(TU)" where "TU" stands for the total kilograms of solids of this unique topcoat used during an averaging day. "TU" appears on both sides of the inequality sign. ERu is the actual VOC content that was in this unique topcoat on a particular averaging day. Along with this, the meaning of the term (TCi) becomes slightly altered to mean the total topcoat solids used of every other topcoat beside the unique topcoat "U":

$$\sum_{i=1}^{n} 1.62(TC_i) + 1.5(TU) + 1.71(SE_i) + 8.1(WC_i) + 1.08(BC_i) + 0.712(ST_i) \geq$$
$$\sum_{i=1}^{n} ER_{TC_i}(TC_i) + ER_U(TU) + ER_{SE_i}(SE_i) + ER_{WC_i}(WC_i) + ER_{BC_i}(BC_i) + ER_{ST_i}(ST_i)$$

Similarly, any other unique coatings that meet such requirements and are used in averaging must each have its own set of two terms inserted into the averaging formula. Moreover, once a pre-RACT coating is used in averaging, the term for its VOC content must stay in the equation as long as that pre-RACT coating is used, even if one later needs to raise the VOC content of the pre-RACT coating to a level above its historical VOC content.

APPENDIX B – A SHORT-FORM OPTION

a. **Applicability:** This Appendix B to Rule 342 only applies to operators of facilities which have a permit or permit modification limiting VOC emissions from all wood furniture and millwork coating to less than 10 tons, and the permit or Control Officer states in writing that this Appendix B applies. For those facilities for which this Appendix B does apply, no provisions within Sections 301 through 501, inclusive, shall be used to substitute for provisions in this Appendix B. Facilities subject to this Appendix B are also subject to all of Sections 100, 200, and 502.

b. **Definitions:** For the purposes of this Appendix B, the following definition shall apply:

(1) **MINUS EXEMPT MATERIALS (MINUS EXEMPTS):** Means the same as "less water and non-precursor organic compounds" in specifying VOC content.

c. **VOC Limits for Topcoats and Sealers**

(1) **The Principal VOC Limits:** Meet either the lbs VOC/lb solids limit or the lbs VOC/gal, minus exempts, limit: **All sealers and topcoats**: **2 lbs VOC/lb** or **5.45 lb VOC/gal**

(2) **VOC Tradeoff Options:** These 2 options each require special conditions.

(a) **Low VOC topcoat with Higher VOC Sealer:**
Low VOC topcoat: 0.8 lb/lb OR 3.83 lb/gal limit for topcoat.
Higher VOC sealer: no VOC limit for sealer under such topcoat.

(b) **One-Step Finish:**
Higher VOC combination sealer and topcoat: **3 lb/lb** OR **6.0 lb/gal limit.**

The 2 Conditions:

I. A single wet application of either sealer or topcoat (not both)

II. Thickness of the dry finish cannot exceed 3 dry mils, as determined by the test method in subsection 502.3.

d. **Spray Method Requirements:**

(1) **Have Guns with Higher Transfer**: If you spray coating having over 1 lb VOC/lb you must use and have in evidence for an inspector at least one of the following onsite:

- Low pressure gun with less than 12 psig at tip. Examples: pure HVLP gun; a turbine gun.
- Airless; includes air-assisted airless.
- An electrostatic system.

(2) **Green Tag Option:** Restriction on conventional guns and other restricted use guns:

(a) **Green Tag Requirements:** A conventional air-atomized or other restricted use gun shall have a durable and visible green tag, sticker, or painted emblem, no less than 4 square inches in area on the gun or within 3 ft of the gun on the gun's hose, or the facility is in violation. *But,* such a tag is not required at a facility having and using only coatings which contain less than 1 lb VOC/lb solids as applied. Coatings which have less than 4.30 lb VOC/gal (515 g/l) minus exempt materials also meet this requirement.

(b) **Prohibition:** No coating over 1 lb VOC/lb solids may be applied with a conventional air-atomized or other restricted use gun. This prohibition includes, but is not limited to, traditional lacquers, washcoats, and low-solids stains. ("Conventional air-atomized gun" is defined in Section 208. "Restricted use gun" is defined in Section 225.)

(3) **Exemptions from VOC and Spray-Method Limits**: Prepackaged aerosol spray in cans under 22 fl. oz., faux & metal-leaf finish are exempt from Appendix B's subsections c.(1) and (2) and d.(1) and (2) as is any refinishing operation necessary for preservation, to return furniture to original condition, to replace missing furniture items to complete a matching set, or to produce custom replica furniture. But nothing exempted by the previous sentence is exempt from inventory of VOC emissions or from other provisions of this Appendix B.

e. **Housekeeping Functions:**

(1) **Keep Coatings, Cleaners, & Waste-Materials Covered:** Coatings and cleaners not in use, as well as waste coatings, cleaning materials including solvent-dipped rags, and solvent used to clean spray equipment must be collected into a closed container or a container which is closed immediately after receiving such material.

(2) **Booth Cleaning:** If booth/components other than *metal* filters are cleaned with solvent, no solvent which is more than 3.8 lb/VOC per gallon (455 g/l) shall be used. However, up to 1 gallon of solvent over 3.8 lb VOC/gal may be used for cleaning a booth as part of replacing coating on the booth.

f. **Records:** Keep a list of all VOC containing material with the name and amount of VOC in each: Express VOC content either as lb/lb or lb/gal. For topcoat and sealer contents which are expressed in lb VOC/gal, this must be minus water and non-precursors.

(1) **If you ever do your own Reducing or Thinning of a Sealer or Topcoat**: Keep a list of the maximum VOC content of any material after you thin it or add any additives at your facility.

(2) **Keep Receipts for 5 Years** of the amount received for each VOC-containing material *and* of the amount of all VOC-*waste materials* sent for recycling or hazardous waste collection.

(3) **What to Record and How often:** Record the amount in the following 4 categories, (a) to (d), noting either the amount "used" or the amount "received" since your last records update:

(a) All coatings including topcoats, sealers, stains, etc., including all parts, catalysts, activators, additives, hardeners; (*not* reducers). If you use conventional guns at all, total *separately* the coatings having less than 1 lb VOC/lb;

(b) All reducers and diluents to be used for reducing or diluting coatings (not cleaning);

(c) All solvents, strippers, thinners, and VOC-containing materials used for cleaning and cleanup (not reducing); and

(d) All other VOC containing materials connected with wood coating. Omit janitorial & building maintenance.

(e) **How often to Update your Records:** Update the above items in (a), (b), (c), and (d) weekly if your total monthly *use* of all coatings and diluents [(a) + (b)] is 250 gallons or more. Otherwise, update monthly. You may record just once a year those types of materials you use less than 15 gallons of.

Example: I use 5 kinds of graining ink. Added all together, I use 14 gallons of all graining ink combined: I only have to update my graining inks once a year.

APPENDIX C TO RULE 342

ALTERNATIVE COMPLIANCE WITH SECTION 301 VOC-LIMITS AND/OR SECTION 302 SPRAY-METHOD RESTRICTIONS BY USING AN EMISSIONS CONTROL DEVICE

a. **Eligibility:** A person is allowed to meet the VOC limits of either or both subsections 301.1 and 301.2 by using an ECS which reduces VOC emissions overall, including capture and processing, by at least 81 percent by weight. Such an ECS may also be used to comply with subsection 302.2 spray method provisions.

b. **Operation and Maintenance (O&M) Plan Required for ECS:**

(1) The owner or operator of an emission control system (ECS) used to meet the requirements of Section 301 of this rule shall provide the Control Officer with an Operation and Maintenance (O&M) Plan. This O&M Plan shall specify key system operating parameters, such as temperatures, pressures and/or flow rates, necessary to determine compliance with this rule, and describe in detail procedures and their frequency of implementation needed to maintain the ECS.

(2) The Control Officer's written approval of the O&M Plan is required. The owner or operator shall consistently implement all provisions of the O&M Plan.

(3) **Changes in Frequency:** Changes involving reduction in the frequency or extent of procedures or parameters in a Control Officer-approved O&M Plan shall have the written consent of the Control Officer prior to being implemented.

(4) **Other Changes:** An updated O&M Plan must be submitted to the Control Officer for review within 10 days of any changes not involving reduction in frequency or extent of procedures or parameters of an approved O&M Plan. Within five working days of a written disapproval of such changes, either the original O&M Plan shall be reinstituted or an alternative plan, negotiated with the affected facility and approved in writing by the Control Officer, shall be instituted.

c. **Providing and Maintaining ECS Monitoring Devices:** Any person operating an emission control system (ECS) pursuant to subsection 301.3 of this rule shall install, maintain, and calibrate monitoring devices described in the O&M Plan submitted to the Control Officer pursuant to subsection b. of this appendix. The monitoring devices shall measure temperatures, pressures, rates of flow, or other operating conditions necessary to determine if air pollution control equipment is functioning properly.

(1) **ECS Operation and Maintenance Records:** On each day that an ECS is used to comply with Section 301 of this rule, an owner or operator shall make a permanent record of the operating parameters of the key systems described in the O&M Plan. For each day or period in which the O&M Plan requires that maintenance be performed, a permanent record shall be made of the maintenance actions taken, within 24 hours of maintenance completion. An explanation shall be entered for scheduled maintenance that is not performed during the period designated in the O&M Plan.

(2) **Other Records Required when Complying Via ECS:** An owner or operator choosing to meet the requirements of Section 301 through the use of an ECS shall maintain, in addition to the monthly records required by subsection 501.2:

(a) Daily documentation showing the VOC content of the finishing material, as applied, in pounds VOC/pound solids when solvent or other VOC is added to the finishing material before application.

(b) Daily records showing the amount of coating, the amount of catalyst/hardener, and the amount of solvent, reducer, and/or diluent used.

d. **Compliance Schedule for ECS**: An owner or operator of a furniture coating facility shall have such facility in compliance per the following schedule. Total VOC emissions is the total VOC from all wood coating operations and associated cleaning processes. It includes millwork coating.

(1) **Sources Emitting 50 TPY:** Full compliance with all applicable requirements of this rule shall be by November 15, 1996, if such facility has applied for or received a Title V permit, its permit has a VOC-emissions limit of 50 tons or more, or which has had an aggregate VOC emission to atmosphere after December 31, 1989, of 50.0 tons (45.35 Mg) or more in any calendar year or 300 pounds (136 kg) or more in any day. In addition, an owner or operator shall provide the Control Officer with:

(a) Both proof of a binding contract for an ECS and a compliance plan by June 3, 1996, listing dates of completion of increments of progress toward meeting the requirements of subsection 301.3 of this rule.

(b) An O&M Plan for the ECS by November 15, 1996.

(2) **Other Sources:** A facility shall be in compliance with Section 302 by November 15, 1996 and with Section 301 by January 15, 1997 if its total VOC in each of the years 1990 through 1995 of less than 300 pounds (136 kg) in any day and 50.0 tons (45.35 MG) in any calendar year. In addition, the owner or operator shall provide the Control Officer with:

(a) Both proof of a binding contract for an ECS and a compliance plan by June 3, 1996, listing the dates of completing the increments of progress toward meeting the requirements of the subsection 301.3; and

(b) An O&M Plan for the ECS by January 2, 1997.

e. **Test Methods for an ECS**

(1) Control efficiency of an emission control device used to meet the requirements of Section 301 shall be determined according to EPA Reference Method 25 or an applicable submethod of Method 25 (Title 40, CFR Part 60, Appendix A).

(2) EPA Method 18 shall be used if specified by the Control Officer when a non-precursor organic compound is present in the input of a control device used to meet the requirement of Section 301.

(3) Capture efficiency of an emission control device used to meet the requirements of Section 301 shall be determined by mass balance in combination with ventilation/draft rate determinations done in accordance with subsection e.(4), following, or according to "Guidelines for Determining Capture Efficiency" January 9, 1995, Candace Sorrell, Source Characterization Group A, Office of Air Quality Planning and Standards, US EPA. This EPA document is available at the Maricopa County Air Quality Department, 1001 N. Central Ave., Phoenix, Arizona, 85004.

(4) Ventilation/draft rates of an emission control device used to meet the requirements of Section 301 shall be determined by EPA Methods 2, 2A, 2C, or 2D.

REGULATION III – CONTROL OF AIR CONTAMINANTS

RULE 343
COMMERCIAL BREAD BAKERIES

INDEX

SECTION 100 – GENERAL

101 PURPOSE

102 APPLICABILITY

SECTION 200 – DEFINITIONS

201 AFFECTED FACILITY

202 APPROVED EMISSION CONTROL SYSTEM

203 AVERAGE DAILY EMISSIONS

204 BASE YEAR

205 BREAD

206 CONTROL PLAN

207 EXISTING OVEN

208 LEAVEN

209 NEW OVEN

210 OVEN

211 PROOF BOXES

SECTION 300 – STANDARDS

301 LIMITATIONS–EXISTING BAKERY OVENS

302 LIMITATIONS–NEW OR MODIFIED BAKERY OVENS

303 OPERATION AND MAINTENANCE (O&M) PLAN

SECTION 400 – ADMINISTRATIVE REQUIREMENTS

401 COMPLIANCE SCHEDULE

402 INFORMATION REQUIRED TO BE INCLUDED IN AN EMISSION CONTROL PLAN

403 EFFECTIVE DATE

SECTION 500 – MONITORING AND RECORDS

501 PROVIDING AND MAINTAINING MONITORING DEVICES

502 RECORDKEEPING AND REPORTING

503 RECORDS RETENTION

504 COMPLIANCE DETERMINATION–TEST METHODS

Adopted 02/15/95
Revised 09/25/13

MARICOPA COUNTY
AIR POLLUTION CONTROL REGULATIONS

REGULATION III – CONTROL OF AIR CONTAMINANTS
RULE 343
COMMERCIAL BREAD BAKERIES

SECTION 100 – GENERAL

101 **PURPOSE:** To limit the emission of volatile organic compounds (VOCs) from bread ovens at commercial bread bakeries.

102 **APPLICABILITY:** The provisions of this rule shall apply only to commercial bread bakeries whose total VOC emissions exceed 25 tons per year after December 31, 1989. This rule shall not apply to any facility or equipment used exclusively for the production of bakery products leavened chemically in the absence of yeast.

SECTION 200 – DEFINITIONS: For the purpose of this rule, the following definitions shall apply, in addition to those definitions found in Rule 100 (General Provisions and Definitions) of these rules. In the event of any inconsistency between any of the Maricopa County air pollution control rules, the definitions in this rule take precedence.

201 **AFFECTED FACILITY:** With reference to a stationary source, any apparatus to which a standard is applicable.

202 **APPROVED EMISSION CONTROL SYSTEM:** A system for reducing emissions of organic compounds, consisting of both collection and control devices which are approved in writing by the Control Officer and are designed and operated in accordance with good engineering practice.

203 **AVERAGE DAILY EMISSIONS:** The product of the total calendar year emissions divided by the number of days the oven was employed for production during that year.

204 **BASE YEAR:** The calendar year 1990 or any subsequent calendar year in which the average daily emissions equal or exceed 192 lbs. or more per day.

205 **BREAD:** A perishable foodstuff prepared from yeast-leavened dough whose primary ingredients are flour, water, and yeast which is baked into loaves, buns, or rolls.

206 **CONTROL PLAN:** A written report describing the method to be used to achieve full compliance. The control plan shall, at a minimum, contain all information required in Section 402 of this rule.

207 **EXISTING OVEN:** Any oven which was installed before May 1, 1995.

208 **LEAVEN:** To raise a dough by causing gas to thoroughly permeate it through the use of a fermentation-producing agent such as yeast or baking powder.

209 **NEW OVEN:** Any oven which was installed on or after May 1, 1995.

210 **OVEN:** A chamber used to bake by means of heat, typically from the combustion of natural gas or propane. This does not include proof boxes.

211 **PROOF BOXES:** A warm, typically 100° Fahrenheit, humid chamber where yeast leavened dough is allowed to rise to the volume desired for baking.

SECTION 300 – STANDARDS

301 **LIMITATIONS–EXISTING BAKERY OVENS:** On or after November 15, 1995, no person shall use an existing oven, with annual VOC emissions of 25 tons and/or a base year average daily VOC emissions of greater than 192 lbs., unless the VOC emissions from the oven are reduced by at least 81 percent. This may be accomplished through the use of an approved emission control device or bread-making and/or baking process changes.

302 **LIMITATIONS–NEW OR MODIFIED BAKERY OVENS:** No person shall operate a new or modified oven with potential, annual VOC emissions of 25 tons and/or average daily VOC emissions of 192 lbs., unless the VOC emissions from the oven are reduced by at least 81 percent. This may be accomplished through the use of an approved emission control device or bread-making and/or baking process changes. A person choosing to comply with this rule through the use of bakery process changes shall use a VOC E.F. value of 5.5 pounds per ton (Reference Figure 1.)

303 **OPERATION AND MAINTENANCE (O&M) PLAN:** The owners or operators of an approved emission control system used to meet the requirements of this rule shall provide the Control Officer with an O&M Plan. This Plan shall specify key system operating parameters, such as temperatures, pressures and/or flow rates, necessary to determine compliance with this rule and describe in detail procedures to maintain the approved emission control system. The Control Officer's written approval of this Plan and the implementation of this Plan shall be required for compliance with this rule to be achieved.

SECTION 400 – ADMINISTRATIVE REQUIREMENTS

401 **COMPLIANCE SCHEDULE:**

401.2 By May 1, 1995, any person subject to Section 301 shall submit for the Control Officer's approval an emission control plan describing the method to be used to achieve full compliance by November 15, 1995. The plan shall, at a minimum, include all information required in Section 402 of this rule. The Control Officer may require a person submitting such emission control plan to submit subsequent reports on progress in achieving compliance.

402 INFORMATION REQUIRED TO BE INCLUDED IN AN EMISSION CONTROL PLAN:

402.1 Name(s), address(es), and phone number(s) of the owner of the bakery, of person(s) responsible for the preparation, submittal and implementation of the emission control plan and of person(s) responsible for the baking operations; and

402.2 Complete and accurate calculations of the bakery's base year total VOC emissions from each affected oven by following emissions inventory calculations provided by the equation in Figure 1; and

402.3 Complete and accurate calculations of the bakery's total VOC emissions from each affected oven after the proposed breadmaking and/or baking process changes found in the emission control plan. These calculations shall be done by following the emissions inventory estimation provided by the equation in Figure 1. The emission control plan shall demonstrate that the reduction in emissions is a result of the breadmaking and/or proposed baking process changes' effect on the variables in the equation in Figure 1; or

402.4 Complete and accurate calculations of the bakery's total VOC emissions from each affected oven based on the proposed emission control system described in the emission control plan. The emission control plan shall also specify dates for completing increments of progress, such as the contractual arrival date of new control equipment.

403 EFFECTIVE DATE: The provisions of this rule shall become effective on May 1, 1995.

SECTION 500 -MONITORING AND RECORDS

501 PROVIDING AND MAINTAINING MONITORING DEVICES: Any person operating an approved emission control system pursuant to this rule shall properly install and maintain in calibration, in good working order and in operation, devices described in an approved O&M Plan for indicating temperatures, pressures, rates of flow, or other operating conditions necessary to determine if air pollution control equipment is functioning properly and is properly maintained.

502 RECORDKEEPING AND REPORTING: Any person subject to this rule shall maintain records which comply with the following requirements. Any records required by this rule shall be kept in a legible, consistent and complete manner.

502.1 Records for operation and maintenance of an approved emission control system shall include a record of the times an approved emission control system is operating, daily records of the O&M Plan's key system operating parameters and a log of all maintenance performed according to the O&M Plan.

502.2 Records for the institution shall include:

a. Formula number;

b. Initial baker's percent of yeast, Yi (nearest one-tenth of a percent);

c. Total ferment time (in hours, nearest one-tenth of an hour - begins with first mixing of yeast with the dough or sponge);

d. Yeast spike as baker's percent of yeast (nearest one-tenth of a percent);

e. Spike time (in hours, nearest one-tenth of an hour);

f. Ethanol emission factor (lbs/ton);

g. Daily records of production (tons) and corresponding formula;

h. Quarterly records of ethanol emissions (tons).

503 **RECORDS RETENTION:** Copies of control plans, operation and maintenance records and any other documentation required by this rule shall be retained by the permittee for at least three years.

504 **COMPLIANCE DETERMINATION – TEST METHODS:** When more than one test method is permitted for a determination, an exceedance of the limits established in the rule determined by any of the applicable test methods constitutes a violation of this rule.

504.1 Measurements of VOC emissions subject to Section 301 and 302 of this rule shall be conducted in accordance with EPA Methods 18 and/or 25 and/or its submethods (40 CFR 60, Appendix A).

504.2 Ventilation/draft rates shall be determined by EPA Methods 2, 2a, 2c, and 2d. Figure 1

Figure 1

$$\text{VOC E.F.} = .95Yi + .195ti - .51S - .86ts + 1.90$$

Where

VOC E.F. = pounds of VOC per ton of baked bread
Yi = initial baker's percent of yeast to the nearest tenth of a percent
Ti = total yeast action time in hours to the nearest tenth of an hour
S = final (spike) baker's percent of yeast to the nearest tenth of a percent
ts = spiking time in hours to the nearest tenth of an hour

REGULATION III – CONTROL OF AIR CONTAMINANTS

RULE 344
AUTOMOTIVE WINDSHIELD WASHER FLUID

INDEX

SECTION 100 – GENERAL

101 PURPOSE

102 APPLICABILITY

SECTION 200 – DEFINITIONS

201 AUTOMOTIVE WINDSHIELD WASHER FLUID (WINDSHIELD FLUID)

202 LABEL

203 PERCENT BY WEIGHT

SECTION 300 – STANDARDS

301 LIMITATIONS–PERCENT VOC BY WEIGHT

302 EXEMPTION–CONCENTRATED WINDSHIELD FLUID PRODUCTS

303 EXEMPTION–OUTSIDE OF MARICOPA COUNTY

SECTION 400 – ADMINISTRATIVE REQUIREMENTS (NOT APPLICABLE)

SECTION 500 – MONITORING AND RECORDS

501 COMPLIANCE DETERMINATION

APPENDIX TO RULE 344 APPENDIX A

Adopted 02/15/95
Revised 04/03/96
Revised 04/07/99
Revised 09/25/13

MARICOPA COUNTY
AIR POLLUTION CONTROL REGULATIONS

REGULATION III – CONTROL OF AIR CONTAMINANTS

RULE 344
AUTOMOTIVE WINDSHIELD WASHER FLUID

SECTION 100 – GENERAL

101 **PURPOSE:** To limit the emission of volatile organic compounds (VOCs) into the ambient air from automotive windshield washer fluid products.

102 **APPLICABILITY:** This rule applies to any automotive windshield washer fluid product sold or otherwise distributed within Maricopa County.

SECTION 200 – DEFINITIONS: For the purpose of this rule, the following definitions shall apply, in addition to those definitions found in Rule 100 (General Provisions and Definitions) of these rules. In the event of any inconsistency between any of the Maricopa County air pollution control rules, the definitions in this rule take precedence.

201 **AUTOMOTIVE WINDSHIELD WASHER FLUID (WINDSHIELD FLUID):** Any liquid designed for use in a motor vehicle windshield washer fluid system either as an antifreeze or for the purpose of cleaning, washing, or wetting windshield(s), except any such liquid which is placed in a new motor vehicle at the time the vehicle is manufactured.

202 **LABEL:** Any written, printed, or graphic matter affixed to, applied to, blown into, formed, molded into, embossed on, or appearing upon any product container or package, for purposes of branding, identifying, or giving information with respect to the product or the contents of the package.

203 **PERCENT BY WEIGHT:** The total weight of a substance expressed as a percentage of the net weight of the product exclusive of the container or package as calculated according to the following equation:

$$Percent\ by\ Weight\ = \frac{B\ x\ 100}{A}$$

Where:

A = net weight of unit (excluding container and packaging)

B = weight of VOCs, as defined in Section 205 of this rule

SECTION 300 – STANDARDS

301 LIMITATIONS–PERCENT VOC BY WEIGHT: No person shall sell, offer for sale, or supply in Maricopa County, Arizona any automotive windshield washer fluid product which, at the time of sale, offering, or supply, contains VOCs in excess of ten percent by weight, unless the person can demonstrate that the windshield fluid meets the exemption in Section 302, or the fluid is destined for use outside Maricopa County, as provided for by the exemption in Section 303.

302 EXEMPTION–CONCENTRATED WINDSHIELD FLUID PRODUCTS: A concentrated windshield fluid (concentrate) is exempt from Section 301 of this rule if the label provides all of the following information:

a. That the windshield washer fluid is a concentrate;

b. That the contents must be diluted prior to use;

c. Specific, clearly designated dilution directions;

d. That the freezing point of the undiluted product is not described on the label; and

e. That the dilution ratio of the concentrate shall yield a solution that never exceeds ten percent VOC by weight.

303 EXEMPTION–OUTSIDE OF MARICOPA COUNTY: A person may demonstrate that windshield fluid sold, offered for sale or supplied within Maricopa County is destined for use outside Maricopa County by providing the following documents or information:

a. A bill of lading, or

b. A properly executed, signed transfer agreement, such as a warehouse receipt, orders for the delivery of goods, and any other documents common in such transactions which in the regular course of business or financing are treated as adequately evidencing that the person in possession of it is entitled to receive, hold and dispose of the document and the goods it covers.

SECTION 400 – ADMINISTRATIVE REQUIREMENTS (NOT APPLICABLE)

SECTION 500 – MONITORING AND RECORDS

501 COMPLIANCE DETERMINATION: Compliance determination may be demonstrated by either one of the options listed below. Copies of the test method listed in subsection 501.2 and found in Appendix A are available at the Maricopa County Air Quality Department, 1001 N. Central Ave., Phoenix, AZ, 85004.

501.1 Formulation data based upon written certification from the manufacturer specifying the actual weight percentage of VOCs in the windshield washer fluid.

501.2 Test Method: Maricopa County Reference Method #100, which is entitled: "Total Organic Carbon for Windshield Washer Fluids," as found in Appendix A of this rule.

502 CONTESTED RESULTS: The Control Officer may direct the owner or operator to perform the testing method listed in subsection 501.2 if there is reason to believe that the formulation information is incorrect. If there is an inconsistency between the formulation certification and the actual test method results, the test method shall prevail as the definitive method in all cases.

APPENDIX A

Test Method #100 for Determining Total Organic Carbon for Windshield Washer Fluids

1.0 APPLICABILITY AND PRINCIPLE

1.1 Applicability. This method is applicable for the determination of organic carbon in diluted windshield washer fluids.

1.2 Principle. Organic carbon in a sample is converted to carbon dioxide (CO2) by catalytic combustion or wet chemical oxidation. The CO2 formed can be measured directly by an infrared detector or converted to methane (CH4) and measured by a flame ionization detector. The amount of CO2 or CH4 is directly proportional to the concentration of carbonaceous material in the sample.

2.0 SENSITIVITY AND INTERFERENCES

2.1 Sensitivity. The method is most applicable to measurement of organic carbon above 1mg/L.

2.2 Interferences. All distilled water used in making and/or diluting the samples must be acidified with concentrated phosphoric acid H3PO4 (1 mL of H3PO4/1 L of water) and purged with inert gas (He, N2...) for at least 30 minutes. Inject this water into the Total Organic Carbon analyzer and determine the total concentration (ppm C) of the blank. This method is sufficient for removing most interferences due to inorganic carbon in the water. Do not purge the sample with an inert gas since purging may result in the loss of volatile organic substances.

3.0 APPARATUS

3.1 Blender. Waring-type or similar, for blending or homogenizing samples.

3.2 Total Organic Analyzer. An analyzer capable of measuring carbonaceous material in liquid samples. Consideration should be given to the types of samples to be analyzed, the expected concentration range, and forms of carbon to be measured.

3.3 Volumetric Flasks and Volumetric Pipets. For preparing standard solutions and the windshield washer fluid solutions.

3.4 Glass Bottles. For sample collection and storage.

4.0 REAGENTS

4.1 Water (H_2O). Distilled water used in preparation of standards and for dilution of samples should be ultra-pure to reduce the carbon concentration of the blank. Carbon dioxide-free, double distilled water is recommended. Ion exchanged waters are not recommended because of the possibilities of contamination with organic materials from the resins.

4.2 **Potassium Hydrogen Phthalate ($HOOCC_6H_4COOK$), Stock Solution.** 1000 mg carbon/L. Dissolve 0.2128g of potassium hydrogen phthalate (Primary Standard Grade) in distilled water and dilute to 100.0 mL.

4.3 **Potassium Hydrogen Phthalate, Standard Solutions.** Prepare standard solutions from the stock solution by dilution with distilled water.

4.4 **Blank Solution.** Use the same distilled water (or similar quality water) used for the preparation of the standard solutions.

5.0 SAMPLE PREPARATION

5.1 Prepare the windshield washer fluid according to the manufacturer's directions.

5.2 Dilute the windshield washer fluids with H_2O to be within the calibrated range of the instrument before analyzing. Dilutions of 1 to 100 or greater may be necessary before windshield washer solutions can be analyzed.

6.0 PROCEDURE

6.1 Follow instrument manufacturer's instructions for calibration, procedure, and calculations.

6.2 Calibrate using at least 3 standards. The set of calibration standards should consist of one below the expected concentration, one above the expected concentration, and approximately at the expected concentration.

6.3 Calculate and report the results as mg C/g sample.

8.0 **BIBLIOGRAPHY OF REFERENCE DOCUMENTS:** The Control Officer will rely on the following background materials when questions arise in the review and implementation of the test method listed in subsection 501.2:

1. Annual Book of ASTM Standards, Part 31, "Water", Standard D 2574-79, p 469, (1976).

2. Standard Methods for the Examination of Water and Wastewater, 14th Edition, p 532, Method 505, (1975).

3. Method 415.1, Methods for Chemical Analysis of Water and Wastes, Environmental Monitoring and Support Laboratory, USEPA, Cincinnati, OH 45268, EPA 600/4-79-020.

4. Evaluation of Method 415.1 for Off-set Lithographic Solutions, September, 1992.

REGULATION III – CONTROL OF AIR CONTAMINANTS

RULE 345
VEHICLE AND MOBILE EQUIPMENT COATING

INDEX

SECTION 100 – GENERAL

101 PURPOSE

102 APPLICABILITY

SECTION 200 – DEFINITIONS

201 AUTOMATIC GUN-CLEANING MACHINE (GUN CLEANER)

202 AUTOMOBILE/LIGHT DUTY VEHICLE

203 COATING AS APPLIED

204 CONVENTIONAL AIR ATOMIZED SPRAY (SYSTEM)

205 DAY

206 DEPARTMENT

207 DETAILING GUNS AND TOUCH-UP GUNS

208 DILUENT

209 ELECTROSTATIC APPLICATION

210 EMISSION CONTROL SYSTEM (ECS)

211 ENAMEL

212 FLEXIBLE PLASTIC

213 HARDENER

214 HEAVY TRUCK

215 HEAVY DUTY VEHICLE

216 HIGH-VOLUME LOW PRESSURE (HVLP) APPLICATION

217 LACQUER

218 LOW PRESSURE GUN

219 MIXING INSTRUCTIONS

220 MOBILE EQUIPMENT

221 MULTI-COLORED TOPCOAT

222 PRETREATMENT WASH PRIMER

223 PRIMER

224 PRIMER-SEALER

225 PRIMER-SURFACER

226 REDUCER

227 REFINISH, REFINISHING

228 SINGLE-STAGE TOPCOAT

229 SPECIALTY COATING

230 SPOT REPAIR ON A HEAVY TRUCK

231 SURFACE PREPARATION AND SURFACE CLEANING FLUIDS

232 STRIPPERS

233 THINNER

234 THREE-STAGE TOPCOAT

235 TOPCOAT

236 TOUCH UP COATING

237 TWO-STAGE TOPCOAT

238 VEHICLE REFINISHING COATING COMPONENT

239 VEHICLE REFINISHING OPERATION

240 VOC CONTENT

SECTION 300 – STANDARDS

301 LIMITATIONS: VOC CONTENT OF REFINISH COATINGS FOR LIGHT DUTY VEHICLES

302 REFINISHING HEAVY DUTY TRUCKS AND TRUCK-TRAILERS

303 COATING NEW SURFACES & REFINISHING HEAVY VEHICLES

304 MIXING REQUIREMENTS

305 PREPARATION AND SURFACE-CLEANING FLUIDS

306 MAINTENANCE

307 PAINT GUN REQUIREMENTS AND LIMITS

308 EMISSION CONTROL SYSTEM

309 CLEANUP AND CLEANING SUPPLY AND APPLICATION EQUIPMENT

310 GUN CLEANING MACHINES

311 STORAGE AND DISPOSAL OF VOC AND VOC-CONTAINING MATERIAL

312 EXEMPTIONS

SECTION 400 – ADMINISTRATIVE REQUIREMENTS

401 ECS SCHEDULE

402 THE RESPONSIBILITIES OF LARGE USERS

403 JOBBERS/SUPPLIERS RECORDKEEPING RESPONSIBILITY FOR REFINISHES

404 WEIGHT EXCLUSION

SECTION 500 – MONITORING AND RECORDS

501 RECORDKEEPING AND REPORTING

502 COMPLIANCE DETERMINATION

503 FORMULAS

504 EMISSION CONTROL SYSTEM (ECS) AND RELATED SYSTEM OPERATING REQUIREMENTS

505 TEST METHODS ADOPTED BY REFERENCE

Adopted 02/15/95
Revised 11/20/96
Revised 04/21/99
Revised 09/25/13

MARICOPA COUNTY
AIR POLLUTION CONTROL REGULATIONS

REGULATION III – CONTROL OF AIR CONTAMINANTS

RULE 345
VEHICLE AND MOBILE EQUIPMENT COATING

SECTION 100 – GENERAL

101 PURPOSE: To limit emissions of volatile organic compounds (VOCs) from the surface preparation and coating of highway vehicles and mobile equipment.

102 APPLICABILITY:

102.1 The provisions of this rule apply to the coating of any vehicle or mobile equipment able to travel or be drawn upon a highway, except for Original Equipment coatings at light-duty vehicle manufacturing plants. A summary is provided by the following directory:

DIRECTORY OF THE REGULATIONS THAT APPLY TO NEW FINISHES & TO REFINISHES

Type of Vehicle ♊	**Applicable Regulation for Original Equipment Coating and Coating on Never-Coated Surface** ♊	**Applicable Regulation for Refinishing** ♊
Car, pickup, minivan, & light-duty utility vehicle, or their chassis, produced on large assembly lines; i.e., included by code #33611 in NAICS, as incorporated by reference in subsection 505.3.	New Source Performance Standard for cars & light-duty vehicles made on assembly lines, subpart MM, 40 CFR 60, as incorporated by reference in Rule 360.	Table 1 (of this rule) (vehicle bodies, cabs, and chassis only)
Car, pickup, minivan, or light-duty utility vehicle NOT produced on large assembly lines; all motorcycles and golf-carts.	Table 3 (of this rule)	Table 1 (vehicle bodies, cabs, and chassis only)
All vehicles that qualify as "heavy trucks", as defined by §215 of this rule, (buses, large trucks, tractor/trailers, etc.)	Table 3	Table 2 (of this rule) (vehicle bodies, cabs, chassis & their trailers)
All heavy duty vehicles that do not qualify as "heavy trucks", and all mobile equipment	Table 3	Table 3 except for pretreatment wash
*Small never coated surfaces on a coated vehicle being refinished are subject to Table 2 or §302.3.		

102.2 Non-Applicability:

a. This rule does not apply to materials that contain 2.0% or less VOC by either weight or volume, or have less than 0.17 lbs VOC per gallon (20 g/liter) material VOC content, as determined by the formula in subsection 503.3.

b. This rule does not apply to the coating of separate vehicle parts or mobile equipment parts that have never been installed since manufacture or remanufacture, unless they are current replacements for a defective/missing body part and are being coated in the course of refinishing the vehicle body they will become part of.

102.3 NSPS & NESHAP: In addition to this rule, facilities may be subject to New Source Performance Standards (NSPS) in Rule 360 and/or to National Emission Standards for Hazardous Air Pollutants (NESHAP) in Rule 370 of these Rules and Regulations.

SECTION 200 – DEFINITIONS: For the purpose of this rule, the following definitions shall apply, in addition to those definitions found in Rule 100 (General Provisions and Definitions) of these rules. In the event of any inconsistency between any of the Maricopa County air pollution control rules, the definitions in this rule take precedence.

201 AUTOMATIC GUN-CLEANING MACHINE (GUN CLEANER): A machine which, after being loaded, cleans paint spray-guns without the assistance of a person.

202 AUTOMOBILE/LIGHT DUTY VEHICLE: A vehicle manufactured by a facility that is designated by code 33611 of the 1997 North American Industrial Classification System (NAICS), as incorporated by reference in subsection 505.3. This comprises only vehicles manufactured by a large production-line facility that makes the following complete vehicles or chassis [for such vehicles]: automobile, light duty van, light duty motor home, pick-up truck, and/or utility vehicle.

203 COATING AS APPLIED: Refers to coating at the time immediately prior to its application, including any final addition of solvent to the coating before such coating is applied.

204 CONVENTIONAL AIR ATOMIZED SPRAY (SYSTEM): A spray which is atomized with air in a system designed to exceed 25 psig (1.7 bar) at the center of the spray-gun tip and which is not used with an electrostatic transfer system.

205 DAY: A period of 24 consecutive hours beginning at midnight.

206 DEPARTMENT: The Maricopa County Air Quality Department.

207 DETAILING GUNS AND TOUCH-UP GUNS: Small air spray devices, including air brushes, that operate at no greater than 6 cfm (170 liters per minute) air flow and no greater than 50 psig (3.4 bar) air pressure and are used to coat small areas.

208 **DILUENT:** For the purposes of this rule, any fluid in or added to a coating such as thinner, retarder, reducer, solvent, or drying accelerator which solubilizes, adjusts concentration, viscosity, flow, or drying rates and which evaporates as the coating film solidifies and cures.

209 **ELECTROSTATIC APPLICATION:** A method of applying coating by electrically charging coating droplets or particles with an electrical device, causing their deposition onto a substrate by electrostatic attraction.

210 **EMISSION CONTROL SYSTEM (ECS):** A system, approved in writing by the Control Officer, designed and operated in accordance with good engineering practice to reduce emissions of volatile organic compounds. Such system consists of an emissions collection subsystem and an emissions processing subsystem.

211 **ENAMEL:** Any non-lacquer topcoat.

212 **FLEXIBLE PLASTIC:** A surface or part made of solid (non-rubber) polymer designed to withstand significant deformation without damaging it for its intended use.

213 **HARDENER:** A coating component specifically designed to promote a faster cure of an enamel finish.

214 **HEAVY TRUCK:** Any cab/tractor, truck, van, bus, or motorhome with a manufacturer's gross vehicle weight rating of 8600 lbs or more that is licensable for highway travel; this includes any trailer or semi-trailer that is equipped to be pulled by any such cab/tractor, truck, or van.

215 **HEAVY DUTY VEHICLE:** Any highway vehicle, except for an automobile/light-duty vehicle as defined in Section 202. This includes, but is not limited to, all vehicular products manufactured under NAICS code 3362, such as trailers, buses, canopies, and the following: trucks, construction equipment, and recreational vehicles.

216 **HIGH-VOLUME LOW PRESSURE (HVLP) APPLICATION:** A type of coating spray system in which the final air pressure does not exceed 10 psig (67 kilopascals) and which depends on relatively large volumes of air to atomize the coating.

217 **LACQUER:** A coating which becomes or remains soft when subjected to heat (thermoplastic), which dries primarily by solvent evaporation, and which is resoluble in its original solvent.

218 **LOW PRESSURE GUN:** An air atomized spray gun which by design functions best at tip pressures below 10 psig (0.7 bar), measured according to subsection 502.4, and for which the manufacturer makes no written claims that the gun can be used effectively above 12 psig (0.8 bar).

219 **MIXING INSTRUCTIONS:** The coating or coating component manufacturer's or importer's specification of the quantities of coating components for mixing a coating.

220 **MOBILE EQUIPMENT:** Any equipment that is physically capable of being driven or drawn upon a highway including, but not limited to, the following types of equipment: construction vehicles (such as mobile cranes, bulldozers, concrete mixers); farming equipment (such as wheel tractor, plow, pesticide sprayer); hauling equipment (such as truck trailers, utility bodies, camper shells); and miscellaneous equipment (such as street cleaners, golf carts, all-terrain vehicles {ATVs}, mopeds) etc.

221 **MULTI-COLORED TOPCOAT:** A topcoat that exhibits more than one color, is packaged in a single container, and camouflages surface defects on areas of heavy use, such as cargo beds and other surfaces of trucks and other utility vehicles.

222 **PRETREATMENT WASH PRIMER:** A primer that contains a minimum of 0.5 percent acid by weight that is applied directly to bare metal surfaces to provide corrosion resistance and to promote adhesion of subsequent coatings.

223 **PRIMER:** Any coating applied prior to the application of a topcoat for the purpose of corrosion resistance and/or adhesion.

224 **PRIMER-SEALER:** Any coating applied prior to the application of a topcoat for the purpose of corrosion resistance, adhesion of the topcoat, and/or color uniformity and to promote the ability of an undercoat to resist penetration by the topcoat.

225 **PRIMER-SURFACER:** Any coating applied prior to the application of a topcoat for the purpose of filling surface imperfections in the substrate, corrosion resistance, and/or adhesion of the topcoat.

226 **REDUCER:** Any solvent used to thin enamels.

227 **REFINISH, REFINISHING:** Recoating previously paint-finished parts of a motorcycle or of the body of an automobile/light duty vehicle. The body does not include mechanical parts or chassis, except as they are incorporated into the surface of the body, such as a motor-driven mirror assembly and coated underbody.

228 **SINGLE-STAGE TOPCOAT:** A topcoat consisting of only a single coating formulation applied in one or more coats.

229 **SPECIALTY COATING:** Any coating that is specifically designated by the coating manufacturer as being one or more of the following:

229.1 **Adhesion Promoter:** A coating designed to facilitate the bonding of a primer or topcoat on surfaces such as trim moldings, door locks, and door sills, where sanding is impracticable, and on plastic parts and the edges of sanded areas.

229.2 Bright Metal Trim Repair Coating: A coating applied directly to chrome plated or other bright metal surface(s) to attain a desired appearance.

229.3 Cut-In, or Jambing, Clearcoat: A fast-drying, ready-to-spray clearcoat applied to surfaces such as door jambs and trunk and hood edges to allow for quick closure.

229.4 Elastomeric Coating: A coating designed for application over flexible parts, such as elastomeric bumpers.

229.5 Impact-Resistant Coating: A specialty coating used on the lower 12 inches (31.6 cm) of a quarter-panel, door, or fender to resist chipping caused by road debris.

229.6 Low-Gloss Coating: A coating which exhibits a gloss reading less than or equal to 25 on a 60° glossmeter.

229.7 Radar Dispersing Coating: A coating designed to disperse radar signals, applied to any part of a military vehicle or military mobile equipment.

229.8 Underbody Coating: A coating designed for protection and sound deadening that is typically applied to the wheel wells and underbody of an automobile.

229.9 Uniform Finish Blenders: Any coating that is applied in a spot repair for the purpose of blending a paint overspray ("feathered") area of a repaired topcoat to match the appearance of an adjacent existing topcoat.

229.10 Water Hold-Out Coating: A coating applied to the interior cavity areas of doors, quarter panels and rocker panels for the purpose of corrosion resistance to prolonged water exposure.

229.11 Weld-Through Primer: A primer that is applied to an area before welding is performed, and that provides corrosion resistance to the surface after welding has been performed.

230 SPOT REPAIR ON A HEAVY TRUCK: A repair of a damaged or uncoated area of a heavy truck in which not more than a total of 1 liter (1.1 quart) of topcoat(s) and a total of 1 liter primers are used; and such coatings are applied from a reservoir that can hold no more than 1.2 liters when completely full.

231 SURFACE PREPARATION AND SURFACE CLEANING FLUIDS: Fluids that are used to prepare a surface for further operations by aiding the removal of grime, greases, waxes, unwanted deposits and embedded particles from the surface.

232 STRIPPERS: Powerful solvents used to dissolve permanent, cured coatings, usually to attain a bare substrate.

233 THINNER: Any solvent used to reduce the viscosity or solids content of a coating.

234 **THREE-STAGE TOPCOAT:** A topcoat composed of a pigmented basecoat, a midcoat, and a transparent clearcoat.

235 **TOPCOAT:** Any coating or series of coatings applied over a primer or an existing finish for the purpose of protection or beautification.

236 **TOUCH UP COATING:** A coating applied by brush, air-brush, or nonrefillable aerosol can to cover minor surface damage.

237 **TWO-STAGE TOPCOAT:** A topcoat consisting of a pigmented basecoat and a transparent clearcoat.

238 **VEHICLE REFINISH COATING COMPONENT:** Any portion of a coating, such as a reducer or thinner, hardener, additive, etc., recommended (by its manufacturer or importer) to distributors or end-users for vehicle refinishing. The raw materials (such as polyurethane resin, etc.) used to produce the components that are mixed by the end user to prepare a coating for application are not considered vehicle refinish coating components.

239 **VEHICLE REFINISHING OPERATION:** For the purposes of this rule, any coating of vehicles or mobile equipment, their parts and components, including partial body collision repairs, for the purpose of protection, restoration or beautification, and which is subsequent to the original coating applied at a coating assembly line at an Original Equipment Manufacturing (OEM) plant.

240 **VOC CONTENT:** See subsections 503.2 and 503.3.

SECTION 300 – STANDARDS

301 LIMITATIONS: VOC CONTENT OF REFINISH COATINGS FOR LIGHT DUTY VEHICLES:

301.1 No person shall sell for use, supply for use, or apply, coating on a previously finished automobile/light-duty vehicle in Maricopa County unless the coating's VOC content complies with the applicable limits in Table 1.

a. VOC content is determined according to Sections 502, 503.2, and 505.

b. Compliance will be determined based on the VOC content limit, as expressed in metric units. (English units {lbs VOC/gal} are provided for information only.)

TABLE 1
REFINISHES APPLIED TO THE BODIES OF AUTOMOBILE/LIGHT-DUTY VEHICLES OR MOTORCYCLES
VOC LIMITS FOR REFINISH COATINGS AS APPLIED, MINUS EXEMPT COMPOUNDS

Coating category	Grams VOC per liter	Pounds VOC per gal
Pretreatment wash primers	780	6.5

Coating category	Grams VOC per liter	Pounds VOC per gal
Primers/primer surfacers	580	4.8
Primer sealers	550	4.6
Single/two-stage topcoats	600	5.0
Topcoats of more than two stages	630	5.2
Multi-colored topcoats	680	5.7
Specialty coatings	840	7.0
Strippable booth coatings	420	3.5

301.2 Refinishing Surfaces that are Not Part of Body/Chassis: The recoating of a section of a light-duty vehicle that is not part of its body/chassis, its body's appurtenances, nor its wheels, shall comply with the VOC limits of Table 3. This includes drive-train, steering gear, suspension, etc.

301.3 Refinishing Replacement Appurtenances on the Vehicle Body: Vehicle-body appurtenances such as mirrors, trim strips, license-plate frames, etc., used to replace or supplement existing appurtenances on an automobile/light-duty vehicle bodies may be coated with coatings that meet the applicable VOC limits in Table 1, even if the item has never been coated or used.

302 REFINISHING HEAVY DUTY TRUCKS AND TRUCK-TRAILERS:

302.1 Refinish VOC Limits: No person shall apply refinish coating to any section or appurtenance of the body or chassis of a heavy truck unless that coating complies with the VOC limits in Table 2.

a. VOC content is determined according to Sections 502, 503.2, and 505.

b. Compliance will be determined based on the VOC content limit, as expressed in metric units. (English units {lbs VOC/gal} are provided for information only.)

TABLE 2

VOC LIMITS FOR REFINISH COATING AS APPLIED TO HEAVY TRUCK BODIES

VOC LIMIT and Effective Date	Current	November 1, 1999	November 1, 2000	November 1, 2001	
TYPE OF COATING					**ROW**
Pretreatment wash primer	780 g/L 6.5 lb/gal				1
Primers/primer surfacers	580 g/L 4.8 lb/gal	same	same	420 g/L 3.5 lb/gal	2
Primer sealers	550 g/L 4.6 lb/gal	same	same	420 g/L 3.5 lb/gal	3
Single stage, solid color	600 g/L 5.0 lb/gal	same	same	420 g/L 3.5 lb/gal	4

Single stage, metallic/iridescent	550 g/L 4.6 lb/gal	same	same	420 g/L 3.5 lb/gal	5
2-Stage topcoat basecoat & clearcoat	600 g/L 5.0 lb/gal per formula**	same	same	480 g/L 4.0 lb/gal per formula**	6
Topcoats of more than two stages	630 g/L 5.2 lb/gal per formula**	same	same	480 g/L 4.0 lb/gal for trailers**	7
Spot coats, 1 liter limit each stage	600 g/L 5.0 lb/gal			546g/L **(11/2/02)**	8
Specialty Coatings as defined by §231	840 g/L 7.0 lb/gal				9
Strippable booth coatings	2.0 lb/gal				
**Formula for computing the VOC content of multi-stage coating is in subsection 503.1					

302.2 Refinishing Replacement Appurtenances on A Heavy Truck: At the time of (re)placement, a person may coat heavy truck body appurtenances such as mirrors, trim strips, license-plate frames, wheel covers, etc., with coatings that meet the applicable VOC limits in Table 2 or the requirements of subsection 302.3, if the item is about to be used to replace or supplement existing appurtenances, even if the item has never been coated or used.

302.3 Spot Refinishing of Heavy Trucks: A person may coat a heavy truck panel, a juncture of panels, or a body appurtenance using a coating with a VOC content that does not exceed the VOC-limits set forth in subsection a below, provided that the coatings as applied meet the requirements as set forth in subsection b:

a. VOC Limits for Spot Refinishing of Heavy Trucks:

(1) Through November 1, 2002– 600 g VOC/L (5.0 lb VOC/gal).

(2) After November 1, 2002–546 g VOC/L (4.55 lb VOC/gal).

b. Volume Limits:

(1) The coating shall be applied from a reservoir having a gross volume not exceeding 1.2 liters (5 cups) and containing no more than 1 liter (1.1 qt.) of coating.

(2) The complete topcoat of a single stage finish shall not use more than 1 liter.

(3) The complete topcoat of a multi-stage finish shall not exceed 2 liters.

(4) The total of all non-topcoat coatings, including wash and primers shall not exceed 1 liter.

c. Wash Primers may have up to 780 g/L (6.5 lb/gal).

303 COATING NEW SURFACES & REFINISHING HEAVY VEHICLES:

303.1 Coating New or Never Coated Surfaces: New or never coated surfaces of mobile equipment and of a vehicle, including a heavy truck, that is not manufactured under NAICS code 33611, are subject to a VOC limit of 3.5 lb VOC/gal (420 g/L) for all unbaked coatings over metal or plastic. The VOC content of coating applied on or over surfaces included in Table 3 shall comply with the VOC limits of Table 3.

303.2 Refinishing Surfaces that are Not Part of Body/Chassis: The recoating of a section of mobile equipment or a heavy-duty vehicle, including a heavy truck, that is not part of its body/chassis, its wheels, nor appurtenances, shall comply with the VOC limits of Table 3. This includes drive-train, steering gear, suspension, etc.

303.3 Refinishing Mobile Equipment and Heavy-Duty Vehicles: No person shall refinish mobile equipment or any heavy-duty vehicle that is not a heavy truck unless the coating as applied conforms to the VOC limits in Table 3, except that pre-treatment acid etchant wash shall conform to the VOC limits of row 1 in Table 2.

TABLE 3

VOC Limits for Coating As Applied To Uncoated Vehicle Surfaces COATING

COATING ON METAL SURFACES **The following includes Coating, Adhesive, & Adhesive Primer**	**Lbs. per gallon**	**Grams per liter**
Air-Dried Coating	**3.5**	**420**
Baked Coating [above 200°F (93°C)]	**3.0**	**360**
COATING ON VINYL SURFACES	**3.8**	**450**
COATING ON FABRIC SURFACES	**2.9**	**350**
COATING PLASTIC SURFACES not defined as flexible	**3.5**	**420**
COATING FLEXIBLE PLASTIC SURFACES (not Vinyl)		
- Primer	**4.1**	**490**
- Color Topcoat	**3.8**	**450**
- Basecoat/Clear Coat (Combined System)	**4.5**	**540**

304 MIXING REQUIREMENTS:

304.1 Suppliers Provide Mixing Instructions: No person shall supply vehicle refinishes regulated by Table 1 or Table 2 of this rule unless instructions for proper mixing/diluting are provided.

304.2 Vehicle-Appropriate VOC-Content and Instructions: If a supplier of a refinish coating represents that such coating is appropriate to coat a particular type of vehicle listed in Table 1 or Table 2:

a. The coating as mixed and applied must meet the applicable VOC limit in Table 1 or Table 2; and,

b. The supplier must provide only those mixing/blending instructions that meet the VOC limit; except,

c. Instructions that included both compliant and non-compliant formulation directions are acceptable if they have a line, mark, or totally obscuring coating through/over each word of all non-compliant mixing instructions.

304.3 **Mixing Requirements for the Coating User:** No person adding VOC containing thinner, reducer, or other diluent to any refinish coating regulated by either Table 1 or Table 2 shall add such diluents in proportions higher than those specified or recommended by the instructions provided by the supplier of the coating.

305 SURFACE-PREPARATION AND SURFACE-CLEANING FLUIDS:

305.1 A person cleaning or preparing a surface of a vehicle or mobile equipment for coating using a wipe method or other non-dip method shall use a material with a VOC content as applied of no more than 1.4 pounds of VOC per gallon as determined by methods set forth in subsections 502.1d or 502.3.

305.2 Neither surface-cleaning nor surface-preparation material that contains VOC shall be applied by means of motor-compressed air if applied in a mist or (finely atomized) spray.

305.3 Rule 331 applies to the dip cleaning of vehicle or mobile equipment surfaces.

306 MAINTENANCE: Any person subject to this rule shall operate and maintain in proper working order all production and cleaning equipment in which VOC-containing materials are used or stored.

307 PAINT GUN REQUIREMENTS AND LIMITS:

307.1 No person shall apply any coating with a VOC content exceeding 3.0 lb VOC/gal (360 g/l) using a spray gun, unless such spraying employs one of the following devices or systems:

a. A low pressure spray gun or system (such as HVLP), or

b. An electrostatic system, or

c. A system that atomizes principally by hydraulic pressure, including "airless" and "air-assisted airless".

307.2 A person is allowed to use a spray gun other than one allowed by subsection 307.1 under the following conditions:

a. For applying materials that have a VOC content not exceeding 3.0 lb VOC/gal (360 g/l) as applied, less water and non-precursor compounds.

b. If such guns are designed and used solely for detailing and/or touch-up, and have a maximum reservoir capacity of 250 cc (8.8 fluid ounces).

c. If such guns are used to apply adhesives.

308 EMISSION CONTROL SYSTEM: As an alternative to meeting an applicable coating-VOC limit and/or work practice pursuant to Sections 302, 304, 305, or 307, an operator is allowed to operate an Emission Control System (ECS) that reduces VOC emissions by at least 85%, pursuant to Section 504.

309 CLEANUP AND CLEANING SUPPLY AND APPLICATION EQUIPMENT:

309.1 All solvent used to manually clean spray guns shall be collected into a container which shall be immediately closed after all the solvent has been collected.

309.2 All solvent used for line cleaning shall be pumped or drained into a container kept closed when not in use.

309.3 Tanks used for stripping off coating or for cleaning objects shall be covered when not in use. Solvent-dragout shall be minimized by tilting or rotating the object to drain off any pools of solvent before removing the object from above the tank.

310 GUN CLEANING MACHINES: Any person subject to this rule shall use a paint gun cleaning machine to clean paint guns if the vehicle refinishing operation is required to have an Air Pollution Control Permit by Rule 200 of these Rules.

310.1 Manual Pre-Cleaning and Water Cleanup:

a. Manual cleaning outside of the cleaning machine is allowed if the cleaning machine is used immediately after manual cleaning, and if done without spraying cleaning solvent with the gun.

b. A cleaning machine is not required to clean a paint gun if the gun is cleaned with water or a cleaning mixture that is more than 1/2 water by weight or volume.

310.2 General Requirements for Gun Cleaning Machines: The gun-cleaning machine shall:

a. Be designed to clean paint-guns and be kept in proper repair and free from liquid leaks.

b. Have at least one pump which drives cleaning solvent through and over the gun, and a basin which permits containment of the cleaning solvent.

c. Have all covers and other surfaces that are exposed to gaseous or liquid VOC-solvent be impervious to both gaseous and liquid VOC-solvent.

310.3 Specific Requirements for 2 Types of Cleaning Machines:

a. Automatic Gun-Cleaning Machine:

(1) Shall be self-covering or enclosing when not loading or unloading.

(2) The machine shall have a self-closing cover or other self-enclosing feature which in the cover's closed position allows no gaps exceeding 1/8 inch (3 mm) between the cover and the cabinet.

(3) The machine shall be designed and maintained to prevent operation of its mechanical cleaning feature(s) unless it is completely covered or enclosed to the gap limits specified in the preceding subsection 310.3a.(2).

b. Non-Automatic Remote Reservoir Gun-Cleaning Machine:

(1) The cleaning machine shall be designed such that cleaning solvent drains from the sink/work-space quickly and completely into a remote reservoir when the work-space is not in use.

(2) The reservoir shall have the ability to contain VOC vapors and shall not have a cumulative total opening, including the drain opening(s), allowing VOC-escape to the atmosphere exceeding two square inches in area.

(3) Machine designs are allowed in which the base of the sink/work-space functions as the reservoir's top surface, as long the fit/seal between sink base and reservoir container allows the reservoir to meet the opening limits specified in the preceding subsection 310.3b(2).

311 STORAGE AND DISPOSAL OF VOC AND VOC-CONTAINING MATERIAL:

311.1 Any person subject to this rule shall store all VOC-containing materials, including but not limited to waste coatings, waste solvents and their residues, and rags in closed containers.

311.2 A container must have a legible label identifying the container's contents.

311.3 A container shall be kept closed except when contents are added or removed.

311.4 Disposal of waste or surplus VOC-containing materials shall be done in a manner that inhibits VOC evaporation, such as having these materials hauled off site in sealed containers.

312 EXEMPTIONS:

312.1 **Exemptions from other Rules:** Maricopa County Air Pollution Rules and Regulations Rules 330 and 336 do not apply to any vehicle or mobile equipment coating or refinishing operation to which this Rule 345 is applicable.

312.2 **Formal Vehicle Refinishing Training:** A student in classes at an accredited school which teaches vehicle refinishing is exempt from the recordkeeping provisions of this rule.

312.3 Coating with a non-refillable aerosol can is exempt from this Rule 345.

312.4 **Out-of Date Coatings:** Coating otherwise subject to Table 1 limits but manufactured before January 15, 1999, is exempt from Table 1 VOC limits until November 1, 1999.

SECTION 400 – ADMINISTRATIVE REQUIREMENTS

401 **ECS SCHEDULE:** Any owner or operator intending to install an ECS in a facility to comply with requirements of this rule shall comply with the requirements of subsection 504.3.

402 **THE RESPONSIBILITIES OF LARGE USERS:**

402.1 The owner or operator of a facility which emits 10,000 pounds or more of VOC in any calendar year must submit a report of such emissions on a form supplied by the Department after the end of that calendar year.

402.2 An owner or operator of a facility which in a calendar year meets or exceeds any of the following quantities must notify the Control Officer of this fact in writing by February 28 (within two months) after the end of that calendar year:

a. Used a total of 1000 gallons (3785 l) of coating (with reducer and hardener); or

b. Received a total of 1300 gallons (4920 l) of cleaning solvent, lacquer thinner and wash-thinner; or

c. Disposed of more than 1000 gallons or 6000 pounds (2722 kg) to hazardous waste collection; or

d. Submitted a total exceeding 9000 pounds (4082 kg) of VOC in the facility's most recently completed Maricopa County annual air-emission inventory form.

402.3 The Control Officer may require in writing a report of annual emissions from a facility which has given notification as required by the preceding subsection 402.2, or from any other facility which in the Control Officer's determination can have annually emitted 5 tons (4536 kg) or more of VOC.

403 JOBBERS/SUPPLIERS RECORDKEEPING RESPONSIBILITY FOR REFINISHES:

403.1 An owner or operator selling or supplying vehicle refinishing coatings, coating components, or refinishing supplies directly to facilities that refinish automobiles, light-duty vehicles, or heavy trucks in Maricopa County shall maintain records of the VOC content of such materials; and

a. Records shall be sufficient to calculate the total VOC annually sold to facilities described in the preceding subsection 403.1.

b. Records shall include sales of cleanup and surface preparation materials that contain more than 2% VOC by weight or volume, or more than 0.17 lb VOC/gal (20 g/L).

403.2 An owner or operator shall total cumulative vehicle-refinishing VOC sold during a current calendar year (pursuant to 403.1) in a quarterly manner, by the end of the month following each quarter.

403.3 Jobbers or suppliers annually supplying less than 100 pounds of vehicle refinishes and supplying less than 100 pounds of cleaning/surface prep materials to vehicle refinishers are exempt from the requirement of subsections 403.1 and 403.2.

404 WEIGHT EXCLUSION: Vehicles having a manufacturer's gross vehicle weight rating of 8600 lbs or more are excluded from NAICS code 33611, unless clearly identified as being included by the NAICS, as incorporated by reference in Section 505.

SECTION 500 – MONITORING AND RECORDS

501 RECORDKEEPING AND REPORTING: Any person subject to this rule shall keep the records required under this Section 501 in a consistent and complete manner and shall make them available to the Control Officer without delay during normal business hours.

501.1 Responsibility for Products in Use: An owner or operator shall maintain written records in the facility which give the name or code number of each VOC containing product and its VOC content as received. VOC content shall be expressed in pounds of VOC per gallon (or grams/liter), less water and non-precursors, excepting waterborne cleaners which shall include the water.

a. Examples of What to Include: All coating components as received from the supplier, before any in-house blending, such as coating base and tint base for topcoats, midcoats, primers, specialty coatings, sealers, and strippable booth coating; other coating components such as hardeners, catalysts, reducers, promoters, inhibitors and other coating additives; and stripper, wash-thinner, lacquer thinner, gun cleaning solvent, surface prep

cleaners and other cleaners, including waterborne cleaners which contain some VOC.

b. Sufficient Documentation: Any one of the following may be used to meet the requirements of subsection 501.1, as long as all VOC-containing refinishing products are accounted for pursuant to subsection 501.1, (first paragraph):

(1) An up-to-date hardcopy (in writing) list prepared for that facility.

(2) Current material safety data sheets (MSDS) or product data sheets showing the VOC content.

(3) Purchase documentation that gives VOC content, such as invoices and/or receipts showing VOC content.

(4) Current, dated manufacturers publications such as charts or lists which show VOC content, with the products used in the facility highlighted or otherwise clearly marked.

501.2 Documentation Of Purchases: Purchase records showing the volume of each VOC-containing refinishing-related product purchased shall be kept available for the current and the previous year. Actual invoices and receipts showing the volume of the material purchased will suffice in place of ledger-style records.

501.3 Record Retention: Records shall be retained for five years.

501.4 Records: The Control Officer may account as VOC emissions to the atmosphere any VOC that is not accounted for by adequate records of disposal or of reuse within a facility.

502 COMPLIANCE DETERMINATION:

502.1 For routine purposes, the Control Officer may determine VOC content from a manufacturer's product data document such as a current manufacturer's safety data sheet (MSDS) that provides exact product contents.

502.2 Measurement of VOC content of coating materials subject to this rule, including the requirements of Section 301, shall be conducted and reported in accordance with EPA Test Method 24 (as incorporated by reference in Section 505), with the following restrictions for multi-component, polymerizing coatings: Method 24 shall be a modified to eliminate the post-mixing dilution step (that employs toluene or other solvent). The mixture shall be spread instead by appropriate technique to form a thin layer, occupying the entire bottom of the foil pan. California's Bay Area Air Quality Management District Method 31 (amended 4/15/92) can be used as a guide for such spreading.

502.3 Low or No-Solids Materials:

a. The VOC content of solutions, dispersions, and emulsions that have no solids or less than 5% solids shall be determined by 1 of the following methods:

(1) South Coast Air Quality Management District Method 313-91, as incorporated by reference in Section 505.

(2) Method 31 of California's Bay Area Air Quality Management District, as incorporated by reference in Section 505.

b. Measurement of the VOC content of cleaning fluids, including those cleaners limited by Section 305 of this rule, shall be according to the formula in subsection 503.3 and applicable test methods in Section 505.

502.4 With reference to subsection 307.1a, measurement of air pressure at the tip of an air atomized paint spray gun that atomizes shall be performed using a device supplied by the gun's manufacturer for that purpose. The measurement shall be made dynamically at the center of the air cap and at the air horns, with the spray configured to a fan diameter of eight to ten inches on a flat surface being coated. The axis of the fan pattern shall be perpendicular to this surface.

502.5 **Pretreatment Wash Primers:** The acid weight percent of pretreatment wash primers must be determined using the American Society for Testing and Materials (ASTM) Test Method D 1613-96, as incorporated by reference in Section 505. If the pigment in a pretreatment wash primer prevents the use of this test method for determining the acid weight percent of the coating, then the test method shall be used for the nonpigmented component of the coating, and the acid weight percent shall be calculated based on the acid content of the nonpigmented component and the mixing ratio of the nonpigmented component to the remaining components recommended by the regulated entity.

502.6 **ECS Testing:**

a. The VOC content of gaseous emissions entering and exiting an ECS shall be determined by either EPA Method 18 or EPA Method 25 and its submethod(s), as are incorporated by reference in Section 505.

b. Capture efficiency of an ECS shall be determined either by EPA Method 204 and its submethods, or by using mass balance calculation methods in concert with EPA Methods 2, 2a, 2c, and 2d, as are incorporated by reference in Section 505.

503 FORMULAS:

503.1 For the purpose of determining compliance with the VOC content limits in Table 1 of this rule, each regulated entity shall determine the VOC content of a coating using the procedures described in subsection 503.2 for a single coating stage or as follows for the VOC content of a multi-stage coating.

$$\text{VOC multi} = \frac{\text{VOCbc} + \sum_{i=0}^{M} \text{VOCmc}_i + 2(\text{VOCcc})}{M + 3}$$

Where:

VOC_{multi} = VOC content of multi-stage topcoat, in grams VOC/liter of coating;

VOC_{bc} = VOC content of the basecoat, as determined in subsection 503.2;

VOC_{mc_i} = VOC content of midcoat i, as determined in subsection 503.2.;

VOC_{cc} = VOC content of the clearcoat, as determined in subsection 503.2; and

M = Number of midcoats.

In a situation where a "ground coat" is used prior to a basecoat, use of the equation shall be adjusted as follows: The ground coat will be considered the basecoat and the basecoat will be considered one of the midcoats.

503.2 Pounds of VOC per Gallon of Coating (Grams VOC/Liter): The mass of VOC per combined volume of VOC-plus-coating-solids before coating application, which can be calculated by the following equation:

$$\text{Pounds of VOC per Gallon (Grams/liter) of Coating} = \frac{W_s - W_w - W_{es}}{V_m - V_w - V_{es}}$$

Where:

W_s = weight of volatile material in pounds (or grams)

W_w = weight of water in pounds (or grams)

W_{es} = weight of non-precursors in pounds (or grams)

V_m = volume of total material in gallons (or liters if using grams)

V_w = volume of water in gallons (or liters if using grams)

V_{es} = volume of non-precursor compounds in gallons (or liters)

503.3 VOC Content of Cleaners and Reducers (Material VOC-Content):

$$VOC\ Content\ of\ Material = \frac{W_s - W_w - W_{es}}{V_m}$$

Using consistently either English or metric measures in the calculations
Where:

W_s = weight of all volatile material in pounds (or grams) including VOC, water, non-precursor organic compounds and dissolved vapors.

W_w = weight of water in pounds (or grams)

W_{es} = weight of all non-precursor compounds in pounds (or grams)

V_m = volume of total material in gallons (or liters)

504 EMISSION CONTROL SYSTEM (ECS) AND RELATED SYSTEM OPERATING REQUIREMENTS:

504.1 ECS Requirements: To meet the requirements pursuant to Section 308, an ECS shall be operated as follows:

a. The emissions-processing subsystem of the ECS shall reduce the VOC entering it by at least 90 percent.

b. Throughout the period when the VOC content exceeds the applicable VOC limits, the ECS shall be operated to control VOC emissions.

c. Materials that exceed the applicable VOC-limits shall be clearly identified such that workers are informed an ECS must be used.

504.2 Recordkeeping for An ECS:

a. On each day that an ECS is used to comply pursuant to Section 308, an owner or operator shall record the amount and VOC content of the material for which the ECS was used.

b. ECS Operation and Maintenance Records:

(1) On each day an ECS is used, make a permanent record of the operating parameters of the key systems as required by the O&M Plan.

(2) For each day or period in which the O&M Plan requires that maintenance be performed, a permanent record shall be made of the maintenance actions taken within 24 hours of maintenance completion.

504.3 ECS Schedule: Any owner or operator of a facility, first intending to install and commence to use an ECS pursuant to Section 308, shall submit for the Control Officer's approval an emission control plan describing the ECS by the first day of the 4th month after the month in which such facility becomes subject to the ECS requirement. The plan shall show how the ECS is to be used to achieve full compliance. The plan shall specify dates for completing increments of progress, such as the contractual arrival date of new control equipment. The Control Officer may require a person submitting such emission control plan to submit subsequent reports on progress in achieving compliance. Any and all ECS used to achieve such compliance shall be in operation by 15 months after the facility becomes subject to the ECS requirement.

504.4 Operation and Maintenance (O&M) Plan Required for ECS: For any ECS used to meet the requirements of this rule:

a. An owner or operator shall provide and maintain (an) O&M Plan(s) for the ECS and any ECS monitoring device.

b. The owner or operator shall submit to the Control Officer for approval the O&M Plans of each ECS and each ECS monitoring device.

c. The owner or operator shall comply with all the identified actions and schedules provided in each O&M Plan.

504.5 Providing and Maintaining ECS Monitoring Devices: Any person incinerating, adsorbing, or otherwise processing VOC emissions pursuant to this rule shall provide, properly install and maintain in calibration, in good working order and in operation, devices described in the facility's O&M Plan that indicate temperatures, pressures, rates of flow, or other operating conditions necessary to determine if air pollution control equipment is functioning properly and is properly maintained.

504.6 O&M Plan Responsibility: An owner or operator of a facility that is required to have an O&M Plan pursuant to subsection 504.4 must fully comply with all O&M Plans that the owner or operator has submitted for approval, but which have not yet been approved, unless notified otherwise by the Control Officer in writing.

505 TEST METHODS ADOPTED BY REFERENCE: The EPA test methods as they exist in the Code of Federal Regulations (CFR) (July 1, 1998), as listed below, are adopted by reference. The other test methods listed here are also adopted by reference, each having paired with it a specific date that identifies the particular version/revision of the method that is adopted by reference. These adoptions by reference include no future editions or amendments. Copies of test methods referenced in this section are available at the Maricopa County Air Quality Department, 1001 N. Central Ave., Phoenix, AZ, 85004.

505.1 EPA Test Methods:

a. EPA Methods 2 ("Determination of Stack Gas Velocity and Volumetric Flow Rate"), 2a ("Direct Measurement of Gas Volume Through Pipes and Small Ducts"), 2c ("Determination of Stack Gas Velocity and Volumetric Flow rate in Small Stacks or Ducts"), and 2d ("Measurement of Gas volumetric Flow Rates in Small Pipes and Ducts"). All 4 of the foregoing methods are in 40 CFR 60, Appendix A.

b. EPA Method 18 ("Measurement of Gaseous Organic Compound Emissions by Gas Chromatography") and its submethods (40 CFR 60, Appendix A).

c. EPA Test Method 24 ("Determination of Volatile Matter Content, Water Content, Density, Volume Solids, and Weight Solids of Surface Coatings") (40 CFR 60, Appendix A).

d. EPA Method 25 ("Determination of Total Gaseous Nonmethane Organic Emissions as Carbon") and its submethods (40 CFR 60, Appendix A).

e. EPA Test Methods 204 ("Criteria For and Verification Of a Permanent or Temporary Total Enclosure"), 204a, 204b, 204c, 204d, 204e, and 204f (Appendix M, 40 CFR 51).

505.2 Other Test Methods (Not EPA):

a. California's Bay Area Air Quality Management District (BAAQMD) Method 31 (April 15, 1992), "Determination of Volatile Organic Compounds in Paint Strippers, Solvent Cleaners, and Low Solids Coatings".

b. California's South Coast Air Quality Management District (SCAQMD) Method 313-91 (April, 1997).

c. American Society for Testing and Materials (ASTM) Test Method D 1613-96 (1996).

505.3 Other Reference Material: North American Industrial Classification System, Executive Office of the President, Office of Management and Budget, 1997, pp. 334-339, et. seq.

REGULATION III – CONTROL OF AIR CONTAMINANTS

RULE 346
COATING WOOD MILLWORK

INDEX

SECTION 100 – GENERAL

101 PURPOSE

102 APPLICABILITY

SECTION 200 – DEFINITIONS

201 ADHESIVE

202 AEROSOL-SPRAY COATING

203 AIR-ATOMIZED SPRAY (GUN)

204 ARCHITECTURAL COATING

205 BASECOAT

206 COATING

207 CONVENTIONAL AIR-ATOMIZED SPRAY (SYSTEM)

208 CUSTOM REPLICA MILLWORK

209 DAY

210 DILUENT

211 ELECTROSTATIC APPLICATION

212 EMISSION CONTROL SYSTEM (ECS)

213 FACILITY

214 FAUX FINISH

215 FINISHING MATERIAL

216 GROUNDCOAT

217 LOW PRESSURE SPRAY GUN

218 NON-OPAQUE

219 NONPERMANENT FINAL FINISH

220 OPAQUE COATING

221 REPAIR COATING

222 RESTRICTED-USE GUN

223 SEALER, PRIMER, OR GROUNDCOAT

224 SINGLE RESIN-LAYER FINISH

225 STAIN
226 STRIPPABLE COATING
227 STRIPPING OPERATION
228 TOPCOAT
229 TOUCH UP COATING
230 TRANSFER EFFICIENCY
231 VOC-BORNE COATING
232 VOC-SOLVENT
233 WASHCOAT
234 WOOD MILLWORK
235 WOOD-PRODUCT
236 WORKING DAY

SECTION 300 – STANDARDS

301 VOC CONTENT
302 LIMITATION OF CONVENTIONAL AIR-ATOMIZED SPRAY AND OTHER SPRAY METHODS ATOMIZING WITH HIGH-PRESSURE AIR
303 OPERATION AND MAINTENANCE
304 CLEANUP AND CLEANING OF SUPPLY AND APPLICATION EQUIPMENT
305 HANDLING AND DISPOSAL OF VOC
306 STATEMENT OF VOC CONTENT
307 EXEMPTIONS

SECTION 400 – ADMINISTRATIVE REQUIREMENTS

401 COMPLIANCE SCHEDULE
402 REGULATORY CLARIFICATION
403 GUN TAGGING REQUIREMENTS

SECTION 500 – MONITORING AND RECORDS

501 RECORDKEEPING AND REPORTING
502 COMPLIANCE DETERMINATION–TEST METHODS

APPENDIX A TO RULE 346

APPENDIX B TO RULE 346

Adopted 04/03/96
Revised 11/20/96
Revised 09/25/13

MARICOPA COUNTY
AIR POLLUTION CONTROL REGULATIONS

REGULATION III – CONTROL OF AIR CONTAMINANTS

RULE 346
COATING WOOD MILLWORK

SECTION 100 – GENERAL

101 **PURPOSE:** To limit emissions of volatile organic compounds from the surface preparation and coating of wood millwork.

102 **APPLICABILITY:** The provisions of this rule apply to any facility in Maricopa County applying finishing material to millwork included under SIC code 2431 made of wood or wood-derived material. Simplified provisions of Appendix B in this rule may be used by facilities which agree to a permit limit of less than 10 tons of VOC emissions per year. Sources emitting less than 2 tons of VOC per year may be allowed exemptions pursuant to subsection 307.2c.

SECTION 200 – DEFINITIONS: For the purpose of this rule, the following definitions shall apply, in addition to those definitions found in Rule 100 (General Provisions and Definitions) of these rules. In the event of any inconsistency between any of the Maricopa County air pollution control rules, the definitions in this rule take precedence.

201 **ADHESIVE:** Any substance, usually having a fluid phase during application, used principally to bond two or more surfaces into close proximity with one another.

202 **AEROSOL-SPRAY COATING:** A coating which is sold in a hand-held, pressurized, non-refillable container, usually of less than 22 fluid ounces (0.66 liter) capacity, and which is expelled from the container in a finely divided form when a valve on the container is depressed.

203 **AIR-ATOMIZED SPRAY (GUN):** Equipment used to apply coatings in which the chief means of atomizing the coating is via pressurized air which also mixes into the cloud of coating particles after expulsion from a spray nozzle.

204 **ARCHITECTURAL COATING:** Any coating applied to stationary structures and their appurtenances, to mobile homes, to pavements or to curbs.

205 **BASECOAT:** A coat of colored material, usually opaque, that is applied before graining inks, glazing coats, or other high-hiding finishing materials. A basecoated surface usually receives a topcoat also.

206 **COATING:** Any liquid, fluid, or mastic composition which is converted to a solid (or semi-solid) protective, decorative, or adherent film or deposit after application to a substrate as a thin layer.

207 **CONVENTIONAL AIR-ATOMIZED SPRAY (SYSTEM):** A spray which is atomized with air in a system designed to exceed 25 psig (1.7 Bar), as measured according to subsection 502.2, and which is not used with an electrostatic transfer system.

208 **CUSTOM REPLICA MILLWORK:** Millwork products individually produced or repaired after an order has been received from a client specifying a particular style and period, using both the style and the methods of construction, including materials, joinery, and finishes, which are authentic to the period.

209 **DAY:** A period of 24 consecutive hours beginning at midnight.

210 **DILUENT:** For the purpose of this rule, any fluid in or added to a coating such as thinner, retarder, reducer, solvent, or drying accelerator which solubilizes, adjusts concentration, viscosity, flow, or drying rates and which evaporates as the coating film solidifies and cures.

211 **ELECTROSTATIC APPLICATION:** A method of applying coating by electrically charging coating droplets or particles causing their deposition onto a substrate by electrostatic attraction.

212 **EMISSION CONTROL SYSTEM (ECS):** A system for reducing emissions of organic compounds, consisting of both collection and control devices which are approved in writing by the Control Officer and are designed and operated in accordance with good engineering practice.

213 **FACILITY:** For the purpose of this rule, all the pollutant-emitting activities belonging to SIC code 2431, which are located on one or more contiguous or adjacent properties, and under the control of the same person or persons under common control.

214 **FAUX FINISH:** A finish intended to simulate a surface other than wood, including, but not limited to, stone, sand, metal, fur and leather.

215 **FINISHING MATERIAL:** A coating other than one designed solely or principally as an adhesive, temporary maskant, and/or preservative. For millwork, finishing materials include, but are not limited to, topcoats, sealers, primers, stains, basecoats, groundcoats, washcoats, enamels, toners, glazes, and graining inks.

216 **GROUNDCOAT:** A colored coating applied to wood-product substrate, which completely hides the color of the substrate in a single coat.

217 **LOW PRESSURE SPRAY GUN:** An air-atomized spray gun which by design functions best at tip pressures below 10 psig (0.7 bar) measured according to

subsection 502.2 of this rule, and for which the manufacturer makes no claims to the public that the gun can be used effectively above 12 psig (0.8 bar).

218 **NON-OPAQUE:** A finish or coating which does not meet the definition of opaque as found in Section 221 of this rule. This includes coatings called "clear" by the wood products coating industry.

219 **NONPERMANENT FINAL FINISH:** A material such as wax, polish, nonoxidizing oil or similar substance which retains its effect only temporarily and must be periodically reapplied to a surface to maintain or restore the material's intended effect.

220 **OPAQUE COATING:** Any functional film building coating which completely hides all grain, marking, shade, and color of the substrate under all lighting conditions including the brightest, direct sunlight.

221 **REPAIR COATING:** A coating used to recoat portions of a previously coated product to cover mechanical damage to that previous coating following normal painting operations.

222 **RESTRICTED-USE GUN:** Any spray gun which atomizes coating using compressed air, such that in normal use or a use advertised by the manufacturer or distributor, the tip pressure exceeds 12 psig (0.8 bar) in measurements done pursuant to subsection 502.2. Restricted-use gun also includes, but is not limited to, all conventional air-atomized spray guns.

223 **SEALER, PRIMER, OR GROUNDCOAT:** A film-building finishing material used to seal the pores of wood or wood-derived material before additional coats of finishing material are applied. Finishing materials used primarily to alter the appearance or color of the substrate, such as stains, washcoats, glazes, inks, and toners, are not sealers.

224 **SINGLE RESIN-LAYER FINISH:** A completed, consumer-ready finish, which has received only one application of resin-based coating serving as both sealer and topcoat, and having a total average dry finish thickness from the top of the finish to the surface of the wood-product substrate not exceeding 3 mils (0.076 mm) before sanding, as determined pursuant to the test method in subsection 502.3. If a washcoat is also used, the finish is not a single resin-layer finish.

225 **STAIN:** A coating, formulated to enhance wood grain and change wood color without concealing surface grain. Stain includes sap stain, toner, non-grain-raising (NGR) stain, equalizer stain, no wipe stain, penetrating stain, wiping stain, and glaze. Stain excludes sealers and topcoats.

226 **STRIPPABLE COATING:** A coating which is applied to spray booth surfaces to receive the overspray and protect the substrate, and which is designed to be readily pulled off in strips or sheets and disposed of.

227 **STRIPPING OPERATION:** Any operation in which organic solvent is used to remove coating from a substrate.

228 **TOPCOAT:** The last permanent, functional film-building finishing material applied to a manufactured wood-product. When the wood-product substrate is already sealed with sealer, any further coats that build a functional film are topcoats. Finishing materials used primarily to alter the appearance or color of the substrate, such as stains, washcoats, glazes, inks, and toners are not topcoats. A nonpermanent final finish is not a topcoat.

229 **TOUCH UP COATING:** A coating used to cover minor coating imperfections after the main coating operation.

230 **TRANSFER EFFICIENCY:** The ratio of the weight of coating solids deposited on an object to the total weight of coating solids used in a coating application step or series of such steps, expressed as a percentage.

231 **VOC-BORNE COATING:** A coating in which the volatile portion contains, by weight, more VOC than water.

232 **VOC-SOLVENT:** A solvent or diluent, used to solvate, dilute, reduce, thin, clean or strip, in which the weight-percent of VOC exceeds the weight percent of water.

233 **WASHCOAT:** A transparent special purpose coating having a solids content by mass of 12.0 percent or less, and which is used to seal wood-product surfaces for any of the following purposes: to prevent undesired staining, to control penetration of subsequent finishes, to provide a barrier when paper laminates are applied to the wood-product, to seal glazes, and to improve adhesion of a waterborne topcoat.

234 **WOOD MILLWORK:** All millwork made of wood-product that is included in Standard Industrial Classification (SIC) industry number 2431. This includes, but is not limited to, shutters, doors, windows and their associated woodwork.

235 **WOOD-PRODUCT:** Wood or wood-derived material, such as chipboard, particle board, fiberboard, pressed board, paper, and any other material derived from wood, bamboo, cane, or rattan, that retains some of the physical structure(s) of such original material(s), even if only at a microscopic level.

236 **WORKING DAY:** A day, or any part of a day, in which a facility is engaged in manufacturing.

SECTION 300 – STANDARDS

301 VOC CONTENT:

301.1 **Coating VOC Limits:** No person shall apply topcoats, sealers or opaque coatings to wood-product surfaces on millwork unless VOC content is limited to the following, less water and non-precursor organic compounds:

a. General VOC Limits of Coatings

CATEGORY	grams/liter	lbs/gal
Non-opaque topcoat	635	5.29
Non-opaque sealer	645	5.38
Non-opaque acid-cured, alkyd amino topcoat	655	5.45
Non-opaque acid-cured, alkyd amino vinyl sealer	680	5.66
Opaque: Topcoat, Sealer, Primer, Groundcoat, Basecoat, or Stain	610	5.10

b. VOC Tradeoff Options: (Acid-cured, alkyd amino coatings are exempt from gun tagging requirements.)

(1) Lower VOC Topcoat and Unlimited Sealer: A sealer has no VOC limit if all of its topcoat(s) have no more than 3.83 lb VOC/gal (460 g/l).

(2) Lower VOC Sealer and Higher VOC Topcoat: A sealer containing no more than 275 g VOC/liter (2.3 lb/gal) may be covered by a topcoat over 635 g/l containing up to 680 g VOC/liter (5.66 lb/gal), if the gun applying the topcoat is properly tagged. Requirements for gun tagging are in Section 403.

(3) Single Application Finish: A coating over 645 g/l which qualifies as a single resin-layer finish pursuant to Section 225 may contain up to 680 g VOC/liter (5.66 lb/gal) if the gun applying the coating is properly tagged. Requirements for gun tagging are in Section 403.

c. Coatings with no VOC Limits: Non-opaque stains, washcoats, glazes, toners, inks and other non-opaque coatings not specified in subsection 301.1 have no VOC limits.

301.2 Strippable Booth Coatings: No person shall use a strippable booth coating containing more than 360 g VOC/liter (3.0 lb VOC/gal), as applied.

301.3 Emission Control System (ECS) as an Alternative Control: A facility may meet the VOC limits of either or both Subsections 301.1 and 301.2 if the owner or operator complies with all provisions in this rule's Appendix A and with the other applicable provisions of this rule.

301.4 Smaller Source Option: The owner or operator of a facility that has emitted 2 or more tons but less than 10 tons per year of VOC from all wood coating and associated operations is exempted from all provisions of Sections 300, 400, and 501 (but not Sections 100, 200, and 502) if all provisions are complied with in this rule's Appendix B. Sources emitting less than 2 tons of VOC per year may be allowed exemptions pursuant to subsection 307.2c.

302 LIMITATION OF CONVENTIONAL AIR-ATOMIZED SPRAY AND OTHER SPRAY METHODS ATOMIZING WITH HIGH-PRESSURE AIR:

302.1 Evidence of Transfer-Efficient Spray Equipment: A person shall not spray millwork with coating exceeding 4.29 lb VOC/gal (515 g VOC/liter) without providing evidence of possession and use of a low pressure spray gun or system, an electrostatic system, or a system that atomizes principally via hydraulic pressure, including air assisted airless and ultra-low-volume-air assisted technologies. Such requirement does not apply to any facility, activity, or person exempted by Section 307 of this rule nor to any specific system which is approved by the Administrator as having a transfer efficiency consistently exceeding 64%.

302.2 Limitation of Air-Atomized Spray other than Low Pressure: No person shall use a conventional air-atomized spray gun or other restricted use gun, except:

a. To apply finishing materials that have a VOC content not exceeding 4.29 lb/gal (515 g/liter).

b. If VOC emissions from the finishing application station, employing such a gun, are captured and directed to an ECS complying with the provisions of Appendix A.

c. For touch-up and repair only under either of the following conditions:

(1) such application is performed after completion of the entire finishing operation; or

(2) such application is performed after applying stain, and before any further coating, by equipment having a total capacity not exceeding 2.1 gallons (8 liters).

d. To apply less than 5% of all coating, pursuant to subsection 307.2d.

303 OPERATION AND MAINTENANCE: Any person subject to this rule shall operate and maintain in proper working order all process equipment in which VOC-containing materials are used or stored.

304 CLEANUP AND CLEANING OF SUPPLY AND APPLICATION EQUIPMENT:

304.1 Booth Cleaning: No person shall clean spray booth components using a solvent containing more than 8.0 percent by weight of VOC (including water and non-precursor compounds) except for conveyors, continuous coaters and their enclosures, and metal filters. If the spray booth coating is being replaced, a person shall use no more than 1.0 gallon (3.8 liters) VOC-solvent to clean the booth.

304.2 A person shall collect all solvent(s) used to clean spray guns and shall pump or drain all solvent used for line cleaning into non-leaking container(s). Such

containers shall be immediately closed or covered after all the solvent has been collected, and shall remain so except when in use.

305 HANDLING AND DISPOSAL OF VOC:

305.1 Use and Storage: A person shall cover and keep covered each VOC-containing material which is not currently in use. A person shall store finishing and cleaning materials in closed or covered containers.

305.2 Disposal of VOC and VOC-Containing Material: A person shall store all VOC-containing materials intended for disposal including, but not limited to, rags, waste coatings, waste solvents and their residues, in closed containers which are legibly labeled with their contents and which remain covered when not in use.

306 STATEMENT OF VOC CONTENT: Effective May 3, 1996, a manufacturer of wood coatings which are subject to this rule shall provide on each coating container or as an accompanying specification of each coating container a designation of VOC content in grams of VOC per liter (g/l) of coating or pounds of VOC per gallon (lb/gal) of coating, less water and non-precursor organic compounds. This requirement shall not apply to containers having a capacity of one liter (1.05 quart) or less.

307 EXEMPTIONS:

307.1 Total Exemption: The following materials are exempt from this rule: adhesives, architectural coatings, printing ink, and coatings not applied on or over a wood-product substrate.

307.2 Partial Exemptions

a. Touch-Up Cans: Coatings in aerosol spray cans not exceeding 22 fl. oz. (0.66 liter) capacity used exclusively for touch-up and/or repairs are subject only to the recording requirements of subsections 501.a, b., and c.[1]

b. VOC and Spray Exclusions: The following shall be exempt from subsection 301.1 and Section 302 of this rule:

(1) Refinishing, Replacement, and Custom Replica Millwork Operations: Any refinishing operation necessary for preservation, to return millwork to original condition, to replace missing millwork items to produce a matching set, or to produce custom replica millwork.

[1] This errata note is not part of Rule 346. For the reader's convenience, the reference to "subsections 501.a., b., and c." is incomplete. The correct reference should be "subsections 501.1a., 501.1b.(2), 501.1c., 501.2b.(2), 501.2b.(5), and 501.3." The reference will be corrected for the next revision of this rule.

(2) Limited Amounts: The use of the following coating types when the annual total use of all such types together is less than 948 liters (250 gal): prepackaged aerosol spray cans which are not used for touch-up or repair; metal leaf finishes; and faux finishes.

c. Small Source Status: A millwork coating facility which at any time demonstrates that it currently meets both of the following requirements is exempt from all provisions of this rule except for Section 303 "Operation and Maintenance" and Section 305 "Handling and Disposal of VOC". An operator of such an exempted facility shall keep on the premises current records of all coating related materials currently used, and their VOC content. For this purpose, a complete, updated set of receipts/invoices and Material Safety Data Sheets (MSDSs) will suffice if each receipt/invoice is retained on the premises at least two years.

(1) Facility records demonstrate that no more than a total of 55 gallons (209 liters) of VOC-borne wood-product coatings plus VOC-solvent, including wood furniture coating operations, are used in any month and that such monthly total divided by that month's number of days of coating application does not exceed 3.0 gallons (11.4 liters); and

(2) The facility emits less than 1814 kg (4000 lb) VOC, facility-wide per year from all wood-product coating operations including VOC in both solvent-borne and water-borne coatings, all VOC diluent added to coatings, all solvent cleaning and stripping, and VOC-solvent used for coating equipment cleanup.

d. Using Restricted Use Guns; Red Tag: In addition to the uses of restricted-use guns allowed under subsections 302.2 a., b., and c., a person may use a conventional air-atomized or other restricted use gun to apply coatings exceeding 4.29 lb VOC/gal (515 g/l) if all the following conditions are met:

(1) The volume of such coating applied in this way is less than 5% of the total volume of coating applied at the facility;

(2) Each gun has a red tag when spraying materials exceeding 4.29 lb VOC/gal. Requirements for gun tagging are in Section 403;

(3) A log shall be kept pursuant to subsection 501.2c. of the amount of coating used by each such gun. This shall be done daily or each time coating is added to the gun's coating reservoir; and semi-annual calculation shall be made, pursuant to subsection 501.2.

SECTION 400 – ADMINISTRATIVE REQUIREMENTS

401 COMPLIANCE SCHEDULE: The following schedule applies, with exceptions for operations using an Emission Control System provided in Appendix A.

401.1 Sources Emitting 50 TPY: Any facility which has applied for or received Title V status, has in its permit an annual VOC limit of 50 tons or more, or which has had an aggregate VOC emission to atmosphere after December 31, 1989, of 50.0 tons (45.35 Mg) or more in any calendar year or 300 pounds (136 kg) or more in any day, emitted from wood coating operations, including coating wood furniture, and from associated cleaning processes shall by May 3, 1996, be in compliance with all requirements of this rule and have submitted a Control Plan. The Control Plan shall set forth the maximum VOC contents and provide a copy of the documentation showing how the coating-as-applied values were determined.

401.2 Other Sources: The schedule follows for any wood millwork facility with total VOC emissions to atmosphere in each of the years 1990 through 1995 of less than 300 pounds (136 kg) in any day and 50.0 tons (45.35 MG) in any calendar year, emitted from wood coating operations, including coating wood furniture, and from associated cleaning processes:

a. A facility, for which an owner or operator chooses to meet the requirements of Section 301 by using compliant coatings, shall be in compliance with all applicable provisions of this rule, except for Section 301 and Section 302 by May 3, 1996. Such facility shall be in compliance with Section 301 and Section 302 of this rule by November 15, 1996.

b. Control Plan: A facility which has emitted more than 25 tons of VOC from coating operations in any of the years 1993 through 1995 must submit a Control Plan by August 1, 1996, setting forth the maximum VOC content and copies of the documentation showing how the coating-as-applied values were determined.

402 REGULATORY CLARIFICATION

402.1 Status with Respect to Rules 330 and 336: No wood millwork coating operation is subject to Rule 330 or to Rule 336.

402.2 Component Materials That Were Subject To Prior Regulation: The regulatory status of facilities, owners or operators is not affected by the fact that component materials, such as wood composites or paneling, may have been subject to Reasonably Available Control Technology (RACT) or other regulatory requirements in their original manufacture, before their subsequent use by a facility in Maricopa County.

402.3 Other Rules: Nothing in this rule exempts a person from complying with the NESHAP (National Emission Standards for Hazardous Air Pollutants) for coating wood furniture and fixtures or from complying with any other applicable Federal, states, and local laws or regulations.

402.4 Coating Over Wood Coating(s) the Same as Coating onto Wood: The VOC-limits for finishing materials given in subsection 301.1 of this rule

apply to such coatings whether applied directly onto any area of wood-product substrate or on any intermediate layer(s) of coating on the wood-product substrate.

402.5 Opaque Coatings:

a. **Anti-Circumvention:** If a completed finish is opaque but, by themselves, neither the topcoat nor the basecoat nor the primer/sealer is opaque, at least one of such coatings shall not exceed 5.1 lb VOC/gal (610 g VOC/liter) as applied.

b. **Confirmation of Opaqueness:** In a dispute between the Control Officer and an owner or operator as to whether a coating, which visually appears opaque to the Control Officer on a particular millwork surface, is opaque and therefore shall not exceed 5.1 lb VOC/gal (610 g VOC/liter) as applied, the finish shall be judged opaque if either the coating is described as opaque by the manufacturer or the material has a contrast ratio exceeding 84% at 1 dry mil (0.025 mm) of coating thickness.

403 GUN TAGGING REQUIREMENTS

403.1 An owner or operator shall use a correctly colored 4 square-inch vivid, durable tag, sticker, or painted emblem/label visible on the gun or within 3 ft of the gun on the gun's hose to meet the tagging/labeling requirements of subsections 301.1b. and 307.2d.

403.2 Tagging Summary: Guns shall be tagged with the designated color for the following coating content or gun-type situations; (each VOC content is less water and non-precursor organic compounds):

a. **A Red Tag or Label for VOC Tradeoff Option in Subsection 301.1b.**(Acid-cured, alkyd amino conversion varnishes are exempt from this subsection 403.2a.)

(1) On the gun applying topcoat above 5.29 lb VOC/gal (635 g/l) over sealer not exceeding 2.30 lb VOC/gal (275 g/l). [Reference subsection 301.1b.(2)].

(2) On the gun applying a single application finish exceeding 5.38 lb VOC/gal (645 g/l). [Reference subsection 301.1b.(3)].

b. **Using a Conventional or other Restricted Use Gun:** A red tag when applying coating over 4.29 lb VOC/gal (515 g/l) that is not for repair or touch-up. (Ref. subsection 307.2d.)

SECTION 500 – MONITORING AND RECORDS

501 RECORDKEEPING AND REPORTING: An owner or operator subject to this rule shall keep the following records and lists in a consistent and complete manner

and shall make them available to the Control Officer without delay during normal business hours. Each record shall be maintained for a minimum of five years.

501.1 Current List:

a. **VOC-Containing Materials:** A current list of all VOC-containing materials shall be maintained which contains the name or code and the VOC content of each. Any qualified single resin-layer finish shall be identified as such.

b. **How to Express VOC Content:**

(1) **Topcoats, Sealers, and Strippable Booth Coatings:** Two VOC-content values must appear for each topcoat, sealer, and booth coating: both grams VOC/liter (lb VOC/gal) *including* water and non-precursor organic compounds, *and* grams/liter *less* water and non-precursor organic compounds.

(2) **Other:** Use grams/liter (or lb/gal) for both coatings that are not sealers, topcoats, nor booth coatings and for non-coatings such as reducers, thinners, cleaners, etc.

c. **Acceptable Format:** VOC-containing materials shall be listed legibly and completely. The following is an example of an acceptable method:

Example: Identify and list each VOC-containing material in the following 6 categories: 1. topcoats; 2. sealers; 3. catalyst/hardeners; 4. diluents, such as reducers, coating solvents and thinners; 5. cleaning and stripping solvents; and 6. other VOC-containing materials. Next to each, record the VOC-content found on the container, an MSDS, an invoice, or other source.

d. **Mix Ratios:** A current list shall be maintained of the manufacturer's recommended mix ratio of components, including but not limited to adding reducers and catalyst/hardeners, except when the manufacturer has no recommendations for any additions.

501.2 Schedule for Recording Material Usage:

a. **Daily Updates for Non-Compliant Material:** Daily usage quantities of each topcoat, sealer or booth material that exceeds applicable VOC limits of subsection 301.1 or subsection 301.2 or subsection 304.1 shall be totaled and logged by the end of the following workday. VOC content shall be entered for each such material.

b. **Monthly Update for Materials Compliant with Sections 301 and 304:** By the end of the following month, an owner or operator shall update the following records for each month:

(1) **Diluted Coatings:** For each topcoat and sealer to which reducer or other VOC-containing diluent is added at any time after its arrival at a facility, enter its highest VOC content in lbs/gal (or g/l) less water and non-precursor organic compounds.

(2) The amount of coating, the amount of catalyst/hardener, and the amount of reducer/coating diluent used.

(3) The quantity and type of organic solvent used each month for stripping and cleaning;

(4) The quantity of organic solvent disposed of offsite.

(5) **Exception:** Update yearly the totals of the usage of each VOC-containing material known to be used in amounts less than 15 gallons (57 liters) per year.

c. **Semi-Annual Updates of Coatings Applied with Restricted-Use Guns:** Records associated with the Section 302 limitations on the use of conventional air-atomized spray guns and other restricted-use guns shall be kept. These records shall show for each semi-annual period the volume (VR) of finishing materials exceeding 515 g VOC/liter (4.29 lb VOC/gal) applied with conventional air-atomized spray guns and other restricted use guns. In addition, the total volume of all finishing material (AMV) used throughout the facility shall be determined. The total volume (VR) so applied over the previous six-months is divided by the total of all coatings used in the same period (AMV) and these calculations and the result are entered in the log.

501.3 **Disposal/Recovery:** An owner or operator shall keep records of disposal/recovery of all VOC-containing materials.

502 **COMPLIANCE DETERMINATION–TEST METHODS:** When more than one test method is permitted for a determination, an exceedance of the limits established in this rule, as determined by any of the applicable test methods, constitutes a violation of this rule.

502.1 Measurement of VOC content, pursuant to the VOC-limits of subsections 301.1, 301.2 and 304.1, shall be conducted and reported in accordance with EPA Test Method 24 (40 CFR 60, Appendix A). Acetone content shall be determined within the context of Method 24 by EPA Method 311 or other method acceptable to EPA. Multi-part coatings including those with reactive diluent(s) shall be tested by Method 24 procedures.

502.2 Measurement of air pressure at the center of the spray gun tip and air horns of a conventional air-atomized spray gun (reference Section 302 and subsection 307.2d.) shall be performed using an attachable device in proper working order supplied by the gun's manufacturer for performing such a measurement.

502.3 Determination of mil thickness for determining compliance with subsection 301.1b.(3) shall be performed by draw bar and calculations using the weight and area of the film and the density of the cured coating solids, by a Tooke Inspection Gage according to the instructions of its manufacturer, or by other means used for the purpose by a major coating manufacturer's laboratory or quality control.

502.4 Contrast ratio determinations pursuant to subsection 402.5b shall be done using American Society for Testing and Materials (ASTM) Method D-2805-80.

APPENDIX A TO RULE 346
Appendix A is the First of Two Appendices to Rule 346.
Appendix A includes all requirements for an Emission Control Device

a. **Eligibility:** A person is allowed to meet the VOC limits of either or both subsections 301.1 and 301.2, and meet the spray gun provisions of subsection 302.2 of this rule by using an ECS which reduces VOC emissions overall, including capture and processing, by at least 81 percent by weight.

b. **Compliance Schedule for ECS:** An owner or operator of a millwork coating facility shall have such facility in compliance per the following schedule. Total VOC emissions is the total VOC from all wood coating operations and associated cleaning processes. This includes furniture coating.

(1) **Sources Emitting 50 TPY:** Full compliance with all applicable requirements of this rule shall be by November 15, 1996, if such facility has applied for or received a Title V permit, has a permit with a VOC-emission limit of 50 tons or more, or which has had an aggregate VOC emission to atmosphere after December 31, 1989, of 50.0 tons (45.35 Mg) or more in any calendar year or 300 pounds (136 kg) or more in any day. In addition, an owner or operator shall provide the Control Officer with:

(a) Both proof of a binding contract for an ECS and a compliance plan by June 3, 1996, listing the dates of completion of increments of progress toward meeting the requirements of the subsection 301.3.

(b) An O&M Plan for the ECS by November 15, 1996.

(2) **Other Sources:** A facility shall be in compliance with the VOC limits of subsection 301.1 and 301.2 by January 15, 1997, if the facility's total VOC emission in each of the years 1990 through 1995 is less than 300 pounds (136 kg) in any day and 50.0 tons (45.35 MG) in any calendar year. In addition, the owner or operator shall provide the Control Officer with:

(a) Both proof of a binding contract for an ECS and a compliance plan by June 3,1996, listing the dates of completing the increments of progress toward meeting the requirements of subsection 301.3; and

(b) An O&M Plan for the ECS by January 2, 1997.

c. **Providing and Maintaining ECS Monitoring Devices:** Any person operating an emission control system (ECS) pursuant to subsection 301.3 of this rule shall install, maintain, and calibrate monitoring devices described in an O&M Plan submitted to the Control Officer pursuant to subsection d.(1). The monitoring devices shall measure temperatures, pressures, rates of flow, or other operating conditions necessary to determine if air pollution control equipment is functioning properly.

d. **Operation and Maintenance (O&M) Plan Required for ECS:**

(1) The owner or operator of an emission control system (ECS) used to meet the requirements of Section 301 of this rule shall provide the Control Officer with an Operation and Maintenance (O&M) Plan. This O&M Plan shall specify key system operating parameters, such as temperatures, pressures and/or flow rates, necessary to determine compliance with this rule, and describe in detail procedures and their frequency of implementation needed to maintain the ECS.

(2) The Control Officer's written approval of the O&M Plan is required. The owner or operator shall consistently implement all provisions of the O&M Plan.

(3) **Changes in Frequency:** Changes involving reduction in the frequency or extent of procedures or parameters in a Control-Officer approved O&M Plan shall have the written consent of the Control Officer prior to being implemented.

(4) **Other Changes:** An updated O&M Plan must be submitted to the Control Officer for review within 10 days of any changes not involving reduction in frequency or extent of procedures or parameters of an approved O&M Plan. Within five working days of a written disapproval of such changes, either the original O&M Plan shall be reinstituted or an alternative plan, negotiated with the affected facility and approved in writing by the Control Officer, shall be instituted.

e. Recordkeeping

(1) **ECS Operation and Maintenance Records:** On each day that an ECS is used to comply with Section 301 of this rule, an owner or operator shall make a permanent record of the operating parameters of the key systems described in the O&M Plan. For each day or period in which the O&M Plan requires that maintenance be performed, a permanent record shall be made of the maintenance actions taken, within 24 hours of maintenance completion. An explanation shall be entered for scheduled maintenance that is not performed during the period designated in the O&M Plan.

(2) **Other Records Required When Complying Via ECS:** An owner or operator choosing to meet the requirements of Section 301 through the use of an ECS shall maintain, in addition to the records required by subsection 501.2:

(a) Daily documentation showing the VOC content of the finishing material, as applied, in pounds VOC/gallon (g/l) when solvent or other VOC is added to the finishing material before application.

(b) Daily records showing the amount of coating, the amount of catalyst/hardener, and the amount of solvent, reducer, and/or diluent used.

f. Compliance Determination–Test Methods: When more than one test method is permitted for a determination, an exceedance of the limits established in this rule, as determined by any of the applicable test methods, constitutes a violation of this rule.

(1) Measurement of VOC content, pursuant to the VOC-limits of subsections 301.1, 301.2 and subsection 304.1, shall be conducted and reported in accordance with

EPA Test Method 24 (40 CFR 60, Appendix A). Acetone content shall be determined within the context of Method 24 by EPA Method 311 or other method acceptable to EPA. Multi-part coatings including those with reactive diluent(s) shall be tested by Method 24 procedures.

(2) Control efficiency of an emission control device used to meet the requirements of Section 301 shall be determined according to EPA Reference Method 25 or an applicable submethod of Method 25 (Title 40, CFR Part 60, Appendix A).

(3) When an unknown quantity of non-precursor organic compound is present in the input to a control device, EPA Method 18 shall be used to meet the requirement of Section 301. The Control Officer may specify an alternative EPA test method or other method approved by EPA.

(4) Capture efficiency of an emission control device used to meet the requirements of Section 301 shall be determined by mass balance in combination with ventilation/draft rate determinations done in accordance with subsection f(5), or according to "Guidelines for Determining Capture Efficiency" January 9, 1995, Candace Sorrell, Source Characterization Group A, Office of Air Quality Planning and Standards, US EPA. This EPA document is available at the Maricopa County Air Quality Department, 1001 N. Central Ave., Phoenix, Arizona, 85004, for information.

(5) Ventilation/draft rates of an emission control device used to meet the requirements of Section 301 shall be determined by EPA Methods 2, 2A, 2C, or 2D.

APPENDIX B – 2nd of Two Appendices to Rule 346

A SHORT-FORM OPTION

a. **Applicability:** This Appendix B to Rule 346 only applies to operators of facilities which have a permit or permit modification limiting VOC emissions from all wood millwork and furniture coating to less than 10 tons, and the permit or Control Officer states in writing that this Appendix B applies. For those facilities for which this Appendix B does apply, no provisions within Sections 301 through 501, inclusive, shall be used to substitute for provisions in this Appendix B. Facilities subject to this Appendix B are also subject to all of Sections 100, 200, and 502.

b. **Definitions:** For the purposes of this Appendix B, the following definition shall apply:

(1) **MINUS EXEMPT MATERIALS (MINUS EXEMPTS):** Means the same as "less water and non-precursor organic compounds" in specifying VOC content.

c. **Two Principal VOC Limits:** You must meet the limit of pounds of VOC per gallon of coating (grams VOC/liter) after all blending and reducing is completed. All VOC limits are minus exempt materials.

(1) **All Non-Opaque Sealers, Primers, & Topcoats:** 5.45 lb VOC/gal or 655 g/liter.

(2) **All Opaque sealers, Primers, Basecoats & Topcoats:** 5.10 lb VOC/gal or 610 g/liter.

d. **VOC Tradeoff Options:**

(1) **Low VOC Topcoat with Unlimited Sealer:**
Low VOC topcoat–limit of 3.83 lb/gal topcoat (460 g/liter) and
Higher VOC sealer– no VOC limit for sealer under such topcoat

(2) **Low VOC Sealer with Higher VOC Topcoat:**
Low VOC sealer–limit of 2.30 lb/gal sealer (275 g/liter)
Higher VOC topcoat–Topcoat over such sealer may have up to 5.66 lb/gal (680 g/l)

(3) **One-Step Finish:** The operation must meet 2 conditions
Higher VOC combination sealer & topcoat–up to 5.66 lb/gal (680 g/liter)

The 2 Conditions:

I. A single wet application of either sealer or topcoat (not both).

II. Thickness of the dry finish cannot exceed 3 dry mils, as determined by the test method in subsection

e. **Spray Method Requirements:**

(1) **Guns with Higher Transfer:** If you spray coating having over 4.30 lb VOC/gal (515 g/l), you must use and have in evidence for an inspector at least one of the following onsite:

- Low pressure gun with less than 12 psig at tip. Examples: solely HVLP gun; a turbine gun.
- Airless; includes air-assisted airless.
- An electrostatic system.

(2) Green Tag Option: Restriction on conventional Guns and other Restricted-Use Guns:

(a) Green Tag Requirements: A conventional air-atomized or other restricted-use gun shall have a durable and visible tag, sticker, or painted emblem, no less than 4 square inches in area on the gun or within 3 ft of the gun on the gun's hose, or the facility is in violation. *But,* such a tag is not required at a facility having and using only coatings which contain less than 4.30 lbs VOC/gal (515 g/l), as applied.

(b) Prohibition: No coating over 4.30 lb VOC/gal (515 g/liter) may be applied with a *conventional* air-atomized or other *restricted-use gun*. This prohibition includes, but is not limited to, traditional lacquers, washcoats, and low-solids stains. ("Conventional air-atomized gun" is defined in Section 207. "Restricted-use gun" is defined in Section 223.)

(3) Exemptions from VOC and Spray-Method Limits: Prepackaged aerosol spray in cans under 22 fl. oz.; faux & metal-leaf finish are exempt from Appendix B subsections c., d., e.(1) and e.(2), as is any refinishing operation necessary for preservation, to return millwork to original condition, to replace missing millwork items to complete a matching set, or to produce custom replica millwork. But nothing exempted by the previous sentence is exempt from the annual inventory of VOC emissions or from other provisions of this Appendix B.

f. Housekeeping Functions:

(1) Keep Coatings, Cleaners, & Waste-materials Covered: Coatings and cleaners not in use, as well as waste coatings, cleaning materials including solvent-dipped rags, and solvent used to clean spray equipment must be collected into a closed container or a container which is closed immediately after receiving such material.

(2) Booth Cleaning: If booth/components other than *metal* filters are cleaned with solvent, no solvent which is more than 3.8 lb/VOC per gallon (455 g/l) shall be used. However, up to 1 gallon of solvent over 3.8 lb VOC/gal may be used for cleaning a booth as part of replacing coating on the booth.

g. Records: Keep a list of all VOC containing material with the name and amount of VOC in each. Express VOC content in pounds of VOC per gallon or grams of VOC per liter. For topcoats and sealers, use the VOC-content listed as "less 'exempt' materials" or "EPA" or "EPA Method".

(1) **If you Ever Do your Own Reducing or Thinning of a Sealer or Topcoat:** Keep a list of the maximum VOC content of any material after you thin it or add additives at your facility.

(2) **Keep Receipts for 5 Years** of the amount received for each VOC-containing material and of the amount of all VOC-waste materials sent for recycling or hazardous waste collection.

(3) **What to Record and How Often:** Record the amount in the following 4 categories, (a) to (d), noting either the amount "used" or the amount "received" since your last records update:

(a) All coatings including topcoats, sealers, stains, etc., including all parts, catalysts, activators, additives, hardeners (*not* reducers). If you use conventional or other restricted-use guns at all, total *separately* the coatings having less than 4.3 lb VOC/gal (515 g/l);

(b) All reducers and diluents to be used for reducing or diluting coatings (not cleaning);

(c) All solvents, strippers, thinners, and VOC-containing materials used for cleaning and cleanup (not reducing); and

(d) All other VOC containing materials connected with wood coating. Omit janitorial & building maintenance.

(e) **How Often to Update your Records:**

(1) Update the above items in (a), (b), (c), and (d) weekly if your total monthly *use* of all coatings and diluents [(a) + (b)] is 250 gallons or more. Otherwise, update monthly.

(2) You may record just once a year those types of materials you use less than 15 gallons of. Example: I use 5 kinds of graining ink. Added all together, I use 14 gallons of all graining ink combined: I only have to update my graining inks once a year.

REGULATION III – CONTROL OF AIR CONTAMINANTS

RULE 347
FERROUS SAND CASTING

INDEX

SECTION 100 – GENERAL

101 PURPOSE

102 APPLICABILITY

SECTION 200 – DEFINITIONS

201 BINDER

202 CERTIFIED PRODUCT DATA SHEET

203 DAY

204 EMISSION CONTROL DEVICE

205 EXEMPT COMPOUNDS

206 FACILITY-SPECIFIED WORKDAY

207 FERROUS METAL

208 INVESTMENT CASTING

209 MOLD-WASH

210 ORGANIC BINDER MATERIAL

211 ORGANIC COMPOUND

212 SAND

213 SAND CASTING

214 VOC CONTENT (POUNDS OF VOC PER GALLON OF MATERIAL)

SECTION 300 – STANDARDS

301 LIMITS

302 OPERATION AND MAINTENANCE

303 STORAGE AND DISPOSAL OF BINDERS, SOLVENTS, AND OTHER VOC CONTAINING MATERIAL

304 EXEMPTIONS

SECTION 400 – ADMINISTRATIVE REQUIREMENTS

401 COMPLIANCE SCHEDULE

402 OTHER REGULATORY MATTERS

SECTION 500 – MONITORING AND RECORDS

501 RECORDKEEPING AND REPORTING

502 INSTALLING AND MAINTAINING ECS MONITORING DEVICES

503 COMPLIANCE DETERMINATION–TEST METHODS

Adopted 03/04/98
Revised 09/25/13

MARICOPA COUNTY
AIR POLLUTION CONTROL REGULATIONS

REGULATION III – CONTROL OF AIR CONTAMINANTS

RULE 347
FERROUS SAND CASTING

SECTION 100 – GENERAL

101 **PURPOSE:** This rule is to limit the amount of volatile organic compounds (VOCs) emitted by organic binder materials and other organic materials used in molds made of sand or other finely divided refractory material, in which ferrous metals are cast.

102 **APPLICABILITY:** This rule applies to the sand-casting of ferrous metal and does not apply to investment casting.

SECTION 200 – DEFINITIONS: For the purpose of this rule, the following definitions shall apply, in addition to those definitions found in Rule 100 (General Provisions and Definitions) of these rules. In the event of any inconsistency between any of the Maricopa County air pollution control rules, the definitions in this rule take precedence.

201 **BINDER:** Any material which is used to bind molding sand or other refractory particles into a cohesive mold or part of a mold used for metal casting. The term, binder, includes any catalysts and any additives incorporated or mixed into the binding material, unless such catalyst or additive is excluded in writing by the Control Officer.

202 **CERTIFIED PRODUCT DATA SHEET:** A document, signed by an officer of a binder or coating-supplying operation, that states the maximum organic content or VOC content of a particular product as supplied.

203 **DAY:** A period of 24 consecutive hours beginning at midnight.

204 **EMISSION CONTROL DEVICE:** A system, approved in writing by the Control Officer, which reduces emissions of organic compounds and consists of collection and control devices which are designed and operated in accordance with good engineering practice.

205 **EXEMPT COMPOUNDS:** The non-VOC, evaporating portion of a formulation; this necessarily includes all non-precursor organic compounds and all volatile inorganic compounds such as water.

206 **FACILITY-SPECIFIED WORKDAY:** The regular starting time (and ending time) chosen by a facility operator to designate the facility's own workday of 24 consecutive hours.

207 **FERROUS METAL:** Iron, steel, or a metal alloy in which iron is the greatest constituent.

208 **INVESTMENT CASTING:** A type of metal casting otherwise known as "lost-wax process" in which a mold, later used to receive molten metal, is built up around a fusible model. When the mold attains sufficient size, the model is melted out of the mold.

209 **MOLD-WASH:** A liquid coating or surfacing agent, containing refractory particles and binding agent(s), which is applied to the heat-receiving surfaces of a mold to impart desired casting properties.

210 **ORGANIC BINDER MATERIAL:** The organic-compound portion of those binders that contain more than 5% organic compound(s) by weight.

211 **ORGANIC COMPOUND:** Any compound of carbon excluding carbon monoxide, carbon dioxide, carbonic acid, metallic carbides and carbonates, and ammonium carbonate.

212 **SAND:** Granular, non-flammable, mineral material which lacks an organic component and has refractory properties.

213 **SAND CASTING:** A type of metal casting in which molten metal is poured into a mold made primarily of sand or other finely divided refractory material, bound together by binder material. For the purposes of this rule, sand casting does not include investment casting.

214 **VOC CONTENT (POUNDS OF VOC PER GALLON OF MATERIAL):** The weight of VOC per volume of material that can be calculated by:

$$Pounds\ of\ VOC\ per\ Gallon\ of\ Material = \frac{W_s - W_{es}}{\mathrm{Vm}}$$

Where:

Ws = weight of all volatile (evaporating) material, in pounds

Wes = weight of water and all other exempt components, in pounds

Vm = volume of material, in gallons.

SECTION 300 – STANDARDS

301 **LIMITS:** No person shall operate a ferrous sand-casting facility with an aggregate emission to atmosphere of 150 pounds (68 kg) or more of VOC in any day or 25 tons (22.7 Mg) or more of VOC in any year from ferrous sand-casting operations, unless VOC emissions from mold binders are controlled either pursuant to subsection 301.1 or pursuant to subsection 301.2.

301.1 **Control Device: (**An) Emission Control System(s) which through capture and control reduces the total, facility-wide VOC emissions from binder by at

least 81% as determined by the test methods referred to in Section 503 of this rule. VOC emissions from binders shall include but not be limited to VOC emitted from binders during mold-making, metal casting, and off-gassing from residual binder adhering to granules of mold sand.

a. Such System shall be operated whenever VOC emissions from binder can exceed 7 pounds (3.2 kg) per day, facility-wide.

b. The requirement for 81% control in subsection 301.1 does not apply to those clock hours during which the operator can demonstrate that such mold-binder VOC-emissions are less than 1 pound per hour, facility-wide.

301.2 **Alternative Compliance Method:** For each facility-specified workday in which molds are made, the ratio of organic binder-material in all binder used to all sand receiving binder shall not exceed 1.35 to 100, by weight, as determined by the formula in subsection 503.6 of this rule.

a. The organic material in binders that contain no more than 5% organic compound(s) by weight is excluded from inclusion in the formula.

b. Failure to obtain the sand ordinarily used for molding shall not be an excuse to exceed the binder-to-sand ratio limit pursuant to subsection 301.2, except as is provided in Rule 100, Section 501 of these rules.

301.3 **Surfacing Materials:** A person shall comply with the following limits when using mold-wash or other mold surfacer:

a. VOC Content:

(1) Prior to 12:01 AM, January 1, 1999, neither mold wash nor other mold surfacing product shall contain more than 2.5 lb VOC/gal (300 g/l).

(2) After 12:01 AM, January 1, 1999, neither mold wash nor other mold surfacing product shall contain more than 1.0 lb VOC/gal (120 g/l).

b. Averaging Option: In lieu of observing the mold-wash VOC limit in subsection 301.3a, a person may choose to average mold-wash VOC content over each completed facility-specified workday, pursuant to all provisions in (1) and (2) as follows:

(1) For each facility-specified workday, the average is recorded within 13 hours after the start of the following facility-specified workday, using the formula in subsection 503.7 of this rule; and

(2) Such average does not exceed a VOC content of 0.90 pounds VOC per gallon.

301.4 Gassing Operations: If a binder system that includes the injection of a reactive gas, can without controls emit more than 1 pound per hour of VOCs, its emissions shall be controlled by an emission control device that attains one of the following levels of control.

a. 85% overall control (capture and processing) of such VOC.

b. 90% capture and a maximum of 3.5 pounds per hour VOC emission from the control device at any and all production levels.

302 OPERATION AND MAINTENANCE:

302.1 General Maintenance: Any person subject to this rule shall operate and maintain in proper working order all process equipment in which VOC containing materials are used or stored.

302.2 A Systematic Program to Establish Compliance with Subsection 301.2: The owner/operator, complying with this rule pursuant to subsection 301.2 of this rule, shall have a systematic program as follows:

a. The program shall consist of devices and/or other effective means, which each day accurately indicates the amount of sand and the amount of binder, catalyst and any other additive that contains organic compound(s) and is incorporated into the molding sand.

b. Such program shall be in effect continuously during the mixing of binder with molding sand, and shall be of sufficient accuracy and consistency as to determine compliance with subsection 301.2 of this rule.

c. Any devices that are part of the program and are resettable shall be so protected as to preclude resetting by personnel not designated by the operator.

d. The systematic program shall include a complete, written description of its correct functioning, and shall be subject to the Control Officer's approval.

302.3 Operation and Maintenance (O&M) Plan Required for ECS:

a. The owner or operator of an emission control system (ECS) operated pursuant to subsection 301.1 or subsection 301.4 of this rule shall have an Operation and Maintenance (O&M) Plan for each ECS. This O&M Plan shall specify key system operating parameters, such as temperatures, pressures and/or flow rates, necessary to determine compliance with this rule, and describe in detail procedures and their frequency of implementation needed to maintain the ECS. The owner or operator shall provide a copy of the O&M Plan, if so requested by the Control Officer.

b. The owner or operator shall implement all provisions of the O&M Plan with the frequency specified by the Plan.

c. **Changes in Frequency:** Changes involving reduction in the frequency or extent of procedures or parameters in a Control-Officer approved O&M Plan shall have the written consent of the Control Officer prior to being implemented.

d. **Other Changes:** An updated O&M Plan must be submitted to the Control Officer for review within 10 days of any changes not involving reduction in frequency or extent of procedures or parameters of an approved O&M Plan. Within five working days of a written disapproval of such changes, either the original O&M Plan shall be reinstituted or an alternative plan, negotiated with the affected facility and approved in writing by the Control Officer, shall be instituted.

303 STORAGE AND DISPOSAL OF BINDERS, SOLVENTS, AND OTHER VOC CONTAINING MATERIAL:

303.1 **Storage:** A person shall cover and keep covered or enclosed each uncured binder material, any solvents, and any other VOC-containing material which are not in use. A person shall store binder materials and cleaning materials in closed or covered containers.

303.2 **Disposal of VOC and VOC-Containing Material:** A person shall store all waste materials containing any VOC in fluid form, including but not limited to uncured binder components, rags, waste coatings, waste solvents and their residues, in closed containers. Such containers shall have labels that legibly identify their contents and shall remain covered except when contents are being added or removed.

304 **EXEMPTIONS:** Each calendar year an owner or operator is allowed to claim a total of 55 gallons of mold-wash that is exempt from all requirements pursuant to subsection 301.3 of this rule if all such mold-wash is separately identified, logged, and each month is cumulatively totaled for the year.

SECTION 400 – ADMINISTRATIVE REQUIREMENTS

401 **COMPLIANCE SCHEDULE:** This rule is effective September 1, 1998.

402 OTHER REGULATORY MATTERS:

402.1 Nothing in this rule shall relieve a person from complying with other applicable environmental statutes and rules.

402.2 Rule 331 of these rules applies to cleaning, degreasing, and stripping processes which can emit VOC. Rule 336 applies to the coating of castings.

SECTION 500 – MONITORING AND RECORDS

501 RECORDKEEPING AND REPORTING: An owner or operator subject to this rule shall keep the following records and lists in a consistent and complete manner, and shall make them available to the Control Officer upon request. Records of the previous 12 months, requested during normal business hours, shall be made available without delay. Each of the following records shall be maintained for a minimum of five years:

501.1 Current List:

a. Maintain a current list of all VOC-containing fluid materials as received by the facility such as binders and/or binder components, coatings, cleaning solvents, lubricants and any other VOC-containing substances.

b. List the name or designation of each and include next to it the VOC content of each in pounds per gallon or grams per liter.

c. This requirement does not apply to materials having less than 2 percent organic content by volume as received.

501.2 Monthly Schedule: By the end of the following month, an owner or operator shall update the following records for each completed month:

a. The amount of each binder constituent used.

b. The amount of each mold-wash and surfacer used.

c. The quantity and type of VOC-containing solvent added each month as a diluent in binders, mold-wash, surfacer, or as a diluent in some other production capacity.

d. The quantity of fluid VOC or material containing any fluid VOC disposed of offsite. This includes VOC on rags, sand, and other materials.

e. Annual Exception: Yearly, update the totals of the usage of each fluid, VOC-containing material that is known to be used in amounts totaling less than 15 gallons (57 liters) per year for all that type of material.

501.3 Frequency of Computing the Binder-to-Sand Ratio: The following provisions apply to a facility complying with VOC limits pursuant to subsection 301.2 of this rule:

a. Monthly: Computations of mass balance for the month shall be made according to the period-weighted average formula in subsection 503.6 of this rule within 7 workdays after the end of the month.

b. Daily from Meter Readings: Such calculations for each day, determined with the numerical output(s) of the system run pursuant to subsection 302.2 of this rule shall be completed and entered in a log by

12:01 PM of the following workday or by the middle of the first shift of the following facility-specific workday.

c. Reduced Frequency of Determination for Ratios Below Limits:

(1) Earning Weekly Determinations: If no daily ratios exceed 1.27 : 100 for forty consecutive workdays and no weekly ratio is above 1.25 : 100 during the same period, then weekly averaging may be instituted in place of daily calculations of the daily average, until such time as that weekly ratio is exceeded. Following such an exceedance, daily determinations shall be resumed.

(2) If there is no weekly average ratio above 1.20 : 100 for 10 consecutive weeks, then the following schedule may be followed:

(A) Determine each month's average by the middle of the first full, facility-specified workday of the following month; and

(B) In each month, determine the weekly average-ratio of a single, selected week in that month by the middle of the first full workday of the following week. The selected week shall be either the week specified in **(i)** or shall be the week specified by the Control Officer pursuant to **(ii)**:

(i) Determine the weekly average ratio for the week that falls immediately after the 3rd full work-week of the month.

(ii) The Control Officer may from time to time designate to the operator a random work-week of the month for determination of that week's average organic-compound to sand ratio. The Control Officer shall notify the operator prior to the commencement of production activities for the designated work-week.

(C) Determine the weekly average ratio by the middle of the first full workday of the following week. If any monthly average ratio exceeds 1.19 :100 or if any weekly average exceeds 1.20 : 100, then weekly averaging shall be resumed, unless the daily ratio maximum in 501.3c(1) of this rule is also exceeded, in which case daily determinations shall be resumed pursuant to subsection 501.3b.

(3) The schedule of determinations pursuant to subsections 501.3c(1) and (2) is disallowed if any exceedance or violation occurs of said schedule or of subsection 301.2 requirements. In either case, the operator shall then resume each schedule in subsections 501.3a and 501.3b.

(4) **Reinstatement:** Should an operator desire to reinstate a schedule provided in subsection 501.3c, the operator shall make such a request, in writing, to the Control Officer. The request shall state changes or improvements that make meeting the schedule's requirements reasonably certain. The Control Officer shall approve or deny such a request in writing.

502 INSTALLING AND MAINTAINING ECS MONITORING DEVICES: Any person operating an Emission Control System (ECS) pursuant to subsection 301.1 of this rule shall install, maintain, and calibrate monitoring devices described in an O&M Plan submitted to the Control Officer pursuant to subsection 302.3. The monitoring devices shall measure temperatures, pressures, rates of flow, or other operating conditions necessary to determine if air pollution control equipment is functioning properly.

502.1 ECS Operation and Maintenance Records: On each day that an ECS is used to comply with Section 301 of this rule, an owner or operator shall make a record, retained for 5 years, of the operating parameters of the key systems described in the O&M Plan. For each day or period in which the O&M Plan requires that maintenance be performed, a permanent record shall be made of the maintenance actions taken, within 24 hours of maintenance completion. An explanation shall be entered for scheduled maintenance that is not performed during the period designated in the O&M Plan.

502.2 Other Records Required when Complying Via ECS: An owner or operator choosing to meet the requirements of Section 301 through the use of an ECS shall maintain, in addition to the monthly records required by subsection 501.2 of this rule, daily records showing the amount of binder, wash, and diluent used.

503 COMPLIANCE DETERMINATION–TEST METHODS: When more than one test method is permitted for a determination, an exceedance of the limits established in this rule determined by any of the applicable test methods constitutes a violation of this rule.

503.1 Calibration of Metering Equipment on the Sand/Resin Mixer:

a. Each month or as often as calibration is prescribed by the operating instructions supplied by the manufacturer , whichever is more frequent, the amount of sand delivered per minute at each different sand-supply rate for each different sand-supply equipment configuration in current use shall be determined prior to any adjustment, and recorded. The same shall be done for the binder at each resin ratio setting and for the catalyst flowmeter if one is used pursuant to required calculations.

b. If adjustment is made to any device of which such adjustment can affect the flow rate, a flow rate test shall be performed subsequent to completion of adjustment, and the result recorded.

503.2 VOC and Organic Content–Laboratory Methods:

a. Washes: The VOC content of mold-washes and surfacers, as applied, shall be determined by a certified product data sheet or EPA Test Method 24 of 40 CFR Part 60, Appendix A. If there is a discrepancy between the information on the certified product data sheet and the results of the Method 24 analysis, compliance status shall be based on the Method 24 results.

b. Binders: The organic-compound content of binders, as used, shall be determined by a certified product data sheet or EPA Test Method 415.1, Total Organic Carbon. If there is a discrepancy between the information on the certified product data sheet and the results of the EPA Test Method 415.1, compliance status shall be based on the Method 415.1 results.

c. Molds: The following are laboratory methods for determining the organic content of sand in a cured mold. Using these methods requires that an initial determination be made of the total organic carbon or the amount of loss on ignition (LOI) of the sand before the sand is combined with binder and formed into a mold.

(1) EPA Test Method 415.1, Total Organic Carbon, or by another Control-Officer approved, standard test-method for determining total carbon that is either an EPA-approved method or is a submethod included by an EPA test-method.

(2) When the percentage of organic compounds in a binder has been established to the satisfaction of the Control Officer, American Foundry Society Procedure 117-87-S, Loss On Ignition, may be used.

503.3 Control efficiency of an emission control device required by Section 301.1 shall be determined according to EPA Reference Method 25 or an applicable submethod of Method 25, 25A, or 25 B (Title 40, CFR Part 60, Appendix A).

503.4 Capture efficiency of an emission control device required by Section 301.1 shall be determined by mass balance in combination with ventilation/draft rate determinations referenced in subsection 503.5, or shall be done in accordance with US EPA Test Methods 204, 204a, 204b, 204c, 204d, 204e, and 204f, Appendix M, 40 CFR 51. This EPA document is incorporated by reference and is available at the Maricopa County Air Quality Department, 1001 N. Central Ave., Phoenix, Arizona, 85004.

503.5 Ventilation/draft rates of an emission control device required by Section 301.1 shall be determined by EPA Reference Methods 2, 2A, 2C, or 2D (40 CFR Part 60, Appendix A).

503.6 Calculations Determining Compliance with Alternative Compliance Method, Subsection 301.2: Subsection 301.2 requires a determination of the facility-wide, period-weighted average-ratio of the organic mass of all the binders used as compared to the mass of sand receiving the binders during an averaging period. This shall be calculated using the following equation: Organics to binder-sand ratio =

$$\frac{M_1 O_1 + M_2 O_2 + \ldots\ldots + M_n O_n}{S_{D1} + S_{D2} + \ldots\ldots + S_{DL} + M_1(1 - O_1) + M_2(1 - O_2) + \ldots + M_n(1 - O_n)}$$

O_T (Total Organic Content) = $M_1O_1 + M_2O_2 + \ldots\ldots\ldots + M_nO_n$

Where:

O_T = Total organic material in the binder system(s) used during the averaging period, in kilograms (or lbs).

O_1 = The organic ratio of the first binder formulation used during the averaging period, expressed in kilograms organic compounds per kg. of binder (lb/lb).

O_2 = The organic ratio of the second binder formulation used during the averaging period, expressed in kilograms organic compounds per kg. of binder (lb/lb).

O_n = The organic ratio of the very last binder formulation used during the averaging period, expressed in kilograms organic compounds per kg. of binder (lb/lb) when a total of "n" formulations were used.

M_1 = The total mass, used throughout the period, of the first binder formulation used that period, expressed in kg. or lb.

M_2 = The total mass used throughout the period, of the second binder formulation used that period, in kg. or lb.

M_n = The total mass, used throughout the period, of the very last binder formulation used that period, when a total of "n" formulations were used, expressed in kg. or lb.

S_{D1} = The mass of sand used in day one of the averaging period.

S_{D2} = The mass of sand used in day two of the averaging period.

S_{DL} = The mass of sand used on the last day of the averaging period.

503.7 Daily-Weighted Average VOC Content of Mold Washes: The daily weighted average VOC content of all the mold-wash used facility-wide during a facility-specified workday, a quantification required in order to comply with subsection 301.3b, shall be calculated using the following equation and be expressed in grams of VOC per liter of mold-wash (or lbs./gal).

$$VOC_W = \frac{V_1C_1 + V_2C_2 + \ldots + V_nC_n + M_{va}}{V_1 + V_2 + \ldots V_n + V_{va} + V_{sa}}$$

Where:

VOCw = The daily-weighted average VOC content of all "n" mold-wash formulations ("a" through "n") used during a workday throughout the facility expressed in grams of VOC per liter of mold-wash (or lb/gal).

C1 = The VOC content of the first mold-wash formulation used during a workday in grams per liter of mold-wash (lb/gal).

C2 = The VOC content of the second mold-wash formulation used during a workday, in grams per liter of mold-wash (or lb/gal).

Cn = The VOC content of the very last mold-wash formulation used during a workday when a total of "n" formulations were used, and the only formulation remaining to be accounted for. It is expressed in grams VOC per liter of mold-wash-formulation "n" (or lb/gal).

Mva = The total mass of VOC added to any previously formulated mold-wash used during the course of this workday not otherwise accounted for in VOC-content of formulations (expressed in grams or lbs). This includes the VOC portion of added materials which also contain non-VOC components.

V1 = The total volume used throughout the workday of the first mold-wash formulation used that day, expressed in liters (or gal).

V2 = The total volume used throughout the workday of the second mold-wash formulation used that day, in liters (or gal).

Vn = The total volume used throughout the workday of the very last mold-wash formulation used that workday, when a total of "n" formulations were used. It is expressed in liters (or gal) of formulation "n".

Vva = The total volume of VOC in liters (or gal) added to any and all previously formulated mold-wash during the course of this workday for make-up, viscosity reducing, or other purpose(s), not otherwise accounted for in the VOC-content of formulations.

Vsa = The total volume of solids in liters (or gal) added during a workday to any already formulated mold-washes used during the workday such solids are added.

REGULATION III – CONTROL OF AIR CONTAMINANTS

RULE 348
AEROSPACE MANUFACTURING AND REWORK OPERATIONS

INDEX

SECTION 100 – GENERAL

101 PURPOSE

102 APPLICABILITY

SECTION 200 – DEFINITIONS

201 ABLATIVE COATING

202 ADHESION PROMOTER

203 ADHESIVE BONDING PRIMER

204 AEROSOL COATING

205 AEROSPACE VEHICLE OR COMPONENT

206 AIRCRAFT FLUID SYSTEMS

207 AIRCRAFT TRANSPARENCY

208 ANTICHAFE COATING

209 ANTIQUE AEROSPACE VEHICLE OR COMPONENT

210 AQUEOUS CLEANING SOLVENT

211 BONDING MASKANT

212 CHEMICAL AGENT-RESISTANT COATING (CARC)

213 CHEMICAL MILLING MASKANT

214 CLEANING OPERATION

215 CLEANING SOLVENT

216 CLEAR COATING

217 CLOSED-CYCLE DEPAINTING SYSTEM

218 COATING

219 COATING OPERATION

220 COATING UNIT

221 COMMERCIAL EXTERIOR AERODYNAMIC STRUCTURE PRIMER

222 COMMERCIAL INTERIOR ADHESIVE

223 COMPATIBLE SUBSTRATE PRIMER

224 CONFINED SPACE

225 CORROSION PREVENTION SYSTEM

226 CRITICAL USE AND LINE SEALER MASKANT

227 CRYOGENIC FLEXIBLE PRIMER

228 CRYOPROTECTIVE COATING

229 CYANOACRYLATE ADHESIVE

230 ELECTRIC OR RADIATION-EFFECT COATING

231 ELECTROSTATIC DISCHARGE AND ELECTROMAGNETIC INTERFERENCE (EMI) COATING

232 ELEVATED TEMPERATURE SKYDROL RESISTANT COMMERCIAL PRIMER

233 EMISSION CONTROL SYSTEM (ECS)

234 EPOXY POLYAMIDE TOPCOAT

235 FIRE-RESISTANT (INTERIOR) COATING

236 FLEXIBLE PRIMER

237 FLIGHT TEST COATING

238 FLUSH CLEANING

239 FUEL TANK ADHESIVE

240 FUEL TANK COATING

241 GENERAL AVIATION

242 GENERAL AVIATION REWORK FACILITY

243 GRAMS PER LITER VOC

244 HAND-WIPE CLEANING OPERATION

245 HIGH TEMPERATURE COATING

246 HIGH VOLUME LOW PRESSURE (HVLP) SPRAY EQUIPMENT

247 INSULATION COVERING

248 INTERMEDIATE RELEASE COATING

249 LACQUER

250 LEAK

251 LIMITED ACCESS SPACE

252 METALIZED EPOXY COATING

253 MOLD RELEASE

254 NONSTRUCTURAL ADHESIVE

255 OPERATING PARAMETER VALUE

256 OPTICAL ANTI-REFLECTION COATING

257 PART MARKING COATING
258 PRETREATMENT COATING
259 PRIMER
260 RADOME
261 RAIN EROSION-RESISTANT COATING
262 RESEARCH AND DEVELOPMENT
263 RESIN SURFACE SEALER
264 ROCKET MOTOR BONDING ADHESIVE
265 ROCKET MOTOR NOZZLE COATING
266 RUBBER-BASED ADHESIVE
267 SCALE INHIBITOR
268 SCREEN PRINT INK
269 SEAL COAT MASKANT
270 SEALANT
271 SELF-PRIMING TOPCOAT
272 SEMI-AQUEOUS CLEANING SOLVENT
273 SILICONE INSULATION MATERIAL
274 SOLID FILM LUBRICANT
275 SOLIDS
276 SPACE VEHICLE
277 SPECIALIZED FUNCTION COATING
278 SPECIALTY COATING
279 SPRAY GUN
280 STRUCTURAL AUTOCLAVABLE ADHESIVE
281 STRUCTURAL NONAUTOCLAVABLE ADHESIVE
282 SURFACE PREPARATION
283 TEMPORARY PROTECTIVE COATING
284 THERMAL CONTROL COATING
285 TOPCOAT
286 TOUCH-UP AND/OR REPAIR OPERATIONS
287 VOC COMPOSITE PARTIAL VAPOR PRESSURE
288 WATERBORNE (WATER-REDUCIBLE) COATING
289 WET FASTENER INSTALLATION COATING

290 WING COATING

SECTION 300 – STANDARDS

301 LIMITATIONS–VOC EMISSIONS

302 EMISSION CONTROL SYSTEM

303 REQUIREMENTS FOR AIR POLLUTION CONTROL EQUIPMENT

304 APPLICATION EQUIPMENT

305 SOLVENT CLEANING

306 SPRAY GUN CLEANING

307 VOC CONTAINMENT AND DISPOSAL

308 EXEMPTIONS

SECTION 400 – ADMINISTRATIVE REQUIREMENTS

401 COMPLIANCE SCHEDULE

SECTION 500 – MONITORING AND RECORDS

501 RECORDKEEPING AND REPORTING

502 COMPLIANCE DETERMINATION

Adopted 04/07/99
Revised 09/25/13

MARICOPA COUNTY
AIR POLLUTION CONTROL REGULATIONS

REGULATION III – CONTROL OF AIR CONTAMINANTS

RULE 348
AEROSPACE MANUFACTURING AND REWORK OPERATIONS

SECTION 100 – GENERAL

101 **PURPOSE:** To limit the emission of volatile organic compounds (VOCs) from the manufacture and rework of aerospace vehicles and their components.

102 **APPLICABILITY:** This rule applies to the manufacture or rework of commercial, civil, or military aerospace vehicles. This rule does not apply to research and development, quality control, laboratory testing, electronic parts and assemblies (except for cleaning and coating of completed assemblies) and to rework operations performed on antique aerospace vehicles or components or space vehicles.

SECTION 200 – DEFINITIONS: For the purpose of this rule, the following definitions shall apply, in addition to those definitions found in Rule 100 (General Provisions and Definitions) of these rules. In the event of any inconsistency between any of the Maricopa County air pollution control rules, the definitions in this rule take precedence.

201 **ABLATIVE COATING:** A coating that chars when exposed to open flame or extreme temperatures, as would occur during the failure of an engine casing or during aerodynamic heating. The ablative char surface serves as an insulative barrier, protecting adjacent components from the heat or open flame.

202 **ADHESION PROMOTER:** A very thin coating applied to a substrate to promote wetting and form a chemical bond with the subsequently applied material.

203 **ADHESIVE BONDING PRIMER:** A primer applied in a thin film to aerospace components for the purpose of corrosion inhibition and increased adhesive bond strength by attachment. There are two categories of adhesive bonding primers, primers with a design cure at 250°F or below and primers with a design cure above 250°F.

204 **AEROSOL COATING:** A hand-held, pressurized, nonrefillable container that expels an adhesive or a coating in a finely divided spray when a valve on the container is depressed.

205 **AEROSPACE VEHICLE OR COMPONENT:** Any fabricated part, processed part, assembly of parts, or completed unit, with the exception of electronic components, of any aircraft, including but not limited to airplanes, helicopters, missiles, rockets, and space vehicles.

206 **AIRCRAFT FLUID SYSTEMS:** Those systems that handle hydraulic fluids, fuel, cooling fluids, or oils.

207 **AIRCRAFT TRANSPARENCY:** The aircraft windshield, canopy, passenger windows, lenses and other components which are constructed of transparent materials.

208 **ANTICHAFE COATING:** A coating applied to areas of moving aerospace components that may rub during normal operations or installation.

209 **ANTIQUE AEROSPACE VEHICLE OR COMPONENT:** An antique aircraft, as defined by 14 CFR Part 45, or components thereof. An antique aerospace vehicle would not routinely be in commercial or military service in the capacity for which it was designed.

210 **AQUEOUS CLEANING SOLVENT:** A solvent in which water is at least 80 percent of the solvent as applied.

211 **BONDING MASKANT:** A temporary coating used to protect selected areas of aerospace parts from strong acid or alkaline solutions during processing for bonding.

212 **CHEMICAL AGENT-RESISTANT COATING (CARC):** An exterior topcoat designed to withstand exposure to chemical warfare agents or the decontaminates used in these agents.

213 **CHEMICAL MILLING MASKANT:** A coating that is applied directly to aluminum components to protect surface areas when chemical milling the component with a Type I or II etchant. This does not include bonding maskants, line sealers, and critical use and seal coat maskants. Additionally, maskants that must be used on an individual part or subassembly with a combination of Type I or II etchants and any of the above types of maskants (e.g., bonding, line sealers, and critical use and seal coat) are not included. Maskants that are defined as specialty coatings are not included under this definition.

214 **CLEANING OPERATION:** Any operation that removes dirt or impurities from aerospace vehicles, components, or coating equipment. This may include spray gun, hand-wipe, and flush cleaning operations.

215 **CLEANING SOLVENT:** A liquid material used for hand-wipe, spray gun, or flush cleaning. This definition excludes solutions that contain VOCs at a concentration less than 0.1% for carcinogenic VOCs or 1.0% for noncarcinogenic VOCs, as determined from manufacturers' representations.

216 **CLEAR COATING:** A transparent coating usually applied over a colored opaque coating, metallic substrate, or placard to give improved gloss and protection to the color coat. In some cases, a clearcoat refers to any transparent coating without regard to substrate.

217 **CLOSED-CYCLE DEPAINTING SYSTEM:** A dust free, automated process that removes permanent coating in small sections at a time, and maintains a continuous vacuum around the area(s) being depainted to capture emissions.

218 **COATING:** A material that is applied to the surface of an aerospace vehicle or component to form a decorative or functional solid film, or the solid film itself.

219 **COATING OPERATION:** Using a spray booth, tank, or other enclosure or any area, such as a hangar, for applying a single type of coating (e.g., primer); using the same spray booth for applying another type of coating (e.g., topcoat) constitutes a separate coating operation for which compliance determinations are performed separately.

220 **COATING UNIT:** A series of one or more coating applicators and any associated drying area and/or oven wherein a coating is applied, dried, and/or cured. A coating unit ends at the point where the coating is dried or cured, or prior to any subsequent application of a different coating. It is not necessary to have an oven or flashoff area to be included in this definition.

221 **COMMERCIAL EXTERIOR AERODYNAMIC STRUCTURE PRIMER:** A primer used on aerodynamic components and structures that protrude from the fuselage, such as wings and attached components, control surfaces, horizontal stabilizers, vertical fins, wing-to-body fairings, antennae, and landing gear and doors, for the purpose of extended corrosion protection and enhanced adhesion.

222 **COMMERCIAL INTERIOR ADHESIVE:** Materials used in the bonding of passenger cabin interior components. These components must meet the FAA fireworthiness requirements.

223 **COMPATIBLE SUBSTRATE PRIMER:** Either compatible Epoxy Primer or Adhesive Primer. Compatible Epoxy Primer is primer that is compatible with the filled elastomeric coating and is epoxy based. The compatible substrate primer is an epoxy-polyamide primer used to promote adhesion of elastomeric coatings such as impact-resistant coatings. Adhesive Primer is a coating that (1) inhibits corrosion and serves as a primer applied to bare metal surfaces or prior to adhesive application, or (2) is applied to surfaces that can be expected to contain fuel. Fuel tank coatings are excluded from this category.

224 **CONFINED SPACE:** A space that (1) is large enough and so configured that an employee can bodily enter and perform assigned work; (2) is limited or restricted for entry or exit (for example, fuel tanks, fuel vessels, and other spaces that have limited entry); and (3) is not suitable for continuous employee occupancy.

225 **CORROSION PREVENTION SYSTEM:** A coating system that provides corrosion protection by displacing water and penetrating mating surfaces, forming a protective barrier between the metal surface and moisture. Coatings containing oils or waxes are excluded from this category.

226 **CRITICAL USE AND LINE SEALER MASKANT:** A temporary coating, not covered under other maskant categories, used to protect selected areas of aerospace parts from strong acid or alkaline solutions such as those used in anodizing, plating, chemical milling and processing of magnesium, titanium, or high strength steel, high precision aluminum chemical milling of deep cuts, and aluminum chemical milling of complex shapes. Materials used for repairs or to bridge gaps left by scribing operations (i.e., line sealer) are also included in this category.

227 **CRYOGENIC FLEXIBLE PRIMER:** A primer designed to provide corrosion resistance, flexibility, and adhesion of subsequent coating systems when exposed to loads up to and surpassing the yield point of the substrate at cryogenic temperatures (-275°F and below).

228 **CRYOPROTECTIVE COATING:** A coating that insulates cryogenic or subcooled surfaces to limit propellant boil-off, maintain structural integrity of metallic structures during ascent or re-entry, and prevent ice formation.

229 **CYANOACRYLATE ADHESIVE:** A fast-setting, single component adhesive that cures at room temperature. Also known as "super glue."

230 **ELECTRIC OR RADIATION-EFFECT COATING:** A coating or coating system engineered to interact, through absorption or reflection, with specific regions of the electromagnetic energy spectrum, such as the ultraviolet, visible, infrared, or microwave regions. Uses include, but are not limited to, lightning strike protection, electromagnetic pulse (EMP) protection, and radar avoidance. Coatings that have been designated "classified" by the Department of Defense are exempt.

231 **ELECTROSTATIC DISCHARGE AND ELECTROMAGNETIC INTERFERENCE (EMI) COATING:** A coating applied to space vehicles, missiles, aircraft radomes, and helicopter blades to disperse static energy or reduce electromagnetic interference.

232 **ELEVATED TEMPERATURE SKYDROL RESISTANT COMMERCIAL PRIMER:** A primer applied primarily to commercial aircraft (or commercial aircraft adapted for military use) that must withstand immersion in phosphate-ester (PE) hydraulic fluid (Skydrol 500b or equivalent) at the elevated temperature of 150°F for 1,000 hours.

233 **EMISSION CONTROL SYSTEM (ECS):** A system, approved in writing by the Control Officer, designed and operated in accordance with good engineering practice to reduce emissions of volatile organic compounds. Such system consists of an emissions collection subsystem and an emissions processing subsystem.

234 **EPOXY POLYAMIDE TOPCOAT:** A coating used where harder films are required or in some areas where engraving is accomplished in camouflage colors.

235 **FIRE-RESISTANT (INTERIOR) COATING:** A coating applied to the interior cabin of an airplane that prevents the interior cabin from being easily ignited and from burning with extreme rapidity.

236 **FLEXIBLE PRIMER:** A primer that meets flexibility requirements such as those needed for adhesive bond primed fastener heads or on surfaces expected to contain fuel.

237 **FLIGHT TEST COATING:** A coating applied to aircraft other than missiles or single-use aircraft prior to flight testing to protect the aircraft from corrosion and to provide required marking during flight test evaluation.

238 **FLUSH CLEANING:** Removal of contaminants such as dirt, grease, oil, and coatings from an aerospace vehicle or component or coating equipment by passing solvent over, into, or through the item being cleaned. The solvent simply may be poured into the item being cleaned and then drained or assisted by air or hydraulic pressure or by pumping. Hand-wipe cleaning operations where wiping, scrubbing, mopping or other hand action are used are not included.

239 **FUEL TANK ADHESIVE:** An adhesive used to bond components exposed to fuel and must be compatible with fuel tank coatings.

240 **FUEL TANK COATING:** A coating applied to fuel tank components for the purpose of corrosion and/or bacterial growth inhibition and to assure sealant adhesion in extreme environmental conditions.

241 **GENERAL AVIATION (GA):** The segment of civil aviation that encompasses all facets of aviation except air carriers, commuters and military. General aviation includes charter and corporate-executive transportation, instruction, rental, aerial application, aerial observation, business, pleasure and other special uses.

242 **GENERAL AVIATION REWORK FACILITY:** Any aerospace facility with the majority of its revenues resulting from the reconstruction, repair, maintenance, repainting, conversion, or alteration of general aviation aerospace vehicles or components.

243 **GRAMS PER LITER VOC:** A weight of VOC per combined volume of VOC and coating solids, less water and exempt compounds, and can be calculated by the following equation:

$$\text{grams per liter} = \frac{W_s - W_w - W_{es}}{V_s - V_w - V_{es}}$$

Where:

W_s = weight of volatile organic compounds in grams

W_w = weight of water in grams

W_{es} = weight of exempt compounds in grams

V_s = volume of material in liters

V_w = volume of water in liters

V_{es} = volume of exempt compounds in liters

244 **HAND-WIPE CLEANING OPERATION:** Removing contaminants such as dirt, grease, oil, and coatings from an aerospace vehicle or component by physically rubbing it with a material such as a rag, paper, or cotton swab that has been moistened with a cleaning solvent. This definition excludes the use of rags or other material used only to dry excess solvent from a part or product after removal from a vat or any other solvent bath.

245 **HIGH TEMPERATURE COATING:** A coating designed to withstand temperatures of more than 350°F.

246 **HIGH VOLUME LOW PRESSURE (HVLP) SPRAY EQUIPMENT:** Spray equipment that is used to apply coating by a spray gun that operates at 10.0 psig of atomizing air pressure or less at the air cap.

247 **INSULATION COVERING:** Material that is applied to foam insulation to protect the insulation from mechanical or environmental damage.

248 **INTERMEDIATE RELEASE COATING:** A thin coating applied beneath topcoats to assist in removing the topcoat in depainting operations and generally to allow the use of less hazardous depainting methods.

249 **LACQUER:** A clear or pigmented coating formulated with a nitrocellulose or synthetic resin to dry by evaporation without a chemical reaction. Lacquers are resoluble in their original solvent.

250 **LEAK:** A liquid that is allowed to seep or drip or to otherwise enter or escape in either of the following ways:

a. Three or more drops, including misting and clouding; or

b. A puddle greater than one square inch.

251 **LIMITED ACCESS SPACE:** Internal surfaces or passages of an aerospace vehicle or component that cannot be reached without the aid of an airbrush or a spray gun extension for the application of coatings.

252 **METALIZED EPOXY COATING:** A coating that contains relatively large quantities of metallic pigmentation for appearance and/or added protection.

253 **MOLD RELEASE:** A coating applied to a mold surface to prevent the molded piece from sticking to the mold as it is removed.

254 **NONSTRUCTURAL ADHESIVE:** An adhesive that bonds nonload bearing aerospace components in noncritical applications and is not covered in any other specialty adhesive categories.

255 **OPERATING PARAMETER VALUE:** A minimum or maximum value established for a control equipment or process parameter that, if achieved by itself or

in combination with one or more other operating parameter values, determines that an owner or operator has complied with an applicable emission limitation.

256 **OPTICAL ANTI-REFLECTION COATING:** A coating with a low reflectance in the infrared and visible wavelength ranges that is used for antireflection on or near optical and laser hardware.

257 **PART MARKING COATING:** Coatings or inks used to make identifying markings on materials, components, and/or assemblies. These markings may be either permanent or temporary.

258 **PRETREATMENT COATING:** An organic coating that contains at least 0.5 percent acids by weight and is applied directly to metal surfaces to provide surface etching, corrosion resistance, adhesion, and ease of stripping.

259 **PRIMER:** The first layer and any subsequent layers of identically formulated coating applied to the surface of an aerospace vehicle or component. Primers are typically used for corrosion prevention, protection from the environment, functional fluid resistance, and adhesion of subsequent coatings. Primers that are defined as specialty coatings are not included under this definition.

260 **RADOME:** The nonmetallic protective housing for electromagnetic transmitters and receivers (e.g., radar, electronic countermeasures, etc.).

261 **RAIN EROSION-RESISTANT COATING:** A coating or coating system used to protect the leading edges of parts such as flaps, stabilizers, radomes, engine inlet nacelles, etc. against erosion caused by rain impact during flight.

262 **RESEARCH AND DEVELOPMENT:** An operation whose primary purpose is for research and development of new processes and products and that is conducted under the close supervision of technically trained personnel and is not involved in the manufacture of final or intermediate products for commercial purposes, except in a de minimis manner.

263 **RESIN SURFACE SEALER:** A coating designed or intended to seal the pores of high porosity cast surfaces of aerospace components composed of magnesium, aluminum or their alloys to prevent corrosion.

264 **ROCKET MOTOR BONDING ADHESIVE:** An adhesive used in rocket motor bonding applications.

265 **ROCKET MOTOR NOZZLE COATING:** A catalyzed epoxy coating system used in elevated temperature applications on rocket motor nozzles.

266 **RUBBER-BASED ADHESIVE:** A quick setting contact cement that provides a strong, yet flexible bond between two mating surfaces that may be of dissimilar materials.

267 **SCALE INHIBITOR:** A coating that is applied to the surface of a part prior to thermal processing to inhibit the formation of scale.

268 **SCREEN PRINT INK:** Inks used in screen printing processes during fabrication of decorative laminates and decals.

269 **SEAL COAT MASKANT:** An overcoat applied over a maskant to improve abrasion and chemical resistance during production operations.

270 **SEALANT:** A material used to prevent the intrusion of water, fuel, air, or other liquids or solids from certain areas of aerospace vehicles or components. There are two categories of sealants: extrudable/rollable/brushable sealants and sprayable sealants.

271 **SELF-PRIMING TOPCOAT:** A topcoat that is applied directly to an uncoated aerospace vehicle or component for purposes of corrosion prevention, environmental protection, and functional fluid resistance. More than one layer of identical coating formulation may be applied to the vehicle or component. The coating is not subsequently topcoated with any other product formulation.

272 **SEMIAQUEOUS CLEANING SOLVENT:** A solvent wherein at least 60% of the solvent solution as applied must be water.

273 **SILICONE INSULATION MATERIAL:** An insulating material applied to exterior metal surfaces for protection from high temperatures caused by atmospheric friction or engine exhaust. These materials differ from ablative coatings in that they are not "sacrificial."

274 **SOLID FILM LUBRICANT:** A very thin coating consisting of a binder system containing as its chief pigment material one or more of the following: molybdenum, graphite, polytetrafluoroethylene (PTFE), or other solids that act as a dry lubricant between faying surfaces.

275 **SOLIDS:** The nonvolatile portion of the coating that after drying makes up the dry film.

276 **SPACE VEHICLE:** A man-made device, either manned or unmanned, designed for operation beyond earth's atmosphere. This definition includes integral equipment such as models, mock-ups, prototypes, molds, jigs, tooling, hardware jackets, and test coupons. Also included is auxiliary equipment associated with test, transport, and storage that through contamination can compromise the space vehicle performance.

277 **SPECIALIZED FUNCTION COATING:** A coating that fulfills extremely specific engineering requirements that are limited in application and are characterized by low volume usage. This category excludes coatings covered in other Specialty Coating categories.

278 **SPECIALTY COATING:** A coating that, even though it meets the definition of a primer, topcoat, or self-priming topcoat, has additional performance criteria beyond

those of primers, topcoats, and self-priming topcoats for specific applications. These performance criteria may include, but are not limited to, temperature or fire resistance, substrate compatibility, antireflection, temporary protection or marking, sealing, adhesively joining substrates, or enhanced corrosion protection.

279 **SPRAY GUN:** A device that atomizes a coating or other material and projects the particulates or other material onto a substrate.

280 **STRUCTURAL AUTOCLAVABLE ADHESIVE:** An adhesive used to bond load carrying aerospace components that is cured by heat and pressure in an autoclave.

281 **STRUCTURAL NONAUTOCLAVABLE ADHESIVE:** An adhesive cured under ambient conditions that is used to bond load carrying aerospace components or other critical functions, such as nonstructural bonding in the proximity of engines.

282 **SURFACE PREPARATION:** The removal of contaminants from the surface of an aerospace vehicle or component or the activation or reactivation of the surface in preparation for the application of a coating.

283 **TEMPORARY PROTECTIVE COATING:** A coating applied to provide scratch or corrosion protection during manufacturing, storage, or transportation. Two types include peelable protective coatings and alkaline removable coatings. These materials are not intended to protect against strong acid or alkaline solutions. Coatings that provide this type of protection from chemical processing are not included in this category.

284 **THERMAL CONTROL COATING:** A coating formulated with specific thermal conductive or radiative properties to permit temperature control of the substrate.

285 **TOPCOAT:** A coating that is applied over a primer on an aerospace vehicle or component for appearance, identification, camouflage, or protection. Topcoats that are defined as specialty coatings are not included under this definition.

286 **TOUCH-UP AND/OR REPAIR OPERATIONS:** That portion of the coating operation that is the incidental application of coating used to cover minor imperfections in the coating finish or to achieve complete coverage. This definition includes out-of-sequence or out-of-cycle coating.

287 **VOC COMPOSITE PARTIAL VAPOR PRESSURE:** The sum of the partial pressures of the compounds defined as VOC's and is determined by the following calculation:

$$PP_s = \frac{\sum_{i=1}^{n} \frac{W_i}{MW_i} \times VP_i}{\frac{W_w}{MW_w} + \frac{W_e}{MW_e} + \sum_{i=1}^{n} \frac{W_i}{MW_i}}$$

Where:

W_i = Weight of the "i"th VOC compound, grams.

W_w = Weight of water, grams.

W_e = Weight of non-HAP, non-VOC compound, grams.

MW_i = Molecular weight of the "i"th VOC compound, g/g-mole.

MW_w = Molecular weight of water, g/g-mole.

MW_e = Molecular weight of exempt compound, g/g-mole.

PP_c = VOC composite partial pressure at 20°C, mm Hg.

VP_i = Vapor pressure of the "i"th VOC compound at 20°C, mm Hg.

288 **WATERBORNE (WATER-REDUCIBLE) COATING:** A coating which contains more than 5 percent water by weight as applied in its volatile fraction.

289 **WET FASTENER INSTALLATION COATING:** A primer or sealant applied by dipping, brushing, or daubing to fasteners that are installed before the coating is cured.

290 **WING COATING:** A corrosion-resistant topcoat that is resilient enough to withstand the flexing of the wings.

SECTION 300 – STANDARDS

301 **LIMITATIONS: VOC EMISSIONS:** No person shall apply any surface coating including any VOC-containing materials added to the original coating supplied by the manufacturer, which contain VOC in excess of the limits in Tables 1a and 1b, unless the emissions are controlled in accordance with the provisions of Section 302 of this rule.

Table 1a

PRIMER or TOPCOAT TYPE	VOC LIMITS (g/L)
All Primers (except Specialty or General Aviation Rework Facility Primers)	350 g/l
All Topcoats (except Specialty or General Aviation Rework Facility Topcoats)	420 g/l
General Aviation Rework Facility Primers	540 g/l
General Aviation Rework Facility Topcoats	540 g/l

Table 1b

Type of Specialty Coating	VOC Limits (g/L)
Ablative Coating	600
Adhesion Promoter	890

Type of Specialty Coating	VOC Limits (g/L)
Adhesive Bonding Primers: Cured at 250°F or below	850
Adhesive Bonding Primers: Cured above 250°F	1030
Adhesives: Commercial Interior	760
Adhesives: Cyanoacrylate	1,020
Adhesives: Fuel Tank	620
Adhesives: Nonstructural	360
Adhesives: Rocket Motor Bonding	890
Adhesives: Rubber-based	850
Adhesives: Structural Autoclavable	60
Adhesives: Structural Nonautoclavable	850
Antichafe Coating	660
Bearing Coating Compounds	620
Caulking and Smoothing Compounds	850
Chemical Agent-Resistant Coating	550
Clear Coating	720
Commercial Exterior Aerodynamic Structure Primer	350
Compatible Substrate Primer	350
Corrosion Prevention Compound	710
Cryogenic Flexible Primer	350
Cryoprotective Coating	600
Coatings Related To Electromagnetism And/Or Other Radiation Electric Or Radiation-Effect Coating	600
Electrostatic Discharge and Electromagnetic Interference (EMI) Coating	800
Elevated Temperature Skydrol Resistant Commercial Primer	350
Epoxy Polyamide Topcoat	420
Fire-Resistant (Interior) Coating	800
Flexible Primer	350
Flight-Test Coatings: Missile or Single Use Aircraft	420
Flight-Test Coatings: All Other	840
Fuel-Tank Coating	720
High-Temperature Coating	850
Insulation Covering	740
Intermediate Release Coating	750
Lacquer	830
Maskant: Bonding Maskant	420
Maskant: Critical Use and Line Sealer Maskant	420
Maskant: Seal Coat Maskant	420
Metallized Epoxy Coating	740
Mold Release	780
Optical Anti-Reflective Coating	750
Part Marking Coating	850
Pretreatment Coating	780
Rain Erosion-Resistant Coating	420

Type of Specialty Coating	VOC Limits (g/L)
Resin Surface Sealer	695
Rocket Motor Nozzle Coating	660
Scale Inhibitor	880
Screen Print Ink	840
Sealants: Extrudable/Rollable/Brushable Sealant	240
Sealants: Sprayable Sealant	600
Self-priming Topcoat	420
Silicone Insulation Material	850
Solid Film Lubricant	880
Specialized Function Coating	890
Temporary Protective Coating	250
Thermal Control Coating	800
Wet Fastener Installation Coating	675
Wing Coating	420

302 EMISSION CONTROL SYSTEM: As an alternative to meeting the applicable coating VOC limits set forth in Section 301, an operator can comply with this rule by operating an Emission Control System (ECS) approved by the Control Officer, provided that the control system has a combined VOC emissions capture and control equipment efficiency of at least 81 percent by weight.

303 REQUIREMENTS FOR AIR POLLUTION CONTROL EQUIPMENT:

303.1 Operation and Maintenance (O&M) Plan Required for ECS:

a. An owner or operator shall provide and maintain (an) O&M Plan(s) for any ECS, any other emission processing equipment, and any ECS monitoring devices that are used pursuant to this rule or to an air pollution control permit.

b. The owner or operator shall submit to the Control Officer for approval the O&M Plans of each ECS and each ECS monitoring device that is used pursuant to this rule.

c. An owner or operator of a facility that is required to have an O&M Plan pursuant to this subsection must fully comply with all O&M Plans that the owner or operator has submitted for approval, but which have not yet been approved, unless notified otherwise by the Control Officer in writing.

304 APPLICATION EQUIPMENT: A person shall use one or more of the following application techniques in applying any primer or topcoat to aerospace vehicles or components: flow/curtain coat; dip coat; roll coating; brush coating; cotton-tipped swab application; electrodeposition (DIP) coating; high volume low pressure (HVLP) spraying; electrostatic spray; or other coating application methods that can

demonstrate and be approved by the Control Officer as having at least a 65% transfer efficiency, which is equivalent to the transfer efficiency of HVLP or electrostatic spray application methods.

305 SOLVENT CLEANING: The following requirements apply to solvent cleaning operations:

305.1 Hand-Wipe Cleaning: Cleaning solvents used in hand-wipe cleaning operations shall utilize an aqueous cleaning solvent, or have a VOC composite vapor pressure less than or equal to 45 millimeters of mercury (mm Hg) at 20°C.

305.2 Flush Cleaning: For cleaning solvents used in the flush cleaning of parts, assemblies, and coating unit components, the used cleaning solvent (except for semi-aqueous cleaning solvents) must be emptied into an enclosed container or collection system that is kept closed when not in use or captured with wipers, provided they comply with the VOC handling requirements of Section 307 of this rule.

305.3 Dip Cleaning: Dip cleaning using solvents is subject to the requirements of Rule 331.

306 SPRAY GUN CLEANING: All spray guns must be cleaned by one or more of the following methods:

306.1 Enclosed spray gun cleaning system, provided that it is kept closed when not in use and leaks are repaired within 14 days from when the leak is first discovered. If the leak is not repaired by the 15th day after detection, the solvent shall be removed and the enclosed cleaner shall be shut down until the leak is repaired or its use is permanently discontinued;

306.2 Unatomized discharge of solvent into a waste container that is kept closed when not in use;

306.3 Disassembly of the spray gun and cleaning in a vat that is kept closed when not in use; or

306.4 Atomized spray into a waste container that is fitted with a device designed to capture atomized solvent emissions.

307 VOC CONTAINMENT AND DISPOSAL: All fresh and used VOC containing material, including but not limited to cleaning solvents, coatings, thinners, rags, and their residues, shall be stored in closed, leak free, legibly labeled containers when not in use. In addition, the owner or operator must implement handling and transfer procedures to minimize spills during filling and transferring the cleaning solvent to or from enclosed systems, vats, waste containers, and other cleaning operation equipment that hold or store fresh or used cleaning solvents.

308 EXEMPTIONS:

308.1 Coatings: The following coatings types are exempted from the VOC limits set forth in Tables 1a and 1b in Section 301 of this rule:

a. Touchup coatings;

b. Hand-held aerosol can operations;

c. DOD "classified" coatings;

d. Coating of space vehicles; and

e. Low usage coatings used in separate formulations in volumes of less than 50 gallons per year with a maximum exemption of 200 gallons total for such formulations applied annually.

308.2 Application Equipment: The following operations are exempt from the requirements of Section 304 of this rule:

a. Any situation that normally requires the use of an airbrush or an extension on the spray gun to properly reach limited access spaces;

b. The application of specialty coatings;

c. The application of coatings that contain fillers that adversely affect atomization with HVLP spray guns and that the permitting agency has determined cannot be applied by any of the application methods;

d. The application of coatings that normally have a dried film thickness of less than 0.0013 centimeter (0.0005 in.) and that the permitting agency has determined cannot be applied by any of the application methods;

e. The use of airbrush application methods for stenciling, lettering, and other identification markings; and

f. Touch-up and repair operations.

308.3 Solvent Cleaning Operations: The following are exempt from the requirements of Section 305 of this rule:

a. Cleaning during the manufacture, assembly, installation, maintenance, or testing of components of breathing oxygen systems that are exposed to the breathing oxygen;

b. Cleaning during the manufacture, assembly, installation, maintenance, or testing of parts, subassemblies, or assemblies that are exposed to strong oxidizers or reducers (e.g., nitrogen tetroxide, liquid oxygen, hydrazine);

c. Cleaning and surface activation prior to adhesive bonding;

d. Cleaning of electronics parts and assemblies containing electronics parts;

e. Cleaning of aircraft and ground support equipment fluid systems that are exposed to the fluid, including air-to-air heat exchangers and hydraulic fluid systems;

f. Cleaning of fuel cells, fuel tanks, and confined spaces;

g. Surface cleaning of solar cells, coated optics, and thermal control surfaces;

h. Cleaning during fabrication, assembly, installation, and maintenance of upholstery, curtains, carpet, and other textile materials used on the interior of the aircraft;

i. Cleaning of metallic and nonmetallic materials used in honeycomb cores during the manufacture or maintenance of these cores, and cleaning of the completed cores used in the manufacture of aerospace vehicles or components;

j. Cleaning of aircraft transparencies, polycarbonate, or glass substrates;

k. Cleaning and solvent usage associated with research and development, quality control, or laboratory testing;

l. Cleaning operations using nonflammable liquids conducted within 5 feet of energized electrical systems. Energized electrical systems means any AC or DC electrical circuit on an assembled aircraft once electrical power is connected, including interior passenger and cargo areas, wheel wells and tail sections; and

m. Cleaning operations identified in an Essential Use Waiver which has been reviewed and approved by the U.S. EPA and the voting parties of the International Montreal Protocol Committee [sections 604(d)(1) and (g)(2) of the Act].

308.4 **General Exemptions:** Cotton-tipped swabs used for very small cleaning operations and aqueous cleaning solvents are exempt from the requirements of Section 307 of this rule.

308.5 **Small Sources:** Sections 301 and 302 of this rule shall not apply to any one facility from which the total VOC emissions from all operations subject to this rule emit less than 15 pounds (6.8 kg) per day and less than two tons (1814 kg) per year of VOCs prior to any controls.

SECTION 400 – ADMINISTRATIVE REQUIREMENTS

401 **COMPLIANCE SCHEDULE:** All facilities subject to this rule shall meet all applicable provisions of this rule by October 4, 1999. The intention to use an ECS in

accordance with Section 302 of this rule shall be announced to the Control Officer in writing by July 6, 1999, and be in use by April 7, 2000.

SECTION 500 – MONITORING AND RECORDS

501 RECORDKEEPING AND REPORTING: Any person subject to this rule shall comply with the following requirements. Records shall be retained for five years and shall be made available to the Control Officer upon request.

501.1 Coatings: Each owner or operator using coatings listed in Section 301 of this rule shall maintain a current list of coatings in use, VOC content as applied and records of the monthly usage of such materials in pounds per gallon or grams per liter.

501.2 Cleaning Solvents: Each owner or operator shall:

a. Maintain a current list of all aqueous and semi-aqueous hand-wipe cleaning solvents used with corresponding water contents.

b. Maintain a current list of all vapor pressure compliant hand-wipe cleaning solvents in use with their respective vapor pressures or, for blended solvents, VOC composite vapor pressures and records of the monthly usage of such cleaning solvents.

c. Maintain a current list of all hand-wipe cleaning processes using cleaning solvents with a vapor pressure greater than 45 mm Hg and records of the monthly usage of such cleaning solvents.

501.3 Enclosed Spray Gun Cleaners: Any person using an enclosed spray gun cleaner shall visually inspect the seals and all other potential sources of leaks at least once per month while the spray gun cleaner is in operation. Records of these inspections shall be kept and made available upon request by the Control Officer.

502 COMPLIANCE DETERMINATION: The test methods for those subparts of 40 CFR Part 60, Appendix A adopted as of July 1, 1998, as listed below, are adopted by reference as indicated. These adoptions by reference include no future editions or amendments. Copies of test methods referenced in subsection 502.1 are available at the Maricopa County Air Quality Department, 1001 N. Central Ave., Phoenix, AZ, 85004. When more than one test method is permitted for a determination, an exceedance of the limits established in the rule determined by any of the applicable test methods constitutes a violation of this rule.

502.1 Test Methods:

a. Coatings: The VOC content of coatings (less water and less non-precursor organic compounds) as applied shall be determined by manufacturer's supplied data or Method 24 of 40 CFR part 60, Appendix A. If there is a discrepancy between the manufacturer's formulation data

and the results of the Method 24 analysis, compliance shall be based on the results from the Method 24 analysis. For waterborne (water-reducible) coatings, only manufacturer's supplied data can be used to determine the VOC content of each formulation.

b. **Control Equipment:** Measurements of VOC emissions from control equipment shall be conducted in accordance with EPA Methods 18, 25, and/or 25A, 40 CFR 60, Appendix A.

REGULATION III – CONTROL OF AIR CONTAMINANTS

RULE 349
PHARMACEUTICAL, COSMETIC AND VITAMIN MANUFACTURING OPERATIONS

INDEX

SECTION 100 – GENERAL

101 PURPOSE

102 APPLICABILITY

SECTION 200 – DEFINITIONS

201 COATING

202 CONDENSER

203 COSMETIC PRODUCTS

204 COSMETICS MANUFACTURING FACILITY

205 EMISSION CONTROL SYSTEM (ECS)

206 EXEMPT COMPOUNDS

207 IN-PROCESS TANK

208 PHARMACEUTICAL MANUFACTURING FACILITY

209 PHARMACEUTICAL PRODUCTS

210 REACTOR

211 TOTAL VOC-VAPOR PRESSURE (VOC COMPOSITE PARTIAL PRESSURE)

SECTION 300 – STANDARDS

301 REACTORS, DISTILLATION COLUMNS, CRYSTALLIZERS & CENTRIFUGES

302 IN-PROCESS TANKS

303 SEPARATION OPERATIONS

304 STERILIZERS

305 AIR DRYERS

306 TABLET COATING

307 BULK LOADING

308 STORAGE TANKS

309 OPERATING REQUIREMENTS

310 SURFACE PREPARATION AND CLEANUP SOLVENT

311 STORAGE AND DISPOSAL OF VOC

312 REQUIREMENTS FOR AIR POLLUTION CONTROL EQUIPMENT
313 EXEMPTIONS

SECTION 400 – ADMINISTRATIVE REQUIREMENTS

401 COMPLIANCE SCHEDULE

SECTION 500 – MONITORING AND RECORDS

501 RECORDKEEPING AND REPORTING
502 COMPLIANCE DETERMINATION–TEST METHODS
503 CONDENSER TEMPERATURE
504 FORMULA FOR VOC VAPOR PRESSURE

Adopted 12/16/98
Revised 04/07/99
Revised 09/25/13

MARICOPA COUNTY
AIR POLLUTION CONTROL REGULATIONS

REGULATION III – CONTROL OF AIR CONTAMINANTS

RULE 349
PHARMACEUTICAL, COSMETIC AND VITAMIN MANUFACTURING OPERATIONS

SECTION 100 – GENERAL

101 **PURPOSE:** To limit the emission of volatile organic compounds from pharmaceutical, cosmetic and vitamin manufacturing operations.

102 **APPLICABILITY:** The provisions of this rule shall apply to the manufacture and/or blending of materials to make pharmaceutical, or cosmetic products or vitamins, including any process that is incidental to such operations, such as tablet coating and finishing.

SECTION 200 – DEFINITIONS: For the purpose of this rule, the following definitions shall apply, in addition to those definitions found in Rule 100 (General Provisions and Definitions) of these rules. In the event of any inconsistency between any of the Maricopa County air pollution control rules, the definitions in this rule take precedence.

201 **COATING:** A film or thin layer applied to a base material called a substrate.

202 **CONDENSER:** A device that cools a gas stream to a temperature which removes specific organic compounds by condensation.

203 **COSMETIC PRODUCTS:** Any material described by the Standard Industrial Classification (SIC) Code 284, as incorporated by reference in subsection 502.1 of this rule.

204 **COSMETICS MANUFACTURING FACILITY:** Any plant producing or blending chemicals for use in cosmetic products and/or manufacturing cosmetic products.

205 **EMISSION CONTROL SYSTEM (ECS):** A system for reducing emissions of organic compounds, consisting of both emissions collection and processing devices which are approved in writing by the Control Officer and are designed and operated in accordance with good engineering practice.

206 **EXEMPT COMPOUNDS:** For the purpose of this rule, the non-VOC, non-aqueous evaporating portion of a formulation; this necessarily includes all non-precursor organic compounds in addition to inorganic liquids and gases.

207 **IN-PROCESS TANK:** Containers used for mixing, blending, heating, reacting, holding, crystallizing, evaporating, or cleaning operations in the manufacture of pharmaceuticals, cosmetics or vitamins.

208 **PHARMACEUTICAL MANUFACTURING FACILITY:** Any plant producing or blending chemicals for use in pharmaceutical products and/or employing chemical processes in the manufacture of pharmaceutical products. This definition includes any and all associated storage tanks, wastewater management units, or components such as pumps, compressors, agitators, pressure relief devices, sampling connection systems, open-ended valves or lines, valves, connectors, and instrumentation systems that are used in the manufacturing of a pharmaceutical product.

209 **PHARMACEUTICAL PRODUCTS:** Any material described by the Standard Industrial Classification (SIC) Code 283, as incorporated by reference in subsection 502.1 of this rule, or any other fermentation, biological or natural extraction, or chemical synthesis product regulated by the Food and Drug Administration, including components (excluding excipients) of pharmaceutical formulations, or intermediates used in the production of a pharmaceutical product.

210 **REACTOR:** A device or vessel in which one or more chemicals or reactants, other than air, are combined or decomposed in such a way that their molecular structures are altered and one or more new organic compounds are formed.

211 **TOTAL VOC-VAPOR PRESSURE (VOC COMPOSITE PARTIAL PRESSURE):** The sum of the partial pressures of the compounds defined as VOCs calculated according to the formula in Section 504 of this rule.

SECTION 300 – STANDARDS:

301 **REACTORS, DISTILLATION COLUMNS, CRYSTALLIZERS & CENTRIFUGES:** No person shall emit more than 6.8 kg (15 lbs) of VOC compounds per day from any reactor, distillation column, crystallizer or centrifuge unless such emissions are reduced by one of the following:

301.1 Surface Condensers designed to reduce VOC emissions and having the outlet gas temperature limited as follows:

TABLE 1

Vapor Pressure of VOC Compounds at 20° C (68° F)	Maximum Condenser Outlet Gas Temp. ° C (°F)
26-52 mmHg (0.5 psi to 1.0 psi)	25 (77)
52-78 mmHg (1.0 psi to 1.5 psi)	10 (50)
78-150 mmHg (1.5 psi to 2.9 psi)	0 (32)
150-300 mmHg (2.9 psi to 5.8 psi)	-15 (5)
over 300 mmHg (over 5.8 psi)	-25 (-13)

301.2 Any other emission control system which is approved in writing by the control officer as having a control efficiency greater than or equal to surface condenser efficiency operated in accordance with subsection 301.1 of this rule.

302 **IN-PROCESS TANKS:** No person shall use any in-process tank(s) for material containing VOC unless it is fitted with a cover or other device provided for the tank which prevents VOC evaporation. The cover or device shall be closed or in place on the tank at all times except during loading or unloading of the tank.

303 **SEPARATION OPERATIONS:** No person shall emit more than 15 kg (33 lbs) or more of VOC compounds per day from any rotary vacuum filter or any other filter or separation device having an exposed liquid surface where the liquid contains organic compounds with a "Total VOC-Vapor Pressure" of 26 mm Hg (0.5 psia) or more at 20°C (68° F) unless such emissions are reduced by 90 percent on a mass basis.

304 **STERILIZERS:** No person shall emit 15 kg (33 lbs) or more per day of VOCs from any chemical sterilizer unless such emissions are reduced by at least 75 percent on a mass basis.

305 **AIR DRYERS:** No person shall emit 15 kg (33 lbs) or more of VOCs per day from any air dryer unless such emissions are reduced by at least 90 percent by weight.

306 **TABLET COATING**

306.1 **Limitation–VOC Emissions:** No person shall apply any coating to a pharmaceutical tablet with a VOC content in excess of 3.5 pounds of VOC per gallon of coating applied (420 g/l), excluding water, unless the emissions are controlled in accordance with the provision of subsection 306.2.

306.2 **Emission Control System:** As an alternative to meeting the coating limit in subsection 306.1, an owner or operator may comply with this rule by operating an Emissions Control System (ECS) approved by the Control Officer. The ECS shall meet the specifications of either one of the following:

a. The ECS shall have a combined VOC emissions capture and control equipment efficiency of at least 81% by weight, or

b. The ECS shall consist of a surface condenser operated with the outlet gas temperature as specified in Table 1 of subsection 301.1 of this rule.

307 **BULK LOADING:** A person shall not transfer volatile organic liquids having vapor pressures greater than 212 mm Hg (4.1 psia) at 20°C (68° F) from any rail car or tank truck into any storage tank with a capacity greater than 7,500 liters (2,000 gal.) unless organic compound emissions during transfer are reduced by 90 percent by weight.

308 STORAGE TANKS: All storage tanks that store volatile organic liquids with a vapor pressure greater than 78 mm Hg (1.5 psia) at 20 °C (68° F) shall be equipped with pressure/vacuum vents set at a minimum + 2 mm Hg (+ 0.03 psia).

309 OPERATING REQUIREMENTS: An operator shall repair all leaks from which volatile organic liquids can be observed to be dripping or seeping. The repair shall be completed the first time the equipment is off-line for a period long enough to complete the repair. The nature of the repair should be recorded in the O&M Plan.

310 SURFACE PREPARATION AND CLEANUP SOLVENT:

310.1 A person shall use closed containers for the storage or disposal of cloth or paper used for solvent surface preparation and cleanup.

310.2 A person shall store fresh or spent solvent in closed containers.

311 STORAGE AND DISPOSAL OF VOC:

311.1 All storage of VOC-containing materials subject to evaporation, including the storage of waste solvent and waste solvent residues, shall at all times be in closed containers except when contents are added or removed.

311.2 Containers shall be legibly labeled with their contents.

312 REQUIREMENTS FOR AIR POLLUTION CONTROL EQUIPMENT:

312.1 Operation and Maintenance (O&M) Plan Required for ECS:

a. An owner or operator shall provide and maintain (an) O&M Plan(s) for any ECS, any other emission processing equipment, and any ECS monitoring devices that are used pursuant to this Rule 349 or to an air pollution control permit.

b. The owner or operator shall submit to the Control Officer for approval the O&M Plans of each ECS and each ECS monitoring device that is used pursuant to this rule.

312.2 Providing and Maintaining ECS Monitoring Devices: Any person incinerating, adsorbing, or otherwise processing VOC emissions pursuant to this rule shall provide, properly install and maintain in calibration, in good working order and in operation, devices described in the facility's O&M Plan that indicate temperatures, pressures, rates of flow, or other operating conditions necessary to determine if air pollution control equipment is functioning properly and is properly maintained.

312.3 O&M Plan Responsibility: An owner or operator of a facility that is required to have an O&M Plan pursuant to subsection 312.1 must fully comply with all O&M Plans that the owner or operator has submitted for

approval, but which have not yet been approved, unless notified otherwise by the Control Officer in writing.

313 EXEMPTIONS

313.1 Small Sources: Sections 301, 302 303, 304, 305 and 306 of this rule shall not apply to any one facility from which the total VOC emissions from all operations subject to this rule emits less than 15 pounds (6.8 kg) per day and less than two tons (1814 kg) per year of volatile organic compounds.

313.2 Condenser Temperature: If the operation of a condenser at the exit temperature specified in Table 1 of subsection 301.1 of this rule results in freezing and consequent plugging of the condenser, the allowable exit temperature may be raised to a maximum of 2°C above the freezing point of the volatile organic compound.

SECTION 400 – ADMINISTRATIVE REQUIREMENTS

401 COMPLIANCE SCHEDULE

401.1 Effective Date: Except as provided in this section, the provisions of this Rule 349 become effective on July 1, 1999. The owner or operator shall notify the Control Officer in writing by March 16, 1999, if an ECS in accordance with subsection 306.2 will be used to comply with this rule. The ECS shall be in use by December 16, 1999.

SECTION 500 – MONITORING AND RECORDS

501 RECORDKEEPING AND REPORTING: Records shall be retained for five years and shall be made available to the Control Officer upon request. Any person subject to this rule shall comply with the following requirements:

501.1 Current List

a. **Solvents:** Maintain a current list of solvents; state the VOC content of each in pounds per gallons or grams per liter. The VOC content of solvents and any liquids used as cleaning or degreasing agents shall be stated with exempt compounds such as water and non-precursors included.

b. **Vapor Pressure:** A facility subject to total VOC vapor-pressure limits shall have on site in one of the following forms the identified value of the total VOC vapor-pressure for each subject solvent being used: a manufacturer's technical data sheet, a manufacturer's safety data sheet (MSDS), or actual test results.

c. **Coatings:** Maintain a current list of coatings in use and the amount of VOCs applied.

501.2 Usage Records: Maintain monthly records showing the type and amount of each VOC containing material used and coatings applied except for materials arriving on-site with less than 2% VOC by weight.

502 COMPLIANCE DETERMINATION AND TEST METHODS: When more than one test method is permitted for determination, an exceedance of the limits by any of the applicable test methods constitutes a violation of this rule.

502.1 Compliance Determination: The following methods shall be used to determine compliance with this rule:

a. Measurement of VOC emissions from a control device shall be conducted in accordance with USEPA Test Method 25 or 25A (40 CFR 60, Appendix A). USEPA Test Method 18 shall be used to determine emissions of exempt compounds if the Control Officer requires that such determinations need to be made.

b. VOC content of materials having more than 10% solids by volume shall be determined using the applicable EPA Reference Method 24 or 24A (40 CFR Part 60, Appendix A). The Control Officer may use manufacturers' data sheets for routine and uncontested determination of VOC content.

c. The VOC content of solutions, dispersions, and emulsions that have no solids or less than 5% solids shall be determined by the April 15, 1992, amended Method 31 of California's Bay Area Air Quality Management District, "Determination of Volatile Organic Compounds in Paint Strippers, Solvent Cleaners, and Low Solids Coatings."

d. Solid-free solutions, in which all organic content is non-exempt and will certainly evaporate under Method 24 oven conditions, may be tested using the adaptation of EPA Method 415.1 as proposed by Sorrell, et. al. of EPA's Emission Measurement Center, Office of Air Quality Planning & Standards (OAQPS): "Total Organic Carbon for Offset Lithographic Solutions."

e. The VOC content of materials believed to have between 5 and 10% solids shall be determined by either EPA Method 24 or by Bay Area Method 31.

f. Total absolute vapor-pressure of solvents containing VOC shall be determined in accordance with ASTM Test Method D 2879-83, "Vapor Pressure-Temperature Relationship and Initial Decomposition Temperature of Liquids by Isoteniscope," 1983 edition.

g. Temperature measurements shall be done with an instrument having an accuracy and precision of no less than ± one (1) degree Celsius.

h. The U.S. Government Printing Office "Standard Industrial Classification Manual, 1987" (and no future editions) is incorporated by reference and is on file at the Maricopa County Air Quality Department, 1001 N. Central Ave., Phoenix, Arizona 85004.

502.2 Test Methods Adopted by Reference: The test methods for those subparts of 40 CFR Part 60, Appendix A, adopted as of July 1, 1998, as listed below, are adopted by reference. The other test methods listed in subsection 502.2 are referred to by their specific dates of adoption and are also adopted by reference. These adoptions by reference include no future editions or amendments. Copies of test methods referenced in this section are available at the Maricopa County Air Quality Department, 1001 N. Central Ave., Phoenix, Arizona 85004.

a. EPA Method 18 ("Measurement of Gaseous Organic Compound Emissions by Gas Chromatography") and its submethods (40 CFR 60, Appendix A).

b. EPA Test Method 24 ("Determination of Volatile Matter Content, Water Content, Density, Volume Solids, and Weight Solids of Surface Coatings") and its submethods (40 CFR 60, Appendix A).

c. EPA Method 25 ("Determination of Total Gaseous Nonmethane Organic Emissions as Carbon") and its submethods (40 CFR 60, Appendix A).

d. California's Bay Area Air Quality Management District (BAAQMD) Method 31 (April 15, 1992), "Determination of Volatile Organic Compounds in Paint Strippers, Solvent Cleaners, and Low Solids Coatings".

e. EPA Method 415.1 as proposed by Sorrell, et. al. of EPA's Emission Measurement Center, Office of Air Quality Planning & Standards (OAQPS): "Total Organic Carbon for Offset Lithographic Solutions," 1992.

f. ASTM Test Method D 2879-83, "Vapor Pressure-Temperature Relationship and Initial Decomposition Temperature of Liquids by Isoteniscope," 1983 edition.

503 CONDENSER TEMPERATURE: In cases where the condenser outlet gas temperature is not readily measurable due to negligible gas flow rate, the temperature of the condenser coolant may be used in lieu of condenser outlet gas temperature. In such cases, an exceedance of coolant temperature is an exceedance of the outlet gas temperature limits in Table 1, subsection 301.1 of this rule.

504 FORMULA FOR TOTAL VOC VAPOR PRESSURE: The sum of the partial pressures of the compounds defined as VOCs may be calculated by using the following formula:

$$Pp_c = \frac{\sum_{i=1}^{n} \left(W_j\right)(VP) \Big/ MW_i}{\frac{W_w}{18} + \sum_{j=1}^{m} \frac{W_{ej}}{MW_{ej}} + \sum_{i=1}^{n} \frac{W_i}{MW_i}}$$

Where:

W_i	=	Weight of the "i"th VOC compound in grams
W_w	=	Weight of water in grams
W_{ej}	=	Weight of the "j"th non-precursor compound in grams
MW_j	=	Molecular weight of the "i"th VOC compound in grams per gram mole, e.g., one gram-mole of isopropyl alcohol weighs 60 grams
MW_{ej}	=	Molecular weight of the "j"th non-precursor compound, e.g., 1 gram-mole of acetone weighs 58 grams
Pp_c	=	VOC composite partial pressure at 20°C in mm mercury (Hg)
VP	=	Vapor pressure of the "i"th VOC compound at 20°C in mm Hg
18	=	Weight of one gram-mole of water

REGULATION III - CONTROL OF AIR CONTAMINANTS

RULE 350
STORAGE OF ORGANIC LIQUIDS AT BULK PLANTS AND TERMINALS

INDEX

SECTION 100 - GENERAL

101 PURPOSE

102 APPLICABILITY

SECTION 200 - DEFINITIONS

201 BULK PLANT

202 BULK TERMINAL

203 DELIVERY VESSEL

204 GAS TIGHT

205 GASOLINE

206 LOADING FACILITY

207 ORGANIC LIQUID

208 STATIONARY STORAGE TANK

209 SUBMERGED FILL PIPE

210 TRUE VAPOR PRESSURE (TVP)

211 VAPOR LOSS CONTROL DEVICE

212 VAPOR TIGHT

SECTION 300 - STANDARDS

301 ALL STORAGE TANKS GREATER THAN 250 GALLONS (946 L)

302 GASOLINE STORAGE TANKS BETWEEN 250 AND 40,000 GALLONS (946 - 151,400 L)

303 ORGANIC LIQUID STORAGE TANKS OF 20,000 THROUGH 39,999 GALLONS CAPACITY (75,700 - 151,396 L)

304 STORAGE TANKS OF 40,000 GALLONS (151,400 L) OR MORE

305 TANKS STORING LIQUIDS HAVING VAPOR PRESSURES EXCEEDING 11 PSIA

306 EXTERNAL FLOATING ROOF STORAGE TANKS

307 INTERNAL FLOATING ROOF TANKS WITH FIXED COVERING

308 VAPOR COLLECTION/PROCESSING SYSTEM

309 ADDITIONAL REQUIREMENTS

310 EXEMPTIONS

SECTION 400 - ADMINISTRATIVE REQUIREMENTS

401 ANNUAL INSPECTIONS OF EXTERNAL FLOATING ROOF TANKS

402 ANNUAL INSPECTIONS OF INTERNAL FLOATING ROOF TANKS

403 FIVE-YEAR, FULL CIRCUMFERENCE INSPECTIONS

404 SEMI-ANNUAL INSPECTIONS BY OWNER OR OPERATOR

405 COMPLIANCE SCHEDULE

SECTION 500 - MONITORING AND RECORDS

501 VAPOR PRESSURE RECORDS

502 COMPLIANCE DETERMINATION - TEST METHODS

Revised 07/13/88
Revised 04/06/92

MARICOPA COUNTY
AIR POLLUTION CONTROL REGULATIONS

REGULATION III - CONTROL OF AIR CONTAMINANTS

RULE 350
STORAGE OF ORGANIC LIQUIDS AT BULK PLANTS AND TERMINALS

SECTION 100 - GENERAL

101 PURPOSE: To limit emissions of volatile organic compounds from organic liquids under actual storage conditions.

102 APPLICABILITY: This rule is applicable to the transfer and storage of any organic liquid in a bulk plant or bulk terminal stationary storage tank which is used primarily to fill delivery vessels.

SECTION 200 - DEFINITIONS: For the purpose of this rule, the following definitions shall apply:

201 BULK PLANT - Any loading facility at which gasoline and/or other organic liquids with a true vapor pressure of 1.5 psia (77.5 mm Hg) or greater under any actual storage conditions are received from delivery vessels for storage in on-site stationary tanks, and from which such liquids also are transferred to delivery vessels.

202 BULK TERMINAL - Any primary distributing loading facility which has ever received in any consecutive 30-day period over 600,000 gallons (2,271,180 l) of gasoline and/or other organic liquids with a true vapor pressure of 1.5 psia (77.5 mm Hg) or greater under actual storage conditions; or any loading facility where delivery of such liquids to the facility is primarily by pipeline.

203 DELIVERY VESSEL - Any vehicular-mounted container such as a railroad tank car, tanker truck, tank trailer or any other mobile container used to transport organic liquids.

204 GAS TIGHT - Having no leak of gaseous organic compound(s) exceeding 10,000 ppm above background when measurements are made using EPA Method 21 with a methane calibration standard.

205 GASOLINE - Any petroleum distillate, petroleum distillate/alcohol blend, petroleum distillate/organic compound blend, or alcohol having a true vapor pressure of 1.5 psia (77.5 mm Hg) or greater under any actual conditions of storage and handling, and which is used as a fuel for internal combustion engines.

206 LOADING FACILITY - Any operation or facility such as a gasoline storage tank farm, pipeline terminal, bulk plant, loading dock or combination thereof, where organic liquids are transferred or loaded into or out of delivery vessels for future distrbution. Included are all related pollutant-emitting activities which are located on one or more contiguous or adjacent properties, and are under the control of the same person or persons under common control.

207 ORGANIC LIQUID - Any organic compound which exists as a liquid under any actual conditions of use, transport or storage.

208 STATIONARY STORAGE TANK - Any tank, reservoir or other container used to store, but not transport, organic liquids.

209 SUBMERGED FILL PIPE - Any discharge pipe or nozzle which meets the applicable specification as follows:

209.1 Top-Filled Or Bottom-Filled Tanks: The end of the discharge pipe or nozzle is totally submerged when the liquid level is six inches (15 cm) from the bottom of the tank.

209.2 Side-Filled: The end of the discharge pipe or nozzle is totally submerged when the liquid level is 18 inches (46 cm) from the bottom of the tank.

210 TRUE VAPOR PRESSURE (TVP) - Absolute vapor pressure of a liquid at its existing temperature of storage and handling.

211 VAPOR LOSS CONTROL DEVICE - Any piping, hoses, equipment, and devices which are used to collect, store and/or process organic vapors at a bulk terminal, bulk plant, service station or other operation handling gasoline and/or other organic liquids.

212 VAPOR TIGHT - A condition where no organic vapor leak reaches or exceeds 100 percent of the lower explosive limit at a distance of one inch (2.5 cm) from a leak when measured with a combustible gas detector or an organic vapor analyzer, both calibrated with propane.

SECTION 300 - STANDARDS

301 ALL STORAGE TANKS GREATER THAN 250 GALLONS (946 L): No person shall install or use a stationary storage tank with a capacity greater than 250 gallons (946 l) for storing organic liquids with a true vapor pressure of 1.5 psia (77.5 mm Hg) or more unless such a tank meets the following requirements:

301.1 The tank has a submerged fill pipe; and

Note[1]

301.2 The tank has a pressure/vacuum valve which is set within ten percent of the tank's maximum, safe working-pressure.

302 GASOLINE STORAGE TANKS BETWEEN 250 AND 40,000 GALLONS (946 -151,400 L): No person shall store gasoline in a stationary storage tank with a capacity less than 40,000 gallons (151,400 l) but greater than 250 gallons (946 l) unless the tank is equipped with a vapor recovery system which collects and returns displaced vapors to the delivery vessel using vapor-tight fittings and lines; or such tank uses at least one of the vapor loss control methods in Sections 306, 307, or 308 of this rule.

303 ORGANIC LIQUID STORAGE TANKS OF 20,000 THROUGH 39,999 GALLONS CAPACITY (75,700 - 151,396 L): No person shall store organic liquids with a true vapor pressure (TVP) of 1.5 through 11.0 psia (77.5 - 569 mm Hg) in a stationary tank with a capacity from 20,000 through 39,999 gallons (75,700 - 151,396 l) unless the tank is equipped with a vapor recovery system which collects and returns displaced vapors to the delivery vessel using vapor-tight fittings and lines; or such tank uses at least one of the vapor loss control methods specified in Sections 306, 307, or 308 of this rule.

304 STORAGE TANKS OF 40,000 GALLONS (151,400 L) OR MORE: No person shall place, store or hold in any stationary storage tank having a capacity of 40,000 gallons (151,400 L) or more, any gasoline or organic liquid having a true vapor pressure of 1.5 psia (77.5 mm Hg) or greater under actual storage conditions, unless such storage tank is equipped with at least one of the vapor loss control devices specified in Sections 306, 307, or 308 of this rule.

305 TANKS STORING LIQUIDS HAVING VAPOR PRESSURES EXCEEDING 11 PSIA: No person shall place, store, or hold in a stationary tank having a capacity over 250 gallons (946 l) organic liquid(s) with a true vapor pressure above 11.0 psia (569 mm Hg) unless such a tank is either a pressure tank maintaining working pressure sufficient at all times to prevent organic vapor/gas loss to the atmosphere or is equipped with a vapor collection/processing system specified in Section 308 of this rule.

306 EXTERNAL FLOATING ROOF STORAGE TANKS: This vapor loss control device is an uncovered floating roof consisting of either a pontoon type or a double-

[1] This note is not part of Rule 350, but is provided for the reader's convenience. The requirement of subsection 301.2 for a pressure/vacuum valve is not applicable to floating roof tanks.

deck type roof. It must rest on and be supported by the surface of the liquid contents, be equipped with a continuous primary seal to close the space between the roof eave and tank wall, except as provided in subsection 309.1 and have a continuous secondary seal which is of a design that is in accordance with accepted standards of the petroleum industry. The secondary seal shall meet the following requirements:

306.1 The secondary seal is to be installed above the primary seal so that it completely covers the space between the roof edge or primary seal and the tank wall, except as provided in subsection 306.2 of this rule. Storage tanks constructed after July 13, 1988, shall have a secondary seal that is rim-mounted. Except for tanks having metallic shoe primary seals onto which secondary seals were installed prior to July 13, 1988, by October 6, 1993 no person shall operate an external floating roof tank subject to the provisions of this rule unless a secondary seal extends from the roof to the tank shell (a rim-mounted seal) and is not attached to the primary seal.

306.2 The accumulated area of gaps between the tank wall and the secondary seal shall not exceed 1.0 square inch per foot (21.2 cm^2 per meter) of tank diameter. Determinations of gap area shall only be made at the point(s) where the gaps exceed 1/8 inch (3 mm). The width of any portion of any gap shall not exceed 1/2 inch (1.27 cm).

306.3 The owner or operator is exempted from the requirements for secondary seals and the secondary seal gap criteria when performing gap measurements or inspections of the primary seal.

307 INTERNAL FLOATING ROOF TANKS WITH FIXED COVERING: This vapor loss control device is a covered tank with an internal floating roof resting on the contained liquid. This tank and its appurtenances shall meet the applicable requirements as follows:

307.1 Bulk terminal tanks for which construction, reconstruction or modification commenced after July 23, 1984, must comply with all applicable requirements of the EPA New Source Performance Standard (NSPS), 40 CFR Part 60, Subpart Kb.

307.2 All tanks not subject to subsection 307.1 must comply with one of the following:

a. Comply with 40 CFR Part 60, Subpart Kb, notwithstanding the type of facility and the date of tank construction, reconstruction or modification; or

b. Have at least one continuous seal which completely covers the space between the roof edge and tank wall, except as provided in subsection 309.1, and meet at least one of the following requirements:

(1) Have a contact-type roof resting completely on the liquid surface.

(2) Have a liquid mounted seal.

(3) Have two seals, a primary and a secondary.

308 VAPOR COLLECTION/PROCESSING SYSTEM: This vapor loss control device consists of a vapor gathering subsystem capable of collecting the organic vapors and organic gases plus a second subsystem capable of processing such vapors and gases, preventing at least 95 percent by weight of the volatile organic compounds entering it from escaping to the atmosphere.

308.1 The vapor processing subsystem shall be gas-tight except for the designated exhaust.

308.2 Any tank gauging or sampling device on a tank, vented to such a vapor collection/processing system, shall be equipped with a gas-tight cover which shall be closed at all times except during gauging or sampling procedures.

308.3 All pressure-vacuum valves shall be constructed and maintained in a gas tight condition except when the operating pressure exceeds the valve release setting.

309 ADDITIONAL REQUIREMENTS:

309.1 Prohibition - Floating Roof Openings: Floating roof tanks subject to the provisions of Section 306 or 307 of this rule shall have no visible holes, tears or other openings in the seal or in any seal fabric. The accumulated area of gaps between a tank's wall and primary seal shall not exceed 10 square inches per foot of tank diameter (212 cm^2 per meter) and the width of any portion of any gap shall not exceed 1½ inches (3.8 cm). Where applicable, all openings except drains shall be equipped with a cover seal or lid. The cover seal or lid shall be in a closed position at all times, except when the device is in actual use. Automatic bleeder vents shall be closed at all times, except when the roof is floated off or landed on the roof leg supports. Rim vents, if provided, shall be set to open only when the roof is being floated off the roof leg supports or at the manufacturer's recommended setting.

309.2 Tanks and all required emission control equipment shall be properly installed, properly maintained and be properly operating.

310 EXEMPTIONS:

310.1 A pressure tank maintaining working pressure sufficient at all times to prevent organic vapor or gas loss to the atmosphere is exempt from Sections 301, 302, 303, and 304 of this rule.

310.2 During the following periods a floating roof is exempt from the requirement that its roof be floating: when the tank is being drained completely and when it is being filled, as long as both processes are accomplished continuously and as rapidly as practicable.

310.3 A horizontal filling nozzle at its highest point within a floating roof tank exceeding 2,000,000 gallons (7,580,000 l) capacity may be up to 39.4 inches (1 meter) above the tank bottom if: except when the tank is emptied completely, the nozzle is kept completely submerged, including when the roof rests on its legs.

SECTION 400 - ADMINISTRATIVE REQUIREMENTS

401 ANNUAL INSPECTIONS OF EXTERNAL FLOATING ROOF TANKS: The owner or operator of any tank which uses an external floating roof to meet the vapor loss control requirements of this rule shall make the primary seal envelope and the secondary seal available for unobstructed inspection by the Control Officer on an annual basis. The primary seal envelope shall be made available for inspection at a minimum of four locations selected along its circumference at random by the Control Officer. If the Control Officer detects a violation as a result of any such inspection, the Control Officer may require such further unobstructed inspection of the seals as may be necessary to determine the seal condition for its entire circumference.

402 ANNUAL INSPECTIONS OF INTERNAL FLOATING ROOF TANKS: The owner or operator of any tank which uses an internal floating roof to meet the vapor loss control requirements of this rule shall make the entire tank including the internal floating roof available for inspection prior to filling. It shall be made available for visual inspection through the manholes or roof hatches on the fixed covering on an annual basis. Roofs which practicably can be walked on shall annually be made available for hands-on inspection.

403 FIVE-YEAR, FULL CIRCUMFERENCE INSPECTIONS: As of July 13, 1988, the owner or operator of a floating roof tank of 20,000 gallons (75,700 l) or more storing an organic liquid with a TVP of 1.5 psia (77.5 mm Hg) or greater shall make

the primary seal envelope available for inspection by the Control Officer for its full length every five years. However, if prior thereto the secondary seal is removed or if the tank is drained and cleaned by the owner or operator for any reason, it shall be made available for such inspection at that time. The owner or operator shall provide notification to the Control Officer no less than seven working days prior to removal of the secondary seal. The owner or operator shall perform a complete inspection of the primary seal and floating roof, including measurement of gap area and maximum gap, whenever the tank is emptied for non-operational reasons or at least every five years, whichever is more frequent.

404 SEMI-ANNUAL INSPECTIONS BY OWNER OR OPERATOR: The owner or operator of any floating roof tank subject to this rule shall inspect the tank and seals at least once every six months to determine ongoing compliance with both the applicable standards of this rule and any permit conditions pertaining to the tank. Determinations of secondary seal gap area on external floating roofs need be made only once per year. Records of these inspections shall be maintained and shall be made available to the Control Officer upon request.

405 COMPLIANCE SCHEDULE: By October 6, 1992, any person subject to Section 300 who does not comply with all its provisions shall submit to the Control Officer for approval an emission control plan describing the method(s) to be used to achieve full compliance by October 6, 1993. This plan shall specify dates for completing increments of progress, such as the contractual arrival date of new control equipment. The Control Officer may require a person submitting such an emission control plan to submit subsequent reports on progress in achieving compliance.

SECTION 500 - MONITORING AND RECORDS

501 VAPOR PRESSURE RECORDS: A person whose tanks are subject to the provisions of this rule shall keep accurate records of liquids stored in such tanks including either the true or the Reid vapor pressure ranges of each such liquid. The temperature of the contents of each affected tank located at bulk terminals shall be recorded at least weekly and the true vapor pressure of each shall be recorded at least once each month. These records shall be kept a minimum of three years.

502 COMPLIANCE DETERMINATION - TEST METHODS: When more than one test method is permitted for a determination, an exceedance of the limits established in this rule determined by any of the applicable test methods constitutes a violation of this rule.

502.1 Determination Of Vapor-Tight Condition: Applicable procedures of Rule 351, Section 501.

502.2 Emission Rates And Control Device Efficiency: EPA Reference Methods 2A, 2B, 18 and 25A.

502.3 Gaseous Leak Detection And Determination Of Gas-Tight Condition: EPA Method 21.

502.4 Reid Vapor Pressure: Reid vapor pressure shall be determined by ASTM Method D323-82 or by ASTM Method D-5191.

502.5 True Vapor Pressure: True vapor pressure shall be determined by ASTM Method 2879-83 and by temperature measurement under actual conditions using an instrument accurate to within ± 1 degree Fahrenheit or ± 0.5 degree Celsius. For purposes of recording and reporting, the Reid vapor pressure and the foregoing temperature determination may be used in conjunction with the method of American Petroleum Institute Bulletin 2517, February, 1980, to determine true vapor pressure, unless the Control Officer specifies ASTM Method 2879-83.

Last Formatted - Fall 1997

REGULATION III - CONTROL OF AIR CONTAMINANTS

RULE 351
LOADING OF ORGANIC LIQUIDS

INDEX

SECTION 100 - GENERAL

101 PURPOSE

102 APPLICABILITY

SECTION 200 - DEFINITIONS

201 BULK PLANT

202 BULK TANK

203 BULK TERMINAL

204 DELIVERY VESSEL

205 DISPENSING TANK

206 EXCESS ORGANIC LIQUID DRAINAGE

207 FUGITIVE LIQUID LEAK

208 GAS TIGHT

209 GASOLINE

210 GASOLINE DISPENSING OPERATION

211 LOADING FACILITY

212 OFFSET FILL LINE

213 ORGANIC LIQUID

214 STATIONARY STORAGE TANK

215 SUBMERGED FILL PIPE

216 SWITCH LOADING

217 TRUE VAPOR PRESSURE (TVP)

218 VAPOR COLLECTION/PROCESSING SYSTEM

219 VAPOR LOSS CONTROL DEVICE

220 VAPOR TIGHT

SECTION 300 - STANDARDS

301 GENERAL REQUIREMENTS FOR LOADING FACILITIES

302 OPERATING REQUIREMENTS FOR VAPOR LOSS CONTROL DEVICES

303 REPAIR AND RETESTING REQUIREMENT

304 EQUIPMENT MAINTENANCE AND OPERATING PRACTICES

305 EXEMPTIONS

SECTION 400 - ADMINISTRATIVE REQUIREMENTS

401 EQUIPMENT LEAKS

402 COMPLIANCE SCHEDULE

SECTION 500 - MONITORING AND RECORDS

501 LEAK DETECTION - TEST PROCEDURE

502 COMPLIANCE INSPECTIONS

503 RECORDS RETENTION

504 COMPLIANCE DETERMINATION - TEST METHODS

Revised 07/13/88
Revised 04/06/92
Revised 02/15/95

MARICOPA COUNTY
AIR POLLUTION CONTROL REGULATIONS

REGULATION III - CONTROL OF AIR CONTAMINANTS

RULE 351
LOADING OF ORGANIC LIQUIDS

SECTION 100 - GENERAL

101 PURPOSE: To limit emissions of volatile organic compounds from the loading of organic liquids.

102 APPLICABILITY: This rule is applicable to the transfer of organic liquids having a true vapor pressure of 1.5 psia (77.5 mm Hg) or greater under actual loading conditions. It regulates transfers at bulk terminals and bulk plants from stationary storage tanks to delivery vessels and from delivery vessels to stationary storage tanks.

SECTION 200 - DEFINITIONS:

For the purpose of this rule, the following definitions shall apply:

201 BULK PLANT - Any loading facility at which gasoline and/or other organic liquids with a true vapor pressure of 1.5 psia (77.5 mm Hg) or greater under any actual storage conditions are received from delivery vessels for storage in on-site stationary tanks, and from which such liquids also are transferred to delivery vessels.

202 BULK TANK - Any stationary storage tank serving a loading rack which loads delivery vessels with organic liquids.

203 BULK TERMINAL - Any primary distributing loading facility which has ever received in any consecutive 30-day period over 600,000 gallons (2,271,180 l) of gasoline and/or other organic liquids with a true vapor pressure of 1.5 psia (77.5 mm Hg) or greater under actual storage conditions; or any loading facility where delivery of such liquids to the facility is primarily by pipeline.

204 DELIVERY VESSEL - Any vehicular-mounted container such as a railroad tank car, tanker truck, tank trailer or any other mobile container used to transport organic liquids.

205 DISPENSING TANK - Any stationary tank which dispenses organic liquid fuel directly into the fuel tanks of motor vehicles including aircraft.

206 EXCESS ORGANIC LIQUID DRAINAGE - More than 10 milliliters (0.34 fluid ounces) per disconnect.

207 FUGITIVE LIQUID LEAK - An organic liquid leak of more than three drops per minute from any single leak source other than the disconnect operation of liquid fill line and vapor line.

208 GAS TIGHT - Having no leak of gaseous organic compound(s) exceeding 10,000 ppm above background when measurements are made using EPA Method 21 with a methane calibration standard.

209 GASOLINE - Any petroleum distillate, petroleum distillate/alcohol blend, petroleum distillate/organic compound blend, or alcohol having a true vapor pressure of 1.5 psia (77.5 mm Hg) or greater under any actual conditions of storage and handling, and which is used as a fuel for internal combustion engines.

210 GASOLINE DISPENSING OPERATION - All gasoline dispensing tanks and associated equipment located on one or more contiguous or adjacent properties under the control of the same person or persons under common control.

211 LOADING FACILITY - Any operation or facility such as a gasoline storage tank farm, pipeline terminal, bulk plant, or loading dock or combination thereof, where organic liquids are transferred or loaded into or out of delivery vessels for future distribution. Included are all related pollutant-emitting activities which are located on one or more contiguous or adjacent properties, and are under the control of the same person or persons under common control.

212 OFFSET FILL LINE - Any organic-liquid fill line (piping and fittings) which contains one or more bends.

213 ORGANIC LIQUID - Any organic compound which exists as a liquid under any actual conditions of use, transport or storage.

214 STATIONARY STORAGE TANK - Any tank, reservoir or other container used to store, but not transport, organic liquids.

215 SUBMERGED FILL PIPE - Any discharge pipe or nozzle which meets the applicable specification as follows:

215.1 Top-Filled Or Bottom-Filled Tanks: The end of the discharge pipe or

nozzle is totally submerged when the liquid level is six inches (15 cm) from the bottom of the tank.

215.2 **Side-Filled:** The end of the discharge pipe or nozzle is totally submerged when the liquid level is 18 inches (46 cm) from the bottom of the tank.

216 **SWITCH LOADING -** Loading diesel fuel into a delivery vessel whose previous load was gasoline; or loading any organic liquid not subject to this rule into a delivery vessel whose previous load was an organic liquid subject to this rule.

217 **TRUE VAPOR PRESSURE (TVP) -** Absolute vapor pressure of a liquid at its existing temperature of storage and/or handling.

218 **VAPOR COLLECTION/PROCESSING SYSTEM -** A vapor loss control device consisting of a vapor gathering subsystem capable of collecting the organic vapors and organic gases plus a second subsystem capable of processing such vapors and gases, preventing at least 95 percent of the volatile organic compounds entering it from entering the atmosphere.

219 **VAPOR LOSS CONTROL DEVICE -** Any piping, hoses, equipment, and devices which are used to collect, store and/or process organic vapors at a bulk terminal, bulk plant, service station or other operation handling gasoline and/or other organic liquids.

220 **VAPOR TIGHT -** A condition where no organic vapor leak reaches or exceeds 100 percent of the lower explosive limit at a distance of one inch (2.5 cm) from a leak when measured with a combustible gas detector or an organic vapor analyzer, both calibrated with propane.

SECTION 300 - STANDARDS

301 **GENERAL REQUIREMENTS FOR LOADING FACILITIES:** All bulk terminals and plants must have submerged fill pipes in all tanks over 250 gallons (946 l) storing organic liquids, observe designated procedures and be equipped with applicable equipment as follows:

301.1 **Bulk Terminals:** No person shall load organic liquids having a TVP of 1.5 psia (77.5 mm Hg) or greater into any delivery vessel from a stationary storage tank at a bulk terminal unless the vessel bears a current pressure-test decal issued by the Control Officer and the terminal uses a vapor collection/-processing system which reduces the emissions of volatile organic compounds to not more than .08 pounds per 1000 gallons of such liquids transferred (10 grams per 1000 liters). Switch loading shall be subject to this standard. The terminal owner or operator and the operator of the receiving vessel shall act to ensure that the vapor line is connected before such liquids

are transferred.

301.2 Bulk Plant Tanks Over 250 Gallons (>946 L):

a. Transfer To Bulk Plant Tanks: No person shall transfer gasoline from a delivery vessel into a bulk plant tank exceeding 250 gallons (946 l) capacity unless the delivery vessel bears a current county pressure-test decal and uses a vapor balance system equipped with fittings which are vapor tight; or, alternatively, a vapor loss control system is used which emits to atmosphere less than 0.6 pound of volatile organic compounds per 1000 gallons transferred (72 grams per 1000 liters).

b. Loading From Bulk Plant Tanks: No person shall transfer gasoline from a bulk plant tank exceeding 250 gallons (946 l) into a delivery vessel unless both the loading rack and delivery vessel use a vapor balance system equipped with fittings which are vapor tight; or, alternatively, a vapor loss control system is used which emits to atmosphere less than 0.6 pounds of volatile organic compounds per 1000 gallons loaded (72 grams per 1000 liters).

302 OPERATING REQUIREMENTS FOR VAPOR LOSS CONTROL DEVICES: The owner or operator of a vapor loss control device subject to this rule shall operate the device and organic liquid transfer equipment as follows:

302.1 Loading shall be accomplished in a manner that prevents gauge pressure from exceeding 18 inches of water (33.6 mm Hg) and vacuum from exceeding six inches of water (11.2 mm Hg) in the tank truck. Each owner or operator of a facility shall act to ensure that any vapor recovery system required by this Rule 351 is connected between the delivery vessel and the storage tank during all organic liquid transfers.

302.2 Loading shall be accomplished in a manner that prevents overfills, fugitive liquid leaks or excess organic liquid drainage. Owners or operators of bulk plants or operators of delivery vessels shall observe all parts of the transfer and shall discontinue transfer if any leaks are observed. Measures shall be taken to prevent liquid leaks from the loading device when it is not in use, and to complete drainage before the loading device is disconnected. During loading or unloading operations, potential leak sources shall be vapor tight as demonstrated by the test procedure described in Section 501 of this rule.

302.3 Loading operations which use vapor collection/processing equipment shall be accomplished in such a manner that the displaced vapor and air will be vented only to the vapor collection/processing system, which shall be operated gas-tight and in a manner such that the vapor processing capacity is not exceeded.

Diaphragms used in vapor storage tanks shall be maintained gas-tight.

302.4 Vapor transfer lines shall be equipped with fittings that are vapor tight and that automatically and immediately close upon disconnection. Vapor balance systems shall be designed to prevent any vapors collected at one loading rack from passing to another loading rack.

303 REPAIR AND RETESTING REQUIREMENT: Except as superseded by Division actions pursuant to the procedures of Rule 100, Section 501 ("Malfunctions"), the owner/operator of a vapor loss control device that exceeds the standards of this rule shall notify the Control Officer and observe the following time schedule in ending such exceedances:

303.1 Concentrations at or above the lower explosive limit must be brought into compliance within 24 hours of detection.

303.2 Leak concentrations exceeding 10,000 ppm but less than 50,000 ppm as methane for vapor collection/processing equipment subject to gas-tight standard shall be brought into compliance within 5 days of detection.

303.3 Except as the Control Officer otherwise specifies, a leak source subject to Sections 303.1 or 303.2 must be tested after presumed leak-correction within 15 minutes of recommencing use; if leak standards are exceeded in this test, the use of the faulty equipment shall be discontinued within 15 minutes until correction is verified by retesting.

304 EQUIPMENT MAINTENANCE AND OPERATING PRACTICES: All equipment associated with delivery and loading operations shall be maintained to be leak free, vapor tight and in good working order. Gasoline shall not be spilled, discarded in sewers, stored in open containers, or handled in any other manner that would result in evaporation to the atmosphere. Purging of gasoline vapors and of JP-4 (jet petrol) vapors is prohibited.

305 EXEMPTIONS:

305.1 Less Than 120,000 Gallons Per 30-Day Period: At bulk plants built before October 2, 1978, vapor loss control specified in Section 301.2b is not required at the outloading rack when all of the following are complied with:

a. After April 6, 1992, the bulk plant loads less than 120,000 gallons (454,800 l) of gasoline into delivery vessels in any consecutive 30-day period. Any plant that becomes subject to all of the provisions of Section 301.2b by exceeding this threshold will remain subject to these provisions even if its output later falls below the threshold.

b. Keep current records of amount of gasoline loaded and keep them readily accessible to the Division upon request for at least three (3) years.

c. Load outgoing gasoline using submerged fill only.

d. The owners or operators of the bulk plant or the owners or operators of the delivery vessel shall observe all parts of the transfer and shall discontinue the transfer if any leaks are observed.

305.2 **Opening Hatches:** When VOC vapors from organic liquids are present within a non-exempt delivery vessel, authorized government agents as well as owners/operators and their contractors may open vapor containment equipment while performing operations required by Division rules or by other statutory entities, but shall be restricted as follows unless approved in advance by the Control Officer:

a. Wait at least 3 minutes after onloading is complete or delivery vessel has stopped before opening hatch or other vapor seal.

b. Reclose hatch or other sealing device within 3 minutes of opening.

c. Limit windspeed at opened hatch or other opened sealing device to not more than 3 mph (1.34 m/sec).

SECTION 400 - ADMINISTRATIVE REQUIREMENTS

401 EQUIPMENT LEAKS:

401.1 The owner or operator shall also perform monthly inspections, while vapor is being transferred, for liquid and vapor leaks and for faulty equipment. In these monthly inspections detection methods incorporating sight, sound, smell and/or touch may be used.

401.2 A log book shall be used and shall be signed by the owner or operator at the completion of each monthly inspection for equipment leaks. A section of the log shall contain a list, summary description, or diagram(s) showing the location of all equipment in gasoline service at the facility.

401.3 Leak detection tests shall be conducted annually by the owner of each bulk loading facility or by a consultant, at the expense of the owner. Testing shall be done according to procedures in Section 501, except that EPA Method 21 shall be used to test for leaks from a vapor collection/ processing unit and its associated piping outside the loading area. Equipment shall conform to the

specifications of those test methods cited in Section 504.2. Prior to testing, the owner shall notify the Control Officer of the date, time and location of the testing. The Control Officer or his representatives shall at their discretion observe the tests.

402 COMPLIANCE SCHEDULE: By September 30, 1995, the owner or operator of any loading facility which requires modification subject to a requirement of Section 300 of this rule shall submit to the Control Officer for approval an emission control plan and a schedule for achieving compliance with all requirements by April 30, 1996. The plan shall specify the date of completion of each major step leading to compliance.

SECTION 500 - MONITORING AND RECORDS

501 LEAK DETECTION - TEST PROCEDURE: During loading into or unloading out of delivery vessels, the peripheries of all potential sources of leakage at the loading facility are checked with a combustible gas detector or organic vapor analyzer (OVA) as follows:

501.1 Pressure: A pressure tap shall be placed in the loading facility's vapor control system, as close as possible to the delivery vessel's tank. The pressure shall be recorded periodically during testing, at least once every minute. Instantaneous maximum pressure shall be recorded either automatically or by visual observation. A pressure measurement device capable of measuring 20 inches (50.8 cm) of water pressure with a precision of 0.1 (2.5 mm) inch of water shall be calibrated. This device shall fit the tap and shall either be permanently installed or shall be kept available at all times at the facility.

501.2 Calibration: Within 4 hours prior to monitoring the combustible gas detector or OVA shall be calibrated with 10,600 ppm propane by volume in air for a 50 percent lower explosive limit (LEL) response.

501.3 Probe Distance: The probe inlet shall be one inch (2.5 cm) or less from the potential leak source when searching for leaks. The probe inlet shall be one inch (2.5 cm) from the leak source when the highest detector reading is being determined for a discovered leak. When the probe is obstructed from moving within one inch (2.5 cm) of an actual or potential leak source, the closest practicable probe distance shall be used.

501.4 Probe Movement: The probe shall be moved slowly, not faster than 1.6 inches per second (4 centimeters per second). If there is any meter deflection at a potential or actual leak source, the probe shall be positioned to locate the point of highest meter response.

501.5 Probe Position: The probe inlet shall be positioned in the path of the vapor

flow from a leak such that the central axis of the probe-tube inlet shall be positioned coaxial with the path of the most concentrated vapors.

501.6 **Wind:** Wind shall be blocked as much as possible from the space being monitored. The annual leak detection test required by Section 401 shall be valid only when wind speed in the space being monitored is 5 mph or less.

501.7 **Data Recording:** The highest detector reading and location for each incidence of leakage shall be recorded along with the date and time.

502 **COMPLIANCE INSPECTIONS:** The Control Officer, at any time, may monitor a delivery vessel vapor collection system, a loading rack's vapor loss control devices, a loading facility or a vapor collection/processing system for vapor leaks by the methods described in Section 501 of this rule or by applicable EPA Reference Methods specified in Section 504.

503 **RECORDS RETENTION:** Records and information required by this rule shall be retained for at least three years.

504 **COMPLIANCE DETERMINATION - TEST METHODS:** When more than one test method is permitted for a determination, an exceedance of the limits established in this rule determined by any of the applicable test methods constitutes a violation of this rule.

504.1 **Vapor Collection/Processing System:** Control efficiency of a vapor collection/processing system shall be determined according to EPA Reference Method 25A or Method 25B subsequent to the Control Officer's approval of the test protocol. Leak tests to verify a gas-tight state of the equipment associated with the vapor collection/processing device, including the piping outside of the loading area, shall be conducted according to EPA Reference Method 21. Gas volume flow rates shall be determined by Method 2B for a thermal oxidizer; otherwise, by Method 2A.

504.2 **Vapor Balance And Loading Systems:** Vapor tightness shall be determined using the method described in Section 501 of this rule.

504.3 True Vapor Pressure shall be determined by ASTM Method 2879-83 and by temperature measurement under actual conditions using an instrument accurate to within ±1 degree Fahrenheit or ±0.5 degree Celsius. For purposes of recording and reporting, the Reid vapor pressure and the foregoing temperature determination may be used in conjunction with the method of American Petroleum Institute Bulletin 2517, February, 1980, to determine true vapor pressure, unless the Control Officer specifies ASTM Method 2879-83.

504.4 Reid Vapor Pressure shall be determined by ASTM Method D 323-82 or by ASTM Method D 5191.

REGULATION III – CONTROL OF AIR CONTAMINANTS

RULE 352
GASOLINE DELIVERY VESSEL TESTING AND USE

INDEX

SECTION 100 – GENERAL

101 PURPOSE
102 APPLICABILITY

SECTION 200 – DEFINITIONS

201 2-POINT SYSTEM
202 EXCESS GASOLINE DRAINAGE
203 GASOLINE
204 GASOLINE DELIVERY VESSEL
205 GASOLINE VAPORS
206 LEAK FREE
207 MARICOPA COUNTY (MC) PRESSURE TEST
208 PURGING
209 STAGE 1 VAPOR RECOVERY SYSTEM (VR SYSTEM)
210 SWITCH LOADING
211 VAPOR TIGHT

SECTION 300 – STANDARDS

301 PREVENT LEAKS AND SPILLS
302 GASOLINE DELIVERY VESSEL LEAK TEST REQUIRED
303 DISPLAY A VALID DECAL
304 PURGING PROHIBITED
305 EXEMPTIONS

SECTION 400 – ADMINISTRATIVE REQUIREMENTS

401 TESTING
402 TIME FRAME FOR INSTALLATION OF CONTROL DEVICE

SECTION 500 – RECORDS AND MONITORING

501 RECORDKEEPING AND REPORTING REQUIREMENTS
502 MONITORING FOR LEAKS
503 COMPLIANCE DETERMINATION
504 TEST MZETHODS

Revised 07/13/88
Revised 11/16/92
Revised 05/05/99
Revised 09/25/13

MARICOPA COUNTY
AIR POLLUTION CONTROL REGULATIONS

REGULATION III – CONTROL OF AIR CONTAMINANTS

RULE 352
GASOLINE DELIVERY VESSEL TESTING AND USE

SECTION 100 – GENERAL

101 **PURPOSE:** To limit emissions of volatile organic compounds (VOC) from gasoline delivery vessels.

102 **APPLICABILITY:** This rule applies to any gasoline delivery vessel which is used to receive or deliver gasoline within Maricopa County, and to all persons who own, operate, maintain, repair, or test such a vessel.

SECTION 200 – DEFINITIONS: For the purpose of this rule, the following definitions shall apply, in addition to those definitions found in Rule 100 (General Provisions and Definitions) of these rules. In the event of any inconsistency between any of the Maricopa County air pollution control rules, the definitions in this rule take precedence.

201 **2-POINT SYSTEM:** A fill pipe and a vapor-recovery pipe pair which are in close proximity to one another and are connected directly to and emerge directly above the tank they serve.

202 **EXCESS GASOLINE DRAINAGE:** More than 10 milliliters (2 teaspoonsful) of liquid gasoline lost in the process of connecting or disconnecting a gasoline delivery hose, or any quantity of gasoline lost during those processes that wets any area(s) on the ground having an aggregate area greater than 113 square inches, or the perimeter of which would encompass a circle of 12 inches (30.5 cm) diameter.

203 **GASOLINE:** Any petroleum distillate or blend of petroleum distillate with other combustible liquid(s), such as alcohol, that is used as a fuel for internal combustion engines and has a Reid vapor pressure between 4.0 and 14.7 psi (200–760 mm Hg.) For the purposes of this rule, liquefied petroleum gas (LPG) is excluded.

204 **GASOLINE DELIVERY VESSEL:** Any vehicular-mounted container such as a tanker truck, tank trailer, cargo tank or any other wheel-mounted container used to transport gasoline. This includes any hoses the vessel carries through which deliveries must be made.

205 **GASOLINE VAPORS:** Vapors, originating from liquid gasoline, that are usually found in mixture with air. Included are any droplets of liquid gasoline or of gasoline-vapor condensate that are entrained by the vapor.

206 **LEAK FREE:** Having no single gasoline leak of more than 3 drops per minute from a gasoline delivery vessel, including fill hose(s) and vapor hose(s), but not including the disconnecting or connecting of either a gasoline hose from a gasoline fill line or a vapor hose from a vapor line.

207 **MARICOPA COUNTY (MC) PRESSURE TEST:** The complete pressure, vacuum, and vapor-valve testing of a gasoline delivery vessel that is performed according to Maricopa County specifications as described in subsection 302.2 of this rule.

208 **PURGING:** Removing, cleaning, or scouring out gasoline vapors from all or a portion of a delivery vessel by active or passive means and emitting the vapors into the atmosphere.

209 **STAGE 1 VAPOR RECOVERY SYSTEM (VR SYSTEM):** Any piping, hoses, equipment, and/or devices which are used to collect, store, or process gasoline vapors displaced by the delivery of gasoline and also by the onloading of gasoline into a vapor laden delivery vessel.

210 **SWITCH LOADING:** Loading diesel fuel into a delivery vessel whose previous load was gasoline; or loading any liquid not subject to this rule into a delivery vessel whose previous load was gasoline.

211 **VAPOR TIGHT:** A condition in which a suitable detector at the site of (potential) leakage of vapor shows less than 10,000 ppmv when calibrated with methane; or the detector shows less than 1/5 LEL (lower explosive limit) subsequent to calibration with a gas specified by the manufacturer and is used according to the manufacturer's instructions.

SECTION 300 – STANDARDS

301 PREVENT LEAKS AND SPILLS:

301.1 **Vessel Integrity:** In Maricopa County, no person shall store or transport gasoline in or otherwise use or operate any gasoline delivery vessel unless such vessel is designed and maintained to be vapor tight and leak free.

301.2 **Onloading Measures:**

a. At any bulk loading rack, connect a vapor return hose before connecting any loading hose.

b. At a bulk plant, connect an additional vapor hose before connecting any additional loading hose, unless an assisted vapor return system is serving the vapor hose that is already connected.

c. Use a bucket or other effective capture device to catch any liquid dripping during the connection or disconnection of both the loading hose from the truck and the vapor hose from the loading dock's vapor receiving pipe.

(1) Either dispose of the captured liquid in a tank designated for that purpose, or use a receptacle or a material designed to absorb the liquid.

(2) Any gasoline that escapes or spills must be collected and contained.

301.3 Prevent Spills and Excess Drainage: A driver/operator of a gasoline delivery vessel shall:

a. Thoroughly drain a fill hose and a vapor recovery hose into the dispensing tank before disconnecting it from the tank's fittings.

b. Connect and disconnect fill hoses and vapor recovery hoses in such a way as to prevent excess gasoline drainage (more than 2 teaspoonsful) from escaping from the hose in one connect/disconnect cycle.

c. Spills and any gasoline that is deposited in or on an area other than within the dispensing tank shall be collected and contained. This can include, but is not limited to, the correct use of buckets and/or absorbent material designed for the purpose, and the correct disposal of the collected gasoline.

301.4 Vapor Hose use Required at Retail Gas Stations:

a. A driver/operator shall not deliver gasoline to a dispensing tank at a retail gas station unless a vapor hose is first connected from the vessel to a vapor return-line serving the tank.

b. No delivery shall be made to a retail tank if:

(1) it is not served by a vapor return, or

(2) if it has a locked cap that cannot be removed, or

(3) if broken fittings prevent correct connection of the vapor hose.

301.5 Prevent Vapor Escape During Deliveries: For gasoline dispensing tanks that are equipped with a Stage 1 vapor recovery system (VR System):

a. During delivery, the vessel operator shall not remove the lid of a fill tube unless every other fill tube either has a lid fastened in place or a delivery hose connecting it to the delivery vessel.

b. Connect a vapor recovery hose before connecting any gasoline delivery hose.

c. Disconnect a delivery hose from a tank before disconnecting the vapor recovery hose.

d. **Restriction on Multiple Connection:** A delivery vessel shall not simultaneously have more than one gasoline delivery hose connected, unless each delivery hose is connected to a dispensing tank's 2-point system that already has a vapor hose connecting it to the vessel.

301.6 **Vapor Recovery Systems Having Remote Vapor Return Lines:** If a delivery vessel's vapor hose is connected to a vapor return line that is not part of a 2-point system, then there shall not be more than one gasoline delivery hose connected to the vessel, and no other hoses connected to a fill tube; viz., no more than one compartment of the delivery vessel shall be emptied at a time.

302 **GASOLINE DELIVERY VESSEL LEAK TEST REQUIRED:** A gasoline delivery vessel shall first pass the MC Pressure Test before delivering or onloading gasoline within Maricopa County, and to continue, must pass the MC Pressure Test each year thereafter. This does not apply to loads that originate solely in another state, nor to loads originating in Maricopa County that are not delivered in Maricopa County.

302.1 **Testing:** The MC Pressure Test shall be performed according to subsection 302.2.

a. Scheduling and notification of an initial test or annual retest shall be done in accordance with subsection 401.1 and subsection 401.3.

b. A tester shall record the results of a Pressure Test according to the format in subsection 501.2.

c. A valid Maricopa County Air Quality Department decal shall be affixed to the vessel consequent to passing the MC Pressure Test before the vessel may deliver or onload gasoline.

d. An owner or operator of a delivery vessel shall comply with subsection 401.2 registration requirements to obtain a valid Maricopa County Air Quality Department decal after a successful MC Pressure Test.

302.2 **MC Pressure Test:** A vessel that is being MC Pressure Tested shall pass all 3 of the following pressure subtests, in the following order, and use the same vapor hose during the test as will be used for deliveries by that same unit:

a. **Positive Pressure Subtest:** Lose no more than 1.0 inch (25.4 mm) of water column in 5.0 minutes, when pressurized to a gauge pressure of 18 inches (45.7 cm) of water in 2 consecutive runs according to procedures

in subsections 5.1.1 through 5.2.7 of EPA Method 27, as incorporated by reference in Section 504 of this rule; and

b. Vapor Valve Subtest: Lose no more than 5.0 inches (127 mm) of water column in 5.0 minutes, measured in the vapor system after the vessel compartments are first collectively pressurized to a gauge pressure of 18 inches (45.7 cm) of water and then the vapor valves are closed, per subsection 503.2 of this Rule 352; and

c. Partial Vacuum Subtest: Gain no more than 1.0 inch (25.4 mm) of water column in 5.0 minutes, when initially evacuated to a gauge pressure of 6 inches (15.2 cm) of water, in 2 consecutive runs, per subsections 5.3.1 through 5.3.7 of EPA Method 27, as incorporated by reference in Section 504 of this rule.

d. Pressure Instability: A subtest is invalidated if during either of the pressure subtests, more than 1/2 inch water pressure is gained, or if during the vacuum test the vacuum is increased by more than minus ½ inch.

302.3 A vessel shall be repaired, retested, and pass all 3 subtests in the same testing period within 15 days of testing if it does not pass all 3 subtests of subsection 302.2 of this rule.

303 DISPLAY A VALID DECAL: Each gasoline delivery vessel shall clearly display a valid Maricopa County Air Quality Department decal that is permanently mounted near the front on the right (passenger) side of the vessel.

304 PURGING PROHIBITED:

304.1 No person shall purge gasoline vapors into the atmosphere from a delivery vessel unless the following conditions are met:

a. VOC emissions shall be reduced at least 90% by weight, including capture and processing, by a control device having a Maricopa County Air Pollution Permit; and

b. Such purging shall be done only after all delivery valves are opened and any liquid gasoline outflow is captured in a container having an attached lid which is kept closed when not receiving or pouring gasoline.

304.2 An operator of a delivery vessel shall not purge gasoline vapors from such vessel as a passive result of switch loading, except for vessels exempted by subsection 305.1.

305 EXEMPTIONS:

305.1 A delivery vessel is exempt from pressure test requirements of Section 302 if all of the following conditions are met:

a. The vessel was placed in operation before July 13, 1988; **and**

b. The vessel transported gasoline within Maricopa County before January 1, 1998; **and**

c. The vessel never loads at a gasoline terminal; **and**

d. The vessel serves only farm tanks and/or those non-resale dispensing operations having a yearly throughput not exceeding 120,000 gallons of gasoline, verified by monthly records pursuant to subsection 501.1a; **and**

e. The vessel either has a sticker affixed to it that indicates to a bulk plant operator that the vessel may be loaded in Maricopa County, or has an affidavit signed by an owner or officer of the operating company filed with the Maricopa County Air Quality Department, with a complete copy of the signed affidavit available in the vehicle for inspection by a bulk plant operator or the Control Officer.

305.2 An operator of a delivery vessel exempted by subsection 305.1 is allowed to incidentally purge gasoline vapors from such vessel as a passive result of loading, or briefly when lids/ports must be open for inspection.

305.3 Opening Hatches on Non-Exempt Vessels:

a. Required by Rule: Owners/operators, their contractors, and authorized government agents may open vapor containment equipment on a nonexempt gasoline delivery vessel while performing operations required by governmental agencies, but shall be restricted as follows, unless approved in advance by the Control Officer:

(1) Wait at least 3 minutes after onloading is complete and after a delivery vessel has stopped before opening its hatch or other vapor seal.

(2) Reclose hatch or other sealing device within 3 minutes of completing the required procedures.

(3) Limit windspeed at opened hatch or other opened sealing device to not more than 3 mph (1.34 m/sec), using a barrier if necessary.

b. Defueling: Hatches of a delivery vessel may be open for monitoring to prevent overflow during the period that the vessel is receiving gasoline from a tank or other source, if so required by a local fire code or other ordinance.

c. Connecting Coaxial Fittings: Requirements for first connecting a vapor hose before a gasoline delivery hose do not apply to coaxial VR connection fittings.

SECTION 400 – ADMINISTRATIVE REQUIREMENTS

401 **TESTING:** Testing required by subsections 302.2a, b, and c shall be conducted by the owner or operator of the delivery vessel, or by a consultant, at the expense of the owner or operator. The Control Officer may at any time observe the tests. An owner or operator shall comply with the following provisions:

401.1 **Notification of Required Testing:** The owner, operator, or tester shall notify the Control Officer as follows for each vessel being tested to meet requirements of Section 302 or subsection 304.1 of this rule:

a. Contact the Control Officer during normal business hours of the Department at least 4 hours prior to testing; and

b. Give an estimated start time that is no more than 1 hour prior to actual start time;

c. Except for weekend testing, the Control Officer shall be notified no more than 24 hours in advance of testing;

d. For weekend testing, the notification shall be given, along with the date of testing, prior to 2 PM on Friday (or Thursday, if Friday is a County holiday);

e. Give the location of the testing;

f. Any testing that is performed in the 8 hour period between 9 PM and 5 AM is not valid for purposes of satisfying Section 302 requirements, except if the Control Officer gives specific, advance permission for a particular occasion.

401.2 **Registration:** To obtain a decal, do the following for each vessel that passes the required annual test:

a. Assemble in 1 packet the following 3 items:

(1) A properly completed "APPLICATION FOR AIR POLLUTION VAPOR RECOVERY CERTIFICATION" (also called "The Application"),

(2) A properly completed copy of the Maricopa County Air Quality "Tank Truck Leak Certification Check List", and

(3) The annual fee remittance. (The fee amount appears in Rule 280.)

b. Send or convey this single packet to the Maricopa County Air Quality Department at the address on the top of the application.

c. Upon receipt of these 3 properly completed items, a decal will be issued by the Control Officer.

401.3 Expiration:

a. A decal that is issued to a vessel that passed its test in the 4-month period between March 1 through June 30 shall expire at 11:59 PM on June 30 of the following year.

b. A decal that is issued to a vessel that passed its test in the period after June 30 of the previous year and before March 1 of the current year shall expire at 11:59 PM on June 30 of the year. For example, if the test is passed between July 1, 2000, through February 28, 2001, the decal expires on June 30, 2001.

401.4 Loss:

a. An owner or operator shall notify the Control Officer immediately if a valid decal/sticker is lost, defaced, or destroyed.

b. The Control Officer may require a demonstration of need for replacement.

c. If Rule 280 so provides, the Control Officer may charge a fee for reissue or substitute issue of a lost, defaced, or destroyed decal/sticker, if the Control Officer determines that the Department is not at fault.

402 TIME FRAME FOR INSTALLATION OF CONTROL DEVICE: An owner or operator of a vessel testing operation who chooses to comply with the Section 304 purging provisions through the use of a control device shall submit by August 1, 1999, an application for a Maricopa County Air Pollution Control Permit and an Operation and Maintenance Plan for the control device. The device shall be fully functioning by May 1, 2000.

SECTION 500 – RECORDS AND MONITORING

501 RECORDKEEPING AND REPORTING REQUIREMENTS:

501.1 The owner or operator of a gasoline delivery vessel subject to this rule shall maintain records of all certification, testing, and repairs.

a. Such records must be maintained in a legible, readily available condition for at least 5 years after the date the testing and repair is completed.

b. Upon verbal or written request by the Control Officer, or a designee of the Control Officer, records shall be provided within a reasonable time. If the Control Officer is at the site where requested records are kept, records shall be provided without delay.

501.2 The records of the certification testing required by Section 302 must be recorded in both of the following documents: the "Application for Air Pollution Vapor Recovery Certification" and the "Tank Truck Leak Certification Check List". Pressure and vacuum shall be recorded to no less than the nearest quarter inch or half-centimeter of water column. The minimum requirements for each of these 2 documents follow:

a. For the "Application for Air Pollution Vapor Recovery Certification":

(**1**) Owner's name and address.

(2) Tank ID number, the location of the test, the time of the test, and the date of the test.

(3) For the pressure subtest, 2 readings: the change in pressure (in inches H2O) for Run 1 and the change in pressure for Run 2.

(4) For the vapor-valve subtest (subsection 302.2b), 1 reading: the total change in pressure during the test.

(5) For the vacuum test, 2 readings: the total change in vacuum during Run 1 and the same for Run 2.

b. The "Tank Truck Leak Certification Check List" (or its successor document) shall contain at least the following information:

(1) The same information required in subsections a(1) and a(2) of this subsection 501.2; **and**

(2) The time the subtest began, the initial pressure of the subtest, the finish time, the final pressure of the subtest, and the pressure change between the start and end of the subtest; the vessel's unit number, manufacturer's serial number, the tank capacity, whether the tank was purged of gasoline vapors, and the date of the next leakage test if the set of 3 subtests are not all passed.

(3) If the initial pressure test was not passed, one set of readings in the row "Initial Test", also giving the elapsed time if the pressure reached zero before 5 minutes. For example, the row marked "Initial Test" will normally contain the results of the initial failed subtest if any repairs were made subsequent to any pressurization or evacuation of the tank.

502 **MONITORING FOR LEAKS:** The Control Officer may at any time monitor a delivery vessel, including the vapor collection system, for vapor and liquid leaks to ascertain if it is vapor tight and leak free. Leakage of vapor exceeding 1/5 of the lower explosive limit, or 10,000 ppm as methane, when performed according to subsection 504.4, shall be an exceedance of the vapor-tight standard of subsection 301.1.

503 COMPLIANCE DETERMINATION: When more than one test method is permitted for a determination, an exceedance of the limits established in the rule determined by any of the applicable test methods constitutes a violation of this rule.

503.1 Pressure and Vacuum Tests: The subtests to determine compliance with subsection 302.2a and subsection 302.2c of this rule shall be performed according to EPA Method 27, except that the definition of gasoline shall be according to this Rule 352.

503.2 Test of Internal Vapor Valves: The test to determine compliance with subsection 302.2b shall be performed immediately after successfully passing the pressure subtest (pursuant to subsection 302.2a), without performing any intervening maintenance or repair on the vapor valves.

503.3 Confirmation of a vapor leak detected on a vessel during onloading shall be determined by properly deploying a pressure tap adapter that conforms to Method 27 provisions, and demonstrating the leak according to subsection 504.4, while the pressure is less than 20 inches of water column.

503.4 Pursuant to Section 203, Reid vapor pressure shall be determined using American Society for Testing and Materials (ASTM) Method D 323-90.

504 TEST METHODS: The EPA test method as it exists in the Code of Federal Regulations (CFR) (July 1, 1998), as listed below, is adopted by reference. The other test methods listed here are also adopted by reference, each having paired with it a specific date that identifies the particular version/revision of the method that is adopted by reference. These adoptions by reference include no future editions or amendments. Copies of test methods referenced in this Section 504 are available at the Maricopa County Air Quality Department, 1001 N. Central Ave., Phoenix, Arizona 85004.

504.1 EPA Method 27 ("Determination Of Vapor Tightness Of Gasoline Delivery Tank Using Pressure-Vacuum Test") in 40 CFR 60, Appendix A.

504.2 American Society for Testing and Materials (ASTM) Method D 323-90, 1990 (Reid vapor pressure).

504.3 Test of Internal Vapor Valves:

a. Pressurize the delivery vessel to 18 inches (45.7 cm) of water column, using the first 2 procedures of the "Pressure Test" section of EPA Method 27.

b. Close all the vessel's internal valves, including the internal vapor valves, thereby isolating the vapor system (vapor return line plus vapor manifold) from the compartments.

c. Relieve the pressure in the vapor return line (to atmospheric pressure).

d. Seal the vapor return line and after 5.0 minutes record the pressure present in the vapor system.

504.4 Delivery Vessel Vapor Tightness Test: A vapor tight condition will be determined for vessels by the following method:

a. Calibration: Within 4 hours prior to monitoring, the combustible gas detector or organic vapor analyzer shall be suitably calibrated for a 20 percent LEL response, or to 10,000 ppm with methane.

b. Probe Distance: The probe inlet shall be 1 inch (2.5 cm) or less from the potential leak source when searching for leaks. The probe inlet shall be 1 inch (2.5 cm) from the leak source when the highest detector reading is being determined for a discovered leak. When the probe is obstructed from moving within 1 inch (2.5 cm) of an actual or potential leak source, the closest practicable probe distance shall be used.

c. Probe Movement: The probe shall be moved slowly, not faster than 1.6 inches per second (4 centimeters per second). If there is any meter deflection at a potential or actual leak source, the probe shall be positioned to locate the point of highest meter response.

d. Probe Position: The probe inlet shall be positioned in the path of the vapor flow from a leak such that the central axis of the probe-tube inlet shall be positioned coaxially with the path of the most concentrated vapors.

e. Data Recording: The highest detector reading and location for each incidence of detected leakage shall be recorded, along with the date and time. If no gasoline vapor is detected, that fact shall be entered into the record.

REGULATION III – CONTROL OF AIR CONTAMINANTS

RULE 353
GASOLINE IN STATIONARY DISPENSING TANKS

INDEX

SECTION 100 – GENERAL

101 PURPOSE

102 APPLICABILITY

SECTION 200 – DEFINITIONS

201 CARB-CERTIFIED

202 DISPENSING TANK

203 EXCESS GASOLINE DRAINAGE

204 GASOLINE

205 GASOLINE DELIVERY VESSEL

206 GASOLINE DISPENSING OPERATION

207 GASOLINE VAPORS

208 INSTALLER

209 LEAK-FREE

210 OFFSET FILL LINE

211 POPPETTED DRY BREAK

212 SIDE FILL PIPE

213 STAGE 1 VAPOR RECOVERY

214 TANK CAPACITY

215 TOP FILL OR VERTICAL FILL PIPE

216 VAPOR LOSS CONTROL DEVICE

217 VAPOR-TIGHT

SECTION 300 – STANDARDS–VAPOR LOSS CONTROL MEASURES REQUIRED

301 BASIC TANK INTEGRITY

302 FILL PIPE REQUIREMENTS

303 VAPOR RECOVERY SYSTEM

304 EQUIPMENT MAINTENANCE AND USE REQUIRED

305 EXEMPTIONS

SECTION 400 – ADMINISTRATIVE REQUIREMENTS

401 TANKS THAT LOST THEIR EXEMPTION
402 BURDEN OF PROOF
403 CARB DECERTIFICATION
404 OTHER AGENCIES' REQUIREMENTS

SECTION 500 – MONITORING AND RECORDS

501 COMPLIANCE INSPECTIONS
502 RECORDKEEPING
503 COMPLIANCE DETERMINATION
504 TEST METHODS

Revised 07/13/88
Revised 04/06/92
Revised 06/16/99
Revised 09/25/13

MARICOPA COUNTY
AIR POLLUTION CONTROL REGULATIONS

REGULATION III – CONTROL OF AIR CONTAMINANTS

RULE 353
GASOLINE IN STATIONARY DISPENSING TANKS

SECTION 100 – GENERAL

101 **PURPOSE:** To limit VOC (volatile organic compound) emissions from gasoline stored in stationary dispensing tanks, and from gasoline delivered into such tanks.

102 **APPLICABILITY:** This rule is applicable to gasoline stored in or transferred into any stationary dispensing tank with a capacity of more than 250 gallons (946 l). This includes gas stations and other gasoline-dispensing facilities, including those located at airports.

SECTION 200 – DEFINITIONS: For the purpose of this rule, the following definitions shall apply, in addition to those definitions found in Rule 100 (General Provisions and Definitions) of these rules. In the event of any inconsistency between any of the Maricopa County air pollution control rules, the definitions in this rule take precedence.

201 **CARB-CERTIFIED:** A vapor control system, subsystem, or component that has been specifically approved by system configuration and manufacturer's name and model number in an executive order of the California Air Resources Board (CARB), pursuant to Section 41954 of the California Health and Safety Code. Such orders are included in CARB's publication, "Gasoline Facilities - Phase I & II", which is available as set forth in subsection 503.4.

202 **DISPENSING TANK:** Any stationary tank which dispenses gasoline into a motorized vehicle's fuel tank that directly fuels its engine(s). This includes aircraft.

203 **EXCESS GASOLINE DRAINAGE:** More than 10 milliliters (2 teaspoonsful) of liquid gasoline lost from the end of a fill hose or vapor hose in the process of connecting or disconnecting the hose; or any quantity of gasoline escaping out the end of such a hose that wets any area(s) on the ground having an aggregate area greater than 113 square inches, or the perimeter of which would encompass a circle of 12 inches (30.5 cm) diameter. This does not include drainage into a filltube's spill containment receptacle.

204 **GASOLINE:** Any petroleum distillate or blend of petroleum distillate with other combustible liquid(s), such as alcohol, that is used as a fuel for internal combustion engines and has a vapor pressure between 4.0 and 14.7 psi (200–760 mm Hg.), as

determined by the applicable method pursuant to subsections 503.2 and 504.2. For the purposes of this rule, liquefied petroleum gas (LPG) is excluded.

205 **GASOLINE DELIVERY VESSEL:** Any vehicular-mounted container such as a tanker truck, tank trailer, cargo tank or any other wheel-mounted container used to transport gasoline. This includes any hosing the vessel carries through which deliveries must be made.

206 **GASOLINE DISPENSING OPERATION:** All gasoline dispensing tanks and associated equipment located on one or more contiguous or adjacent properties under the control of the same person (or persons under common control).

207 **GASOLINE VAPORS:** Vapors, originating from liquid gasoline, that are usually found in mixture with air. Included are any droplets of liquid gasoline or of gasoline vapor condensate that are entrained by the vapor.

208 **INSTALLER:** The person, as defined in Rule 100, that installs VOC control equipment at a dispensing facility.

209 **LEAK-FREE:** A condition in which there is no liquid gasoline escape or seepage of more than 3 drops per minute from gasoline storage, handling, and ancillary equipment, including, but not limited to, seepage and escapes from above ground fittings.

210 **OFFSET FILL LINE:** Any dispensing tank's gasoline fill line (piping and fittings) which contains one or more bends.

211 **POPPETTED DRY BREAK:** A Stage 1 vapor recovery device that opens only by connection to a mating device to ensure that no gasoline vapors escape from the dispensing tank before the vapor return line is connected.

212 **SIDE FILL PIPE:** A fill pipe that enters a dispensing tank through the tank's side.

213 **STAGE 1 VAPOR RECOVERY:** At a gasoline dispensing facility, the use of installed vapor recovery equipment designed to reduce by at least 90% the VOC vapor that would otherwise be displaced into the atmosphere from a dispensing tank when gasoline is delivered into the tank by a delivery vessel. This reduction may be done either by capturing the displaced vapors within the delivery vessel, and/or by processing the vapors on site with an emission processing device (such as a VOC oxidizer).

214 **TANK CAPACITY:** The maximum volume of liquid gasoline a particular tank is allowed to store while still complying with all applicable rules, including local, state, and Federal rules.

215 **TOP FILL or VERTICAL FILL PIPE:** A fill pipe that enters a dispensing tank through its top.

216 VAPOR LOSS CONTROL DEVICE: Any piping, hoses, equipment, or devices which are used to collect, store and/or process VOC vapors at a service station or other gasoline dispensing operation.

217 VAPOR-TIGHT: A condition in which an organic vapor analyzer (OVA) or a combustible gas detector (CGD) at a potential VOC leak source shows either less than 10,000 ppm when calibrated with methane, or less than 1/5 of the lower explosive limit, when prepared according to the manufacturer and used according to subsection 504.3 of this rule.

SECTION 300 – STANDARDS–VAPOR LOSS CONTROL MEASURES REQUIRED: No person shall transfer or permit the transfer of gasoline from any delivery vessel into any stationary dispensing tank located above or below ground with a capacity of more than 250 gallons (946 l) unless the following conditions are met:

301 BASIC TANK INTEGRITY: No vapor or liquid escapes are allowed through a dispensing tank's outer surfaces, nor from any of the joints where the tank is connected to pipe(s), wires, or other system.

301.1 VOC Emission Standard:

a. Gasoline delivery operations shall be vapor-tight, as defined in Section 218, except for tanks exempted by Section 305 from Stage 1 vapor recovery requirements.

b. Tanks and their fittings shall be vapor-tight except for the outlet of a pressure/vacuum relief valve on a dispensing tank's vent pipe. Specifically, this means that at a probe tip distance of 1 inch (2.5 cm) from a surface, no vapor escape shall exceed 1/5 of the lower explosive limit. This applies to tanks containing gasoline regardless of whether they are currently being filled, and to caps and other tank fittings.

301.2 Leakage Limits–Liquid Leaks and Spills:

a. Gasoline storage and receiving operations shall be leak-free. Specifically, no liquid gasoline escape of more than 3 drops per minute is allowed. This includes leaks through the walls of piping, fittings, fill hose(s), and vapor hose(s).

b. There shall be no excess gasoline drainage from the end of a fill hose or a vapor hose. Specifically, not more than 2 teaspoonsful of gasoline shall be lost in the course of a connect or disconnect process.

301.3 Spill Containment Equipment: The entire spill containment system including gaskets shall be kept vapor-tight.

a. The Spill Containment Receptacle:

(1) The outer surface of the spill containment receptacle shall have no holes or cracks and shall allow no vapors to pass from the dispensing tank through it to the atmosphere.

(2) Spill containment receptacles shall be kept clean and free of foreign material at all times.

(3) Spill containment receptacles shall be inspected at least weekly. Records of inspection and cleaning shall be kept according to subsection 502.2.

b. If the spill containment is equipped with a passageway to allow material trapped by the containment system to flow into the interior of the dispensing tank:

(1) The passageway shall be kept vapor-tight at all times, except during the short period when a person opens the passageway to immediately drain material trapped by the containment system into the tank.

(2) The bottom of the receptacle shall be designed and kept such that no puddles of gasoline are left after draining through the passageway has ceased.

c. The dispensing tank owner/operator is responsible for assuring that before a delivery vessel leaves the premises after a delivery:

(1) Any gasoline in a dispensing tank's spill containment receptacle has been removed.

(2) Any gasoline that a person has taken out of a spill receptacle, as a free liquid or as absorbed into/onto other material removed from the receptacle, shall be contained in such a way that VOC emission is prevented; disposal in conformance with applicable hazardous waste rules is sufficient to meet this requirement.

(3) Any plunger/stopper assembly is unimpeded and sealing correctly.

d. Criteria Of Violation/Exceedance for Spill-Containment Receptacles: A reading on a CGD or OVA exceeding 1/5 LEL (10,000 ppm as methane) is an exceedance. The procedure for performing a determination is set forth in subsection 504.3.

302 FILL PIPE REQUIREMENTS:

302.1 Each fill-line into a stationary dispensing tank shall be equipped with a permanent submerged fill pipe that has a discharge opening which is completely submerged when the liquid level is 6 inches above the tank bottom.

a. Threads, gaskets, and mating surfaces of the fill pipe assembly shall be designed and maintained tight. There shall be no liquid or vapor leakage at the joints of the assembly.

b. An owner/operator is responsible to assure that external fittings of a fill pipe assembly shall be inspected weekly to assure that cap, gasket, and piping are intact and are not loose.

(1) A record of the inspection shall be made according to subsection 502.2.

(2) An owner/operator shall act to prevent driver/deliverers from connecting the delivery hose coupling to a fill pipe coupling with so much twisting force that the fill pipe assembly is loosened. One method of complying is to have a CARB-certified swivel coupling as part of the fill pipe assembly (reference subsection 503.4 for CARB).

302.2 Fill Pipe Caps:

a. The cap shall have a securely attached, intact gasket.

b. The cap and its gasket shall always function properly, latch completely so that it cannot then be easily twisted by hand, and have no structural defects.

c. The cap of a gasoline fill pipe shall always be fastened securely on the fill pipe except immediately before, during, and immediately after:

(1) "Sticking" the tank to measure gasoline depth.

(2) Delivering gasoline into the tank.

(3) Doing testing, maintenance or inspection on the gasoline/vapor system.

d. Do not unfasten or remove a fill pipe cap unless every other fill pipe is either securely capped or connected to a delivery hose, except as otherwise needed for testing, maintenance, or inspection.

302.3 Restrictions on Multiple Fill Pipes:

a. A tank installed after December 31, 1998, shall not be equipped with more than one fill pipe unless more than one fill pipe is specifically allowed in the Air Pollution Permit and there is a 2-point system having a properly installed vapor return pipe close to each fill pipe.

b. Restriction on Concurrent Delivery: An owner/operator of a dispensing tank fitted with more than 1 fill pipe shall prevent concurrent delivery of gasoline by a gasoline delivery vessel to more than 1 fill pipe of the tank

by locking additional fill pipes shut or by using other permanent means, unless:

(1) Concurrent delivery is specifically allowed in the facility's Air Pollution Permit; and

(2) All fill pipes in use are part of a 2-point vapor recovery system; and

(3) Before making a concurrent delivery through a tank's second fill pipe, an additional vapor return hose from the delivery vessel must first be attached to the vapor return line associated with the second fill pipe.

302.4 Fill Pipe Obstructions:

a. Any type of screen and/or other obstructions in fill pipe assemblies shall be permanently removed by November 1, 1999, unless it is specifically allowed by an Air Pollution Permit or is CARB-certified, as referenced in subsection 503.4.

b. A screen or other obstruction, allowed by Air Pollution Permit or CARB, shall be temporarily removed by the owner/operator of a dispensing tank prior to inspection by the Control Officer to allow measurements pursuant to this rule.

302.5 Overfill Protection Equipment: Overfill prevention equipment shall be vapor-tight to the atmosphere. Any device mounted within the fill pipe shall be so designed and maintained that no vapor from the vapor space above the gasoline within the tank can penetrate into the fill pipe or through any of the fill pipe assembly into the atmosphere.

303 VAPOR RECOVERY SYSTEM:

303.1 Gasoline vapors displaced from a dispensing tank by gasoline being delivered shall be handled by a Stage Vapor Recovery System, unless the tank is exempted by Section 305.

303.2 Stage 1 Vapor-Recovery System Configuration (Reference subsection 503.4 for identification of CARB-certified components):

a. Replacement: After June 16, 1999, no part of a vapor recovery system for which there is a CARB specification shall be replaced with anything but CARB-certified components.

b. Vapor Valves:

(1) All vapor return lines from dispensing tanks shall be equipped with CARB-certified, spring-loaded, vapor-tight, poppetted dry break valves.

(2) Vapor valves shall be inspected weekly to determine if closure is complete and gaskets are intact; a record shall be made pursuant to subsection 502.2.

c. Above Ground Systems: After June 16, 1999, an above ground dispensing tank shall have CARB-certified fittings wherever CARB so specifies.

d. New Systems: Each new gasoline tank installation shall use CARB-certified fittings exclusively wherever CARB so specifies, and:

(1) Shall have its own separate, functioning 2-point vapor return line;

(2) Is allowed to have a combination vapor recovery system that in addition to having a separate 2-point Stage 1 vapor return line, also has stage 1 vapor piping/fittings linking it to one or more (other) gasoline dispensing tanks.

e. New Coaxial Prohibited:

(1) No coaxial fill pipes shall be installed after June 16, 1999, in new installations; and

(2) No coaxial fill pipes shall be reinstalled after June 16, 1999, in major modifications in which the top of the tank is exposed and the vapor port bung is pre-configured to accept vapor recovery piping.

304 EQUIPMENT MAINTENANCE AND USE REQUIRED: All vapor loss control equipment shall be installed as required, operated as recommended by the manufacturer, and maintained leak-free, vapor-tight and in good working order.

304.1 Both the owner/operator of a dispensing tank and the driver/operator of a delivery vessel delivering gasoline to the fuel dispensing tank equipped with vapor recovery shall have responsibility to assure that vapor recovery equipment (if required by this rule) is properly connected and in use at all times while gasoline is actively being dropped/delivered.

304.2 The owner/operator of a fuel dispensing tank not exempted by Section 305 shall refuse delivery of gasoline from a delivery vessel which does not bear a current pressure test certification decal issued by the Control Officer. This provision does not apply during times when the facility is unattended or there is only one person under control of the dispensing facility present.

304.3 Coaxial Systems: Both spring-loaded and fixed coaxial fill tubes shall be maintained according to the standards of their manufacturer(s) and be operated so that there is no obstruction of vapor passage from the tank to the delivery vessel.

305 EXEMPTIONS:

305.1 Dispensing Tanks for Farm Operations: Any stationary gasoline dispensing tank used exclusively for the fueling of implements of normal farm operations is exempt from this rule, except for cap, spills, and liquid leak-age provisions in Section 301.

305.2 The Vapor Recovery Provisions of Section 303 of this Rule Shall Not Apply to the Following Stationary Gasoline Dispensing Tanks:

a. Non-Resale Dispensing Operations From Non-Farm Tanks: Any stationary gasoline dispensing operation receiving less than 120,000 gallons of gasoline in any 12 consecutive calendar months, dispensing no resold gasoline, and having each gasoline dispensing tank equipped with a permanent submerged fill pipe pursuant to subsection 302.1, is exempt from Section 303. However, any operation shall become subject to the provisions of Section 303 of this rule by exceeding the 120,000 gallon threshold or not abiding by the restrictions, and shall remain subject to such provisions even if annual emissions later fall below this threshold.

b. Dispensing Tanks Of 1000 Gallons Or Less: Any stationary dispensing tank having a capacity of 1000 gallons (3785 l) or less which was installed prior to October 2, 1978, provided that such tank is equipped with a permanent submerged fill pipe. Where, because of government regulation including, but not limited to, Fire Department codes, such a fill pipe cannot be installed, the gasoline shall be delivered into the tank using a nozzle extension that reaches within 6 inches of the tank bottom.

c. Dispensing Tanks with Offset Fill Lines: Any stationary dispensing tank installed prior to October 2, 1978, where the fill line between the fill connection and tank is offset.

SECTION 400 – ADMINISTRATIVE REQUIREMENTS

401 TANKS THAT LOST THEIR EXEMPTION: Tanks that were formerly exempt from a provision prior to June 16, 1999, shall come into compliance by December 1, 1999.

402 BURDEN OF PROOF:

402.1 Proving Exempt Status: The burden of proof of eligibility for exemption from a provision of this rule is on the applicant. Persons seeking such an exemption shall maintain adequate records and furnish them to the Control Officer upon request.

402.2 Providing Proof of Equipment Compliance:

a. It is the responsibility of the installer of vapor control equipment, when so required by the Control Officer, to provide proof that a vapor recovery system or its modifications meet the requirements of this Rule 353.

b. If the owner/operator or the equipment supplier voluntarily provides such proof, the Control Officer has the option to waive the subsection 402.2a requirement that the installer provide this proof.

403 **CARB DECERTIFICATION:** A person shall not install or reinstall a component related to vapor recovery that has been decertified by CARB in "Gasoline Facilities - Phase I & II" publication, referenced in subsection 503.4.

404 **OTHER AGENCIES' REQUIREMENTS:** Compliance with this rule does not relieve or otherwise affect a person's obligation to comply with any other applicable federal, state, or local legal requirement, including, but not limited to, rules promulgated by the Arizona Department of Weights and Measures, local fire department codes, and local zoning ordinances.

SECTION 500 – MONITORING AND RECORDS:

501 **COMPLIANCE INSPECTIONS:** Any dispensing tank required by this rule to be equipped with vapor loss control devices may be subject to monitoring for vapor tightness and leak tightness during any working hours. Such a tank may be opened for gauging or inspection when loading operations are not in progress, provided that such tank is part of an open system or is served by a positive-pressure relief valve with a relief setting not exceeding +1/2 lb psig.

502 **RECORDKEEPING:** The owner or operator of each gasoline dispensing facility in Maricopa County shall maintain records as follows:

502.1 The total amount of gasoline received each month shall be recorded by the end of the following month.

502.2 The owner or operator of a gasoline dispensing facility shall cause weekly records of fill tube, vapor valve and spill containment inspection to be kept. The findings of such weekly inspections shall be permanently entered in a record or log book by the end of Saturday of the following week.

502.3 These records and any reports or supporting information required by this rule or by the Control Officer shall be retained for at least 5 years.

502.4 Records of the past 12 months shall be in a readily accessible location and must be made available to the Control Officer without delay upon verbal or written request.

503 **COMPLIANCE DETERMINATION:** The test methods referenced in Section 504 shall be used in the ways given in the subsections that immediately follow. When more than one test method is permitted for a determination, an exceedance of the limits established in this rule determined by any of the applicable test methods constitutes a violation of this rule. For routine information collection, the Control Officer may accept a manufacturer's data sheet (MSDS), data certified by an officer of the supplying company, or test data for the product of inquiry.

503.1 Control efficiency of [emission control device] vapor recovery systems and vapor collection/ processing systems shall be determined according to EPA Method 2A and either EPA Method 25A or 25B (Section 504 and subsection 504.1), or by CARB-approved test methods (Section 504 and subsection 504.4). EPA Method 2B shall be used for vapor incineration devices.

503.2 Vapor pressure of gasoline (reference Section 204) shall be determined using American Society for Testing and Materials (ASTM) Method D323-94 or ASTM Method D4953-93. Method D323-94 shall be used for gasoline either containing no oxygenates or MTBE (methyl tertiary butyl ether) as the sole oxygenate. Method D4953-93 shall be used for oxygenated gasoline.

503.3 Vapor Leaks:

a. If a determination of leak-tight status is to be made on Stage 1 or spill containment equipment at a gasoline dispensing facility or on a delivery vessel at the station, the method in subsection 504.3 shall be used.

b. Subsection 504.3 probe distance and movement parameters not withstanding, if it has been established that there are no other interfering vapor escapes, it is an exceedance if a reading by the Control Officer from an established vapor escape above 1/5 LEL (or 10,000 ppm as methane) is sustained for at least 5 seconds, and the probe is either consistently further than 1 inch from the source and/or the probe is consistently being moved faster than 4 cm per second.

c. The Control Officer may count it as a failure to perform weekly inspections pursuant to subsection 301.3 if foreign material is found in a spill containment receptacle and there is no record of an inspection's being performed in the preceding 10 days.

503.4 The CARB publication, "Gasoline Facilities - Phase I & II", pursuant to sections 41954 through 41962 of the California Health and Safety Code, is adopted by reference, as it exists on June 16, 1999. This publication is available for reference at the Maricopa County Air Quality Department, 1001 N. Central Ave., Phoenix, AZ, 85004. This publication is available for purchase at the (California) Air Resources Board, PO Box 2815, 2020 L Street, Sacramento, CA, 95812-2815; (916) 323-0255 or (916) 322-2886.

504 **TEST METHODS:** The EPA test methods as they exist in the Code of Federal Regulations (CFR) (July 1, 1998), as listed below, are adopted by reference. The CARB test methods as they exist in Stationary Source Test Methods, Volume 2, on April 8, 1999, as listed in subsection 504.4 are adopted by reference. The other test methods listed here are also adopted by reference, each having paired with it a specific date that identifies the particular version/revision of the method that is adopted by reference. These adoptions by reference include no future editions or amendments. Copies of test methods referenced in this Section 504 are available at

the Maricopa County Air Quality Department, 1001 N. Central Ave., Phoenix, AZ, 85004.

504.1 EPA Test Methods:

a. EPA Methods 2a ("Direct Measurement of Gas Volume Through Pipes and Small Ducts"), and 2b ("Determination of Exhaust-Gas Volume Flow-Rate From Gasoline Vapor Incinerators"). Both of the foregoing methods are in 40 CFR 60, Appendix A.

b. EPA Method 25 ("Determination of Total Gaseous Nonmethane Organic Emissions as Carbon") and its submethods (40 CFR 60, Appendix A).

504.2 Gasoline Vapor Pressure:

a. American Society for Testing and Materials (ASTM) Method D323-94 (1994) "Standard Test Method for Vapor Pressure of Petroleum Products (Reid Method)

b. American Society for Testing and Materials (ASTM) Method D4953-93 (1993) "Standard Test Method for Vapor Pressure of Gasoline and Gasoline-Oxygenate Blends (Dry Method)

504.3 Leak Detection Test Method:

a. Calibration: Within four hours prior to monitoring, the CGD or OVA shall be suitably calibrated in a manner and with the gas specified by the manufacturer for 20 percent LEL response, or calibrated with methane for a 10,000 ppm response.

b. Probe Distance: The probe inlet shall be one inch (2.5 cm) or less from the potential leak source when searching for leaks. The probe inlet shall be one inch (2.5 cm) from the leak source when the highest detector reading is being determined for a discovered leak. When the probe is obstructed from moving within one inch (2.5 cm) of an actual or potential leak source, the closest practicable probe distance greater than 1 inch shall be used.

c. Probe Movement: The probe shall be moved slowly, not faster than 1.6 inches per second (4 centimeters per second). If there is any meter deflection at a potential or actual leak source, the probe shall be positioned to locate the point of highest meter response.

d. Probe Position: The probe inlet shall be positioned in the path of the vapor flow from a leak, such that the central axis of the probe-tube inlet shall be positioned coaxially with the path of the most concentrated vapors.

e. Data Recording: The highest detector reading and location for each incidence of detected leakage shall be recorded, along with the date and time. If no gasoline vapor is detected, that fact shall be entered into the record.

504.4 CARB Certification and Test Procedures for Gasoline Vapor Recovery Systems:

a. CARB Test Method CP-201, "Certification Procedure for Vapor Recovery Systems of Dispensing Facilities".

b. CARB Test Procedure TP-201.1 - "Determination of Efficiency of Phase I Vapor Recovery Systems of Dispensing Facilities without Assist Processors".

c. CARB Test Procedure TP-201.1A - "Determination of Efficiency of Phase I Vapor Recovery Systems of Dispensing Facilities with Assist Processors".

REGULATION III – CONTROL OF AIR CONTAMINANTS

RULE 358
POLYSTYRENE FOAM OPERATIONS

INDEX

SECTION 100 – GENERAL

101 PURPOSE

102 APPLICABILITY

SECTION 200 – DEFINITIONS

201 BEAD-LOT AND BEAD-LOT IDENTIFIER

202 BLOCK (EPS FOAM BLOCK)

203 BLOWING AGENT

204 CUP MOLDING

205 DAY

206 EMISSION CONTROL SYSTEM (ECS)

207 EPS BEADS (EXPANDABLE POLYSTYRENE BEADS)

208 EPS FOAM (EXPANDED POLYSTYRENE FOAM)

209 LOOSE FILL

210 POLYSTYRENE

211 PREPUFF OR PUFF

212 SHAPE

213 SPECIALTY BLOCK PRODUCTS

214 VOC CONTENT OF RAW EPS

SECTION 300 – STANDARDS

301 BLOCK MAKERS

302 SHAPE MAKERS

303 CUP MAKERS

304 LOOSE FILL MAKERS

305 PERFORMANCE OF ECS CONTROLLING VOC EMISSIONS

306 AIR POLLUTION CONTROL EQUIPMENT AND APPROVED EMISSIONS CONTROL SYSTEM

307 VOC CONTAINMENT, IDENTIFICATION, AND DISPOSAL

308 EXEMPTION

SECTION 400 – ADMINISTRATIVE REQUIREMENTS (NOT APPLICABLE)

SECTION 500 – MONITORING AND RECORDS

501 RECORDS

502 RECORDKEEPING SPECIFICS

503 TEST PROCEDURES

504 TEST METHODS ADOPTED BY REFERENCE

Adopted 04/20/05
Revised 07/25/12
Revised 09/25/13

MARICOPA COUNTY
AIR POLLUTION CONTROL REGULATIONS
REGULATION III – CONTROL OF AIR CONTAMINANTS

RULE 358
POLYSTYRENE FOAM OPERATIONS

SECTION 100 – GENERAL

101 **PURPOSE:** The purpose of this rule is to limit the emissions of volatile organic compounds (VOCs) from the manufacturing of expanded-polystyrene products.

102 **APPLICABILITY:** This rule applies to any facility that expands, ages, or molds expandable polystyrene (EPS).

SECTION 200 – DEFINITIONS: For the purpose of this rule, the following definitions apply, in addition to those definitions found in Rule 100 (General Provisions and Definitions) of these rules. In the event of any inconsistency between any of the Maricopa County air pollution control rules, the definitions in this rule take precedence.

201 **BEAD-LOT AND BEAD-LOT IDENTIFIER:** A specific selection of a specific quantity of expandable polystyrene material, all portions of which typically share similar properties. This selected material has been tested in accordance with standard quality-control procedures and is traceable to the time and date on which it was packaged. Traceability is enabled by a bead lot identifier or lot number, which is a unique numeric (or alphanumeric) string that is permanently coupled with the selected material. The lot number always appears on one or more formal transfer/receipt documents retained by both the seller and the buyer and identifies the material's plant of manufacture, as well as the date that it was packaged.

202 **BLOCK (EPS FOAM BLOCK):** A block-shaped solid made of EPS foam that was molded as a unit. Typically, a block's depth and width each exceed 23 inches (0.6 m) and a length exceeding 95 inches (2.4 m).

203 **BLOWING AGENT:** Any substance that, alone or in conjunction with other substances, is capable of producing a cellular (foam) structure in a polymeric material by inflation.

204 **CUP MOLDING:** The process of making cups, bowls, and similar containers by molding expanded polystyrene globules (prepuff).

205 **DAY:** Any 24-hour period beginning at 12:00 am–midnight.

206 **EMISSION CONTROL SYSTEM (ECS):** A system for reducing emissions of volatile organic compounds, consisting of a capture system (e.g., enclosures, hoods,

and ductwork) and control device(s). An ECS may also include gas conditioning equipment such as condensers or prefilters.

207 **EPS BEADS (EXPANDABLE POLYSTYRENE BEADS):** Polystyrene beads, particles, or granules, usually less than one-twelfth inch in diameter, that are formulated with a blowing agent (typically 3.5% to 7% of bead weight). When subjected to prescribed heating in an expansion system, the beads puff up, expanding many times their original volume into low density foam globules (called "prepuff" or "puff") from which a variety of EPS foam products are molded.

208 **EPS FOAM (EXPANDED POLYSTYRENE FOAM):** A lightweight, naturally white, foam material, made of polystyrene, from which a variety of common items are made, such as ice-chests, insulation board, protective packaging, and single-use cups.

209 **LOOSE FILL:** Small, expanded polystyrene forms produced in a variety of shapes that are used as packing material or as stuffing in furnishings. These foam products typically have a density less than 0.6 pounds per cubic foot (pcf).

210 **POLYSTYRENE:** Any grade, class, or type of thermoplastic polymer, alloy, or blend that is composed of at least 80% polymerized styrene by weight.

211 **PREPUFF OR PUFF:** Expanded polystyrene globules, prior to molding, formed from EPS beads/granules that have been processed in an expander. No grind/regrind material (i.e., expanded EPS that has been through a grinder) or material within a grinding system is considered to be prepuff.

212 **SHAPE:** An object made out of EPS that has been molded into a shape other than that of a block, cup, or bowl.

213 **SPECIALTY BLOCK PRODUCTS:** For the purposes of this rule, a specialty block product is an EPS block or block-derivative (e.g., board, architectural form, etc.) that meets either of the following criteria:

213.1 Has a density of 2.0 pounds per cubic foot or greater, as determined by ASTM Method C303; or

213.2 Has a density less than 0.8 pounds per cubic foot, as determined by ASTM Method C303.

214 **VOC CONTENT OF RAW EPS:** For the purposes of this rule, there are 3 different expressions for stating the VOC content of raw EPS beads/granules. Each of these expressions must be made in terms of either the number of pounds of VOC per 100 pounds of beads or the percentage of overall weight (including the VOC weight) that the incorporated VOC constitutes. The percent value shall be expressed with a precision of no less than the nearest tenth of one percent, which is equivalent to expressing the same number value in pounds VOC per 100 lbs. beads, to the nearest tenth of a pound. The acceptable expressions are:

214.1 **Manufacturer Certified Bead Lot (MCBL) VOC Content:** A document such as a standard Certificate of Analysis that numerically presents an EPS bead-lot's VOC content and must contain all of the following elements:

a. The VOC content printed or written on a paper document by the bead manufacturer, after the manufacturer has had the bead-lot tested to determine the lot's percent VOC, before shipping from the manufacturer; and

b. The manufacturer's name and the bead-lot, identified on the paper document with the appropriate bead-lot identifier; and

c. The signature of an officer of the manufacturing facility or the signature of an officer's designee, previously designated in writing by such an officer.

214.2 **Post-Manufacture Laboratory-Tested (PMLT) VOC Content:** The results of a laboratory test determining the VOC content of a representative sampling of an intermediate or finished expanded polystyrene product, or such a test of raw beads any time after their MCBL VOC content has been assigned.

214.3 **ISO-Certified Maximum Bead-Model (IMBM) VOC Content:** A numerical value that represents the upper limit of a particular bead model's VOC content, which has been:

a. Initially stipulated by the bead-model's manufacturer in a document that gives the bead-model's unique identifier, and

b. Subsequently certified for accuracy by the International Standards Organization (ISO).

SECTION 300 – STANDARDS:

301 **BLOCK MAKERS:** An owner and/or operator of an EPS block-making facility shall comply with Section 301.1 and, if applicable, Section 301.2 of this rule.

301.1 Limit the sum of both the VOC that escaped to atmosphere and the residual VOC in the resulting blocks at the time they are released from the molding machine to not more than 3.0 pounds for every 100 pounds of raw beads processed.

301.2 Specialty Products Alternative Operating Scenario: When producing specialty block-products solely from raw EPS beads that exceed a VOC content of 5.5 percent by weight, an owner and/or operator may choose the standard in Section 301.2(a) by which to comply with this rule, but only if the requirements in Sections 301.2(b) and 301.2(c) are met.

a. Limit the sum of both the VOC that escaped to atmosphere and the residual VOC in the resulting blocks at the time they are released from the molding machine to not more than 3.9 pounds for every 100pounds of raw beads processed (3.9 lb/100 lbs), and

b. Taking into account the total weight of all beads processed every 12months; limit the portion of that weight that is processed under the 3.9 lb/100 lb standard to 5 percent allowed per a 12-month rolling total.

c. The proportion of annual raw-material throughput that is produced under the Section 301.2(a) standard shall be calculated and recorded according to Section 502.1(d).

302 **SHAPE MAKERS:** An owner and/or operator of an EPS shape-making facility shall limit the sum of the VOC that escaped to atmosphere and the residual VOC in the resulting shapes to 2.7 pounds for every 100 pounds of raw beads processed.

303 **CUP MAKERS:** An owner and/or operator of an EPS cup-making facility shall limit the sum of the VOC that escaped to atmosphere and the residual VOC in the resulting cups to 3.2 pounds for every 100 pounds of raw beads processed.

304 **LOOSE FILL MAKERS:** An owner and/or operator of a facility that makes expanded polystyrene loose fill shall limit the sum of both the VOC that escaped to atmosphere plus the residual VOC in the finished loose fill (measured right after the final curing process) to not more than 2.4 pounds for every 100 pounds of raw EPS materials processed into finished loose fill.

305 **PERFORMANCE OF ECS CONTROLLING VOC EMISSIONS:** If an ECS is required by this rule, comply with Sections 305.1, 305.2, and 305.3 of this rule.

305.1 The control device (abatement subsystem) of such ECS shall comply with either Section 305.1(a) or Section 305.1(b) of this rule.

a. Reduce the weight of VOC-as-carbon that enters the control device by at least 94%; or

b. Maintain an hourly average outlet concentration of VOC below 20 milligrams per dry standard cubic meter. Express mass loading of VOC as milligrams of non-methane organic carbon.

305.2 Each ECS that is operated in order to comply with this rule shall be equipped with monitoring devices capable of demonstrating that the ECS is operating in a manner that assures compliance with this rule.

305.3 Records shall be kept according to Section 502.3 of this rule.

306 **AIR POLLUTION CONTROL EQUIPMENT AND APPROVED EMISSION CONTROL SYSTEM (ECS):** An owner, operator, or person subject

to this rule must provide, properly install and maintain in calibration, in good working order, and in operation air pollution control equipment required by this rule.

306.1 OPERATION AND MAINTENANCE (O&M) PLAN REQUIREMENTS FOR AN ECS:

a. An owner, operator, or person subject to this rule must submit to the Control Officer for review every O&M Plan(s) for any ECS including any ECS monitoring device that is used under this rule or required under an air pollution control permit.

b. An owner, operator, or person subject to this rule must provide and maintain readily available on-site at all times (an) O&M Plan(s) for any ECS and any ECS monitoring devices that are used under this rule or an air pollution control permit.

c. An owner, operator, or person subject to this rule operating an ECS must install, maintain, and accurately calibrate monitoring devices described in the O&M Plan(s) including, but not limited to, monitoring devices that measure pressure differentials and other operating conditions necessary to determine if control devices are functioning properly.

d. An owner, operator, or person, who is required to have an O&M Plan for any ECS including any ECS monitoring devices must fully comply with all elements of an O&M Plan(s) including, but not limited to, every action, schedule, and condition identified in each O&M Plan.

e. An O&M Plan for any ECS including any ECS monitoring devices must include all of the following information:

(1) ECS equipment manufacturer,

(2) ECS equipment model,

(3) ECS equipment identification number or identifier that owner, operator, or person subject to this rule assigns to such ECS equipment when manufacturer's equipment identification number is unknown,

(4) Information required by Section 502.3 of this rule,

(5) Procedures for collecting and recording required data and other information in a form approved by the Control Officer, which shall include data collected through the O&M Plan and through the monitoring of key system operating parameters; and,

(6) Procedures and schedules for preventive and corrective maintenance performed for the purpose of maintaining the ECS proper operating condition.

f. The owner, operator, or person subject to this rule, who receives a written notice from the Control Officer that the O&M Plan is deficient or inadequate, must make written revisions to the O&M Plan for any ECS including any ECS monitoring devices and must submit such revised O&M Plan to the Control Officer within five working days of receipt of the Control Officer's written notice, unless such time period is extended by the Control Officer, upon written request, for good cause. During the time that such owner, operator, or person subject to this rule is preparing revisions to the O&M Plan, such owner, operator, or person must still comply with all requirements of this rule.

307 VOC CONTAINMENT, IDENTIFICATION, AND DISPOSAL:

307.1 Containment of VOC-Emitting Material:

a. When they are not in use, store all fresh and used non-EPS VOC containing material in closed, leak-free containers that are labeled according to Section 307.4. Such materials include but are not limited to cleaning solvents, inks, coatings, thinners, and their residues including residues on rags; and

b. Store raw EPS beads in closed, leak-free, labeled containers when not in use.

307.2 Materials addressed in Section 307.1 of this rule may be placed in an enclosure ducted solely to an ECS that is approved by the Control Officer, instead of in closed containers.

307.3 The owner and/or operator must implement procedures to minimize spills of VOC-containing materials described in Section 307.1(a) of this rule, during their handling and transfer to or from containers, vats, enclosed systems, waste receptacles, and other equipment, whether the material is fresh, used, or waste.

307.4 Identification and Labeling:

a. Containers used for initial, intermediate, or final storage of VOC containing materials addressed in Section 307.1 of this rule shall be clearly labeled with their contents.

b. Content-labeling done according to the requirements of federal hazardous waste (RCRA) or occupational safety (OSHA) statutes and codes meets the requirements in Section 307.4(a) of this rule.

308 EXEMPTION:

308.1 Exemption from Section 301.1 through Section 306.1: An owner and/or operator of a facility is exempt from the requirements of Section 301.1 through Section 306.1 of this rule, if the total VOC content of all raw EPS material processed by the facility is, in each calendar year, below 50 tons (100,000 lbs) and, in each calendar month, below 12,000 pounds.

308.2 Burden of Proof: A person claiming any exemption from this rule or from a provision of this rule shall provide adequate records to verify and maintain any exemption. These may include records of raw material used, laboratory analyses, technical data sheets, and/or performance test results.

SECTION 400 – ADMINISTRATIVE REQUIREMENTS (NOT APPLICABLE)

SECTION 500 – MONITORING AND RECORDS

501 RECORDS:

501.1 General: Records shall be kept complete, up-to-date, and in a consistent and legible format.

501.2 Retention: Records required by this rule shall be retained for at least 5 years.

501.3 Use of other Records: Records that are kept by an EPS facility for other agencies or purposes may be submitted to the Control Officer to meet the record requirements of this rule, provided such records contain the necessary information according to Section 502 of this rule.

502 RECORDKEEPING SPECIFICS:

502.1 Tracking EPS Beads: A person subject to this rule shall comply with the following requirements, as applicable.

a. **Lot ID and VOC Content:** Prior to expanding any part of a bead-lot, an owner and/or operator shall obtain and retain an original or copy of the VOC-content, as defined in Section 216 of this rule, for each separate lot-number/identifier of beads received.

b. **Total Expanded by Lot and Date:** Each day that raw EPS material is expanded in a facility's expander, an owner and/or operator shall record the amount of each bead-lot expanded and its corresponding lot number/identifier.

c. **Block Makers:** Each day that blocks are made, record the approximate weight of each newly molded block, measured to the nearest 2 pounds.

d. **Specialty Products Subject to Section 301.2(a):** An EPS-block facility owner and/or operator making specialty products under Section 301.2(a) of this rule shall:

(1) Maintain a log indicating when the facility is operating under the specialty-products alternative operating scenario; and

(2) Each month calculate the percent of total EPS raw material used during the previous 12 months that specialty products, made under Section 301.2(a) of this rule, constitute; enter the calculations and results in the log.

502.2 Lists of Non-EPS VOC-Containing Materials: Non-EPS materials may include, but are not limited to, the following categories: inks, coatings, adhesives, reducers, thinners, solvents, cleaning materials, additives, spray-cans, sprayed lubricants, and any other VOC-containing materials that are not EPS.

a. An owner and/or operator shall maintain a current list of non-EPS materials, containing VOC, used at the facility. A complete and ordered assemblage of the required data meets the requirements for a list.

b. An owner and/or operator shall express VOC content of non-EPS material in one of the following three forms:

(1) Pounds VOC per gallon (or grams VOC per liter), or

(2) Fractional pounds of VOC per lb. material (or grams per kilogram), or

(3) The percent VOC by weight along with the specific gravity or density (two numbers are required for each entry).

c. By the end of the following month, an owner and/or operator shall record the amount and type of each non-EPS material, containing VOC that was used during each month.

502.3 Records of ECS Operation and Monitoring: On a daily basis, the owner and/or operator of a facility that operates an ECS to comply with this rule shall record key system operating parameters documented in the O&M plan, such as temperature, flow rate, pressure, and/or VOC-concentration, etc.

503 TEST PROCEDURES: An owner and/or operator of an EPS facility will be in violation of this rule if the VOC emissions, measured by any of the referenced test methods specified in Section 503 of this rule and listed in Section 504 of this rule, do not comply with the applicable standards included in Section 301 through Section 305 of this rule.

503.1 An owner and/or operator shall conduct a performance test on each ECS used to meet a standard in this rule at least once every five years.

503.2 Performance tests shall be conducted between June 1 and August 31.

503.3 An owner and/or operator shall conduct performance tests using the test methods designated by Section 503.4 through Section 503.9 of this rule and incorporated by reference in Section 504 of this rule.

503.4 An owner and/or operator shall perform the measurement of airflow and gas flow into and out of the ECS by performing EPA Method 2, referenced in Section 504.1 of this rule.

503.5 An owner and/or operator shall determine the concentration of methane and ethane emissions by performing EPA Method 18, referenced in Section 504.1 of this rule or Method 25 (and its submethods) referenced in Section 504.1 of this rule.

503.6 An owner and/or operator shall determine the control efficiency of the VOC control device (abatement subsystem) of an ECS by performing EPA Method 25 (and its submethods), referenced in Section 504.1 of this rule.

503.7 An owner and/or operator shall determine the efficiency of a capture system according to both EPA Method 204 (and its submethods) referenced in Section 504.2 of this rule and the EPA guidance document referenced in Section 504.3 of this rule.

503.8 An owner and/or operator shall determine the concentration of total volatile organic carbon content in polymeric materials by performing Bay Area Air Quality Management District (BAAQMD) Method 45 as referenced in Section 504.5 of this rule or by performing South Coast Air Quality Management District (SCAQMD) Method 306-91, 1993 revision, as referenced in Section 504.6 of this rule.

503.9 **Determination of ECS Effectiveness:** ECS effectiveness shall be determined from the results of a testing protocol based on mass balance, calculated according to the following formulas:

$$\%\,Capture = \frac{VOC_{ECS}}{VOC_I - VOC_P} \times 100$$

$$\%\,Control = \frac{VOC_{ECS} - VOC_{St}}{VOC_{ECS}} \times 100$$

$$\%\,Emitted = \frac{VOC_I + VOC_{St} - VOC_P - VOC_{ECS}}{VOC_I - VOC_P} \times 100$$

$$\% \, Overall \, (Capture + Control)$$

$$= \frac{VOC_{ECS}}{VOC_I - VOC_P} \times \frac{VOC_{ECS} - VOC_{St}}{VOC_{ECS}} \times 100$$

Where:

VOC_I	=	the VOC input in the form of the VOC content of a weighed mass of raw beads
VOC_P	=	the VOC content of the products made from the weighed raw beads
VOC_{ECS}	=	the VOC measured in the air entering the ECS
VOC_{St}	=	the VOC remaining in the gas stream(s) emerging from the ECS during production

503.10 Determination of Product Density: The ASTM Method C303-10 referenced in Section 504.4 of this rule shall be used to determine the density of EPS foam blocks and block-derivatives.

503.11 Conforming Testing to Desired Production Characteristics: The owner and/or operator of an EPS facility must, through performance testing, demonstrate compliance with each alternative operating scenario chosen.

504 COMPLIANCE DETERMINATION – TEST METHODS: An exceedance of the limits established in this rule determined by any of the applicable test methods constitutes a violation of this rule. The EPA test methods, ASTM International (ASTM) standards and other documents as they exist in the Code of Federal Regulations (CFR) as listed below, are adopted and incorporated by reference in Appendix G of the Maricopa County Air Pollution Control Regulations. These documents are available at the Maricopa County Air Quality Department, 1001 N. Central Ave., Phoenix, AZ 85004. ASTM standards are also available from ASTM International, 100 Barr Harbor Drive, P.O. Box C700, West Conshohocken, PA 19428, or from its website at www.astm.org. Bay Area Air Quality Management District test methods are available from Bay Area Air Quality Management District, 939 Ellis Street, San Francisco, CA 94109, or from its website at www.baaqmd.gov. South Coast Air Quality Management test methods are available from South Coast Air Quality Management, 21865 Copley Drive, Diamond Bar, CA 91765, or from its website at: www.aqmd.gov.

504.1 EPA Test Methods as incorporated by reference in 40 CFR 60, Appendix A-7:

a. Method 2: Determination of Stack Gas Velocity and Volumetric Flow Rate (Type S Pitot Tube).

b. Method 2A: Direct Measurement of Gas Volume through Pipes and Small Ducts.

c. Method 2C: Determination of Gas Velocity and Volumetric Flow Rate in Small Stacks or Ducts (Standard Pitot Tube).

d. Method 2D: Measurement of Gas Volume Flow Rates in Small Pipes and Ducts.

e. Method 18: Measurement of Gaseous Organic Compound Emissions by Gas Chromatography.

f. Method 25: Determination of Total Gaseous Nonmethane Organic Emissions as Carbon.

g. Method 25A: Determination of Total Gaseous Nonmethane Organic Concentration Using a Flame Ionization Analyzer.

504.2 EPA Test Methods as Incorporated by Reference in 40 CFR 51, Appendix M:

a. Method 204: Criteria for and Verification of a Permanent or Temporary Total Enclosure.

b. Method 204a: Volatile Organic Compounds Content In Liquid Input Stream.

c. Method 204b: Volatile Organic Compounds Emissions In Captured Stream.

d. Method 204c: Volatile Organic Compounds Emissions In Captured Stream (Dilution Technique).

e. Method 204d: Volatile Organic Compounds Emissions In Uncaptured Stream From Temporary Total Enclosure.

f. Method 204e: Volatile Organic Compounds Emissions In Uncaptured Stream From Building Enclosure.

g. Method 204f: Volatile Organic Compounds Content In Liquid Input Stream (Distillation Approach).

504.3 EPA Guidance document *Guidelines for Determining Capture Efficiency,* January 9, 1995.

504.4 ASTM C303–10 Standard Test Method for Dimensions and Density of Preformed Block and Board-Type Thermal Insulation.

504.5 Bay Area Air Quality Management District Method 45 *Determination of Butanes and Pentanes in Polymeric Materials,* as amended May 18, 2005.

504.6 South Coast Air Quality Management District Method 306-91 *Analysis of Pentanes in Expandable Styrene Polymers,* as revised February 1993.

REGULATION III – CONTROL OF AIR CONTAMINANTS

RULE 360
NEW SOURCE PERFORMANCE STANDARDS

INDEX

SECTION 100 – GENERAL

101 PURPOSE

102 APPLICABILITY

103 AVAILABILITY OF INFORMATION

104 FEDERAL DELEGATION AUTHORITY

SECTION 200 – DEFINITIONS

201 ADMINISTRATOR

202 AFFECTED FACILITY

203 COMMENCED

204 CONSTRUCTION

205 MODIFICATION

206 OWNER OR OPERATOR

207 STANDARD

208 STATIONARY SOURCE

SECTION 300 – STANDARDS

301 ADOPTED FEDERAL STANDARDS

302 ADDITIONAL REQUIREMENTS

SECTION 400 – ADMINISTRATIVE REQUIREMENTS (NOT APPLICABLE)

SECTION 500 – MONITORING AND RECORDS (NOT APPLICABLE)

Revised 07/13/88; Revised 04/06/92; Revised 11/20/96; Revised 05/14/97; Revised 08/19/98; Revised 04/07/99; Revised 03/01/00; Revised 03/07/01; Revised 11/19/03; Revised 03/15/06; Revised 12/17/08; Revised 09/16/09; Revised 07/07/10; Revised 08/17/11; Revised 07/25/12; and **Revised March 26, 2014.**

MARICOPA COUNTY
AIR POLLUTION CONTROL REGULATIONS
REGULATION III – CONTROL OF AIR CONTAMINANTS

RULE 360
NEW SOURCE PERFORMANCE STANDARDS

SECTION 100 – GENERAL

101 **PURPOSE:** To establish acceptable design and performance criteria for specified new or modified emission sources.

102 **APPLICABILITY:** The provisions of this rule apply to the owner or operator of any stationary source which contains an affected facility on which the construction, reconstruction, or a modification is commenced after the date of publication of any standard applicable to such facility in 40 CFR 60 and for which federal delegation of the implementation and enforcement of the standards to the Maricopa County Air Quality Department (department) has been accomplished. Any such stationary source must also comply with other Maricopa County Air Pollution Control Regulations.

103 **AVAILABILITY OF INFORMATION:** Copies of all 40 CFR, Part 60 revisions currently enforced by the department are available electronically at: ecfr.gpoaccess.gov; at the Maricopa County Air Quality Department, 1001 N. Central Ave., Suite 125, Phoenix, AZ, 85004; or by calling (602) 506-6010 for information. ASTM standards are available from ASTM International, 100 Barr Harbor Drive, P.O. Box C700, West Conshohocken, PA 19428, or from its website at www.astm.org.

104 **FEDERAL DELEGATION AUTHORITY:** The department shall enforce the federal new source performance standards (NSPS) (40 CFR Part 60) listed in Section 300 of this rule which have been delegated to the County by the United States Environmental Protection Agency (EPA) for such enforcement. The department may, in addition, enforce such other NSPS as delegated for such enforcement by the EPA to the County.

SECTION 200 – DEFINITIONS: For the purpose of this rule, the following definitions shall apply, in addition to those definitions found in Rule 100 (General Provisions and Definitions) of these rules. In the event of any inconsistency between any of the Maricopa County air pollution control rules, the definitions in this rule take precedence.

201 **ADMINISTRATOR –** As used in Part 60, Title 40, Code of Federal Regulations, shall mean the Control Officer, except that the Control Officer shall not be empowered to approve alternate or equivalent test methods or alternative standards/work practices, or other nondelegable authorities such as those listed in 40 CFR 60.4(d), except as specifically provided in each subpart.

202 **AFFECTED FACILITY –** With reference to a stationary source, any apparatus to which a standard is applicable.

203 **COMMENCED –** With respect to the definition of "new source" in Section 111(a)(2) of the Act, that an owner or operator has undertaken a continuous program of construction, reconstruction, or modification or that an owner or operator has entered into a contracted obligation to undertake and complete, within a reasonable time, a continuous program of construction, reconstruction or modification.

204 **CONSTRUCTION –** The fabrication, erection, or installation of an affected facility.

205 **MODIFICATION –** Any physical change in, or change in the method of operation of, an existing facility which increases the amount of any contaminant (to which a standard applies) emitted into the atmosphere by that facility or which results in the emission of any air contaminant (to which a standard applies) into the atmosphere not previously emitted.

206 **OWNER OR OPERATOR –** Any person who owns, leases, operates, controls, or supervises an affected facility or a stationary source of which an affected facility is a part.

207 **STANDARD –** A standard of performance promulgated under this rule.

208 **STATIONARY SOURCE –** Any building, structure, facility, or installation which emits or may emit any air pollutant.

SECTION 300 – STANDARDS

301 **ADOPTED FEDERAL STANDARDS:** The federal standards of performance for those subparts of 40 CFR 60 adopted as of July 1, 2013, as listed below, and all accompanying appendices are adopted and incorporated by reference, in the Maricopa County Air Pollution Control Regulations as indicated. This incorporation by reference includes no future editions or amendments. Each owner or operator subject to the requirements of the following subparts shall comply with the requirements of those subparts and the additional requirements set forth herein. Incorporation by reference does not include nondelegable functions of the EPA Administrator.

301.1 **Subpart A—**General Provisions; exclude any sections dealing with equivalency determinations or innovative technology waivers, as covered in Sections 111(h)(3) and 111(j) respectively of the Clean Air Act.

301.2 **Subpart D—**Standards of Performance for Fossil-Fuel-Fired Steam Generators for which Construction is Commenced after August 17, 1971.

301.3 **Subpart Da—**Standards of Performance for Electric Utility Steam Generating Units for which Construction is Commenced after September 18, 1978.

301.4 **Subpart Db—**Standards of Performance for Industrial-Commercial-Institutional Steam Generating Units.

301.5 **Subpart Dc—**Standards of Performance for Small Industrial-Commercial-Institutional Steam Generating Units.

301.6 **Subpart E—**Standards of Performance for Incinerators.

301.7 **Subpart Ea—**Standards of Performance for Municipal Waste Combustors for which Construction is Commenced after December 20, 1989 and on or before September 20, 1994.

301.8 **Subpart Eb—**Standards of Performance for Large Municipal Waste Combustors for which Construction is Commenced after September 20, 1994 or for which Modification or Reconstruction is Commenced after June 19, 1996.

301.9 **Subpart Ec—**Standards of Performance for Hospital/Medical/Infectious Waste Incinerators for which Construction is Commenced after June 20, 1996.

301.10 **Subpart F—**Standards of Performance for Portland Cement Plants.

301.11 **Subpart G—**Standards of Performance for Nitric Acid Plants.

301.12 **Subpart Ga**—Standards of Performance for Nitric Acid Plants for Which Construction, Reconstruction, or Modification Commenced After October 14, 2011.

301.13 **Subpart H—**Standards of Performance for Sulfuric Acid Plants.

301.14 **Subpart I—**Standards of Performance for Hot Mix Asphalt Facilities.

301.15 **Subpart J—**Standards of Performance for Petroleum Refineries.

301.16 **Subpart Ja—**Standards of Performance for Petroleum Refineries for which Construction, Reconstruction, or Modification Commenced after May 14, 2007.

301.17 **Subpart K—**Standards of Performance for Storage Vessels for Petroleum Liquids for which Construction, Reconstruction, or Modification Commenced after June 11, 1973, and prior to May 19, 1978.

301.18 **Subpart Ka—**Standards of Performance for Storage Vessels for Petroleum Liquids for which Construction, Reconstruction, or Modification Commenced after May 18, 1978, and prior to July 23, 1984.

301.19 **Subpart Kb—**Standards of Performance for Volatile Organic Liquid Storage Vessels (Including Petroleum Liquid Storage Vessels) for which Construction, Reconstruction, or Modification Commenced after July 23, 1984.

301.20 **Subpart L—**Standards of Performance for Secondary Lead Smelters.

301.21 **Subpart M—**Standards of Performance for Secondary Brass and Bronze Production Plants.

301.22 **Subpart N—**Standards of Performance for Primary Emissions from Basic Oxygen Process Furnaces for which Construction Commenced after June 11, 1973.

301.23 **Subpart Na—**Standards of Performance for Secondary Emissions from Basic Oxygen Process Steelmaking Facilities for which Construction Commenced after January 20, 1983.

301.24 **Subpart O—**Standards of Performance for Sewage Treatment Plants.

301.25 **Subpart P—**Standards of Performance for Primary Copper Smelters.

301.26 **Subpart Q—**Standards of Performance for Primary Zinc Smelters.

301.27 **Subpart R—**Standards of Performance for Primary Lead Smelters.

301.28 **Subpart S—**Standards of Performance for Primary Aluminum Reduction Plants.

301.29 **Subpart T—**Standards of Performance for the Phosphate Fertilizer Industry: Wet-Process Phosphoric Acid Plants.

301.30 **Subpart U—**Standards of Performance for the Phosphate Fertilizer Industry: Superphosphoric Acid Plants.

301.31 **Subpart V—**Standards of Performance for the Phosphate Fertilizer Industry: Diammonium Phosphate Plants.

301.32 **Subpart W—**Standards of Performance for the Phosphate Fertilizer Industry: Triple Superphosphate Plants.

301.33 **Subpart X—**Standards of Performance for the Phosphate Fertilizer Industry: Granular Triple Superphosphate Storage Facilities.

301.34 **Subpart Y—**Standards of Performance for Coal Preparation and Processing Plants.

301.35 **Subpart Z—**Standards of Performance for Ferroalloy Production Facilities.

301.36 **Subpart AA—**Standards of Performance for Steel Plants: Electric Arc Furnaces Constructed after October 21, 1974, and on or before August 17, 1983.

301.37 **Subpart AAa—**Standards of Performance for Steel Plants: Electric Arc Furnaces and Argon-Oxygen Decarburization Vessels Constructed after August 17, 1983.

301.38 **Subpart BB—**Standards of Performance for Kraft Pulp Mills.

301.39 **Subpart CC—**Standards of Performance for Glass Manufacturing Plants.

301.40 **Subpart DD—**Standards of Performance for Grain Elevators.

301.41 **Subpart EE—**Standards of Performance for Surface Coating of Metal Furniture.

301.42 **Subpart GG—**Standards of Performance for Stationary Gas Turbines.

301.43 **Subpart HH—**Standards of Performance for Lime Manufacturing Plants.

301.44 **Subpart KK—**Standards of Performance for Lead-Acid Battery Manufacturing Plants.

301.45 **Subpart LL—**Standards of Performance for Metallic Mineral Processing Plants.

301.46 **Subpart MM—**Standards of Performance for Automobile and Light Duty Truck Surface Coating Operations.

301.47 **Subpart NN—**Standards of Performance for Phosphate Rock Plants.

301.48 **Subpart PP—**Standards of Performance for Ammonium Sulfate Manufacture.

301.49 **Subpart QQ—**Standards of Performance for the Graphic Arts Industry: Publication Rotogravure Printing.

301.50 **Subpart RR—**Standards of Performance for Pressure Sensitive Tape and Label Surface Coating Operations.

301.51 **Subpart SS—**Standards of Performance for Industrial Surface Coating: Large Appliances.

301.52 **Subpart TT—**Standards of Performance for Metal Coil Surface Coating.

301.53 **Subpart UU—**Standards of Performance for Asphalt Processing and Asphalt Roofing Manufacture.

301.54 **Subpart VV—**Standards of Performance for Equipment Leaks of VOC in the Synthetic Organic Chemicals Manufacturing Industry for which Construction, Reconstruction, or Modification Commenced after January 5, 1981, and on or before November 7, 2006.

301.55 **Subpart VVa**—Standards of Performance for Equipment Leaks of VOC in the Synthetic Organic Chemicals Manufacturing Industry for which Construction, Reconstruction, or Modification Commenced after November 7, 2006.

301.56 **Subpart WW—**Standards of Performance for the Beverage Can Surface Coating Industry.

301.57 **Subpart XX—**Standards of Performance for Bulk Gasoline Terminals.

301.58 **Subpart AAA—**Standards of Performance for New Residential Wood Heaters.

301.59 **Subpart BBB—**Standards of Performance for the Rubber Tire Manufacturing Industry.

301.60 **Subpart DDD—**Standards of Performance for Volatile Organic Compound (VOC) Emissions from the Polymer Manufacturing Industry.

301.61 **Subpart FFF—**Standards of Performance for Flexible Vinyl and Urethane Coating and Printing.

301.62 **Subpart GGG—**Standards of Performance for Equipment Leaks of VOC in Petroleum Refineries for which Construction, Reconstruction, or Modification Commenced after January 4, 1983, and on or before November 7, 2006.

301.63 **Subpart GGGa—**Standards of Performance for Equipment Leaks of VOC in Petroleum Refineries for which Construction, Reconstruction, or Modification Commenced after November 7, 2006.

301.64 **Subpart HHH—**Standards of Performance for Synthetic Fiber Production Facilities.

301.65 **Subpart III—**Standards of Performance for Volatile Organic Compound (VOC) Emissions from the Synthetic Organic Chemical Manufacturing Industry (SOCMI) Air Oxidation Unit Processes.

301.66 **Subpart JJJ—**Standards of Performance for Petroleum Dry Cleaners.

301.67 **Subpart KKK—**Standards of Performance for Equipment Leaks of VOC from Onshore Natural Gas Processing Plants.

301.68 **Subpart LLL—**Standards of Performance for Onshore Natural Gas Processing: SO_2 Emissions.

301.69 **Subpart NNN—**Standards of Performance for Volatile Organic Compound (VOC) Emissions from Synthetic Organic Chemical Manufacturing Industry (SOCMI) Distillation Operations.

301.70 **Subpart OOO—**Standards of Performance for Nonmetallic Mineral Processing Plants.

301.71 **Subpart PPP—**Standard of Performance for Wool Fiberglass Insulation Manufacturing Plants.

301.72 **Subpart QQQ—**Standards of Performance for VOC Emissions from Petroleum Refinery Wastewater Systems.

301.73 **Subpart RRR—**Standards of Performance for Volatile Organic Compound (VOC) Emissions from Synthetic Organic Chemical Manufacturing Industry (SOCMI) Reactor Processes.

301.74 **Subpart SSS—**Standards of Performance for Magnetic Tape Coating Facilities.

301.75 **Subpart TTT—**Standards of Performance for Industrial Surface Coating: Surface Coating of Plastic Parts for Business Machines.

301.76 **Subpart UUU—**Standards of Performance for Calciners and Dryers in Mineral Industries.

301.77 **Subpart VVV—**Standards of Performance for Polymeric Coating of Supporting Substrates Facilities.

301.78 **Subpart WWW—**Standards of Performance for Municipal Solid Waste Landfills.

301.79 **Subpart AAAA—**Standards of Performance for Small Municipal Waste Combustion Units for which Construction is Commenced after August 30, 1999 or for which Modification or Reconstruction is Commenced after June 6, 2001.

301.80 **Subpart CCCC—**Standards of Performance for Commercial and Industrial Solid Waste Incineration Units for which Construction is Commenced after November 30, 1999 or for which Modification or Reconstruction is Commenced on or after June 1, 2001.

301.81 **Subpart EEEE—**Standards of Performance for Other Solid Waste Incineration Units for which Construction is Commenced after December 9, 2004, or for which Modification or Reconstruction is Commenced on or after June 16, 2006.

301.82 **Subpart IIII**—Standards of Performance for Stationary Compression Ignition Internal Combustion Engines.

301.83 **Subpart JJJJ**—Standards of Performance for Stationary Spark Ignition Internal Combustion Engines.

301.84 **Subpart KKKK**—Standards of Performance for Stationary Combustion Turbines.

301.85 **Subpart LLLL**—Standards of Performance for New Sewage Sludge Incineration Units.

301.86 **Subpart OOOO**—Standards for Crude Oil and Natural Gas Production, Transmission and Distribution.

302 **ADDITIONAL REQUIREMENTS:** From the general standards identified in Section 301 of this rule, delete 40 CFR 60.4, 60.5, and 60.6. All requests, reports, applications, submittals, and other communications to the Control Officer pursuant to this rule shall be submitted to the Maricopa County Air Quality Department, 1001 N. Central Ave., Suite 125, Phoenix, AZ, 85004.

SECTION 400 – ADMINISTRATIVE REQUIREMENTS (NOT APPLICABLE)

SECTION 500 – MONITORING AND RECORDS (NOT APPLICABLE)

REGULATION III – CONTROL OF AIR CONTAMINANTS

RULE 370
FEDERAL HAZARDOUS AIR POLLUTANT PROGRAM

INDEX

SECTION 100 – GENERAL

101 PURPOSE

102 APPLICABILITY

103 AVAILABILITY OF INFORMATION

104 FEDERAL DELEGATION AUTHORITY

SECTION 200 – DEFINITIONS

201 ADMINISTRATOR

202 AMENDED WATER

203 EXISTING SOURCE

204 FEDERALLY LISTED HAZARDOUS AIR POLLUTANT

205 GOVERNMENT-ISSUED PHOTO IDENTIFICATION CARD

206 HAZARDOUS AIR POLLUTANT

207 MAJOR SOURCE

208 MODIFICATION

209 NESHAP

210 NEW SOURCE

211 STATIONARY SOURCE

SECTION 300 – STANDARDS

301 STANDARDS OF PERFORMANCE FOR FEDERALLY LISTED HAZARDOUS AIR POLLUTANTS

302 STANDARDS OF PERFORMANCE FOR FEDERALLY LISTED HAZARDOUS AIR POLLUTANTS FOR SOURCE CATEGORIES

303 ADDITIONAL REQUIREMENTS

SECTION 400 – ADMINISTRATIVE REQUIREMENTS

401 CONTROL TECHNOLOGY DETERMINATIONS FOR MAJOR SOURCES IN ACCORDANCE WITH CLEAN AIR ACT SECTIONS, SECTIONS 112(g) AND 112(j)

402 COMPLIANCE EXTENSIONS FOR EARLY REDUCTION OF FEDERALLY LISTED HAZARDOUS AIR POLLUTANTS

SECTION 500 – MONITORING AND RECORDS (NOT APPLICABLE)

Revised 07/13/88; Revised 04/06/92; Repealed and Adopted 11/15/93; Revised 11/20/96; Revised 05/14/97; Revised 05/20/98; Revised 08/19/98; Revised 03/01/00; Revised 03/07/01; Revised 11/19/03; Revised 03/15/06; Revised 12/17/08; Revised 09/16/09; Revised 07/07/10; Revised 08/17/11; Revised 07/25/12; and **Revised March 26, 2014.**

MARICOPA COUNTY
AIR POLLUTION CONTROL REGULATIONS
REGULATION III – CONTROL OF AIR CONTAMINANTS

RULE 370
FEDERAL HAZARDOUS AIR POLLUTANT PROGRAM

SECTION 100 – GENERAL

101 **PURPOSE:** To establish emission standards for federally listed hazardous air pollutants.

102 **APPLICABILITY**: The provisions of this rule apply to the owner or operator of any stationary source for which a standard is prescribed under this rule, and for which federal delegation of the implementation and enforcement of the standards to the Maricopa County Air Quality Department (department) has been accomplished. Any such stationary source must also comply with other Maricopa County Air Pollution Control Regulations.

103 **AVAILABILITY OF INFORMATION:** Copies of all 40 CFR, Part 61 and Part 63 revisions currently enforced by the department are available electronically at: ecfr.gpoaccess.gov; at the Maricopa County Air Quality Department, 1001 N. Central Ave., Suite 125, Phoenix, AZ, 85004; or by calling (602) 506-6010 for information. ASTM standards are available from ASTM International, 100 Barr Harbor Drive, P.O. Box C700, West Conshohocken, PA 19428, or from its website at www.astm.org.

104 **FEDERAL DELEGATION AUTHORITY:** The department shall enforce the national emission standards for hazardous air (NESHAPs) (40 CFR 61 and 40 CFR 63) listed in Section 300 of this rule which have been delegated to the County by the United States Environmental Protection Agency (EPA) for such enforcement. The department in addition, may enforce such other NESHAPs as delegated for such enforcement by the EPA to the County.

SECTION 200 – DEFINITIONS: For the purpose of this rule, the following definitions shall apply, in addition to those definitions found in Rule 100 (General Provisions and Definitions) of these rules. In the event of any inconsistency between any of the Maricopa County air pollution control rules, the definitions in this rule take precedence.

201 **ADMINISTRATOR –** As used in Parts 61 and 63, Title 40, Code of Federal Regulations, shall mean the Control Officer, except that the Control Officer shall not be empowered to approve alternate or equivalent test methods, alternative standards/work practices, or other nondelegable authorities, except as specifically provided in each subpart.

202 **AMENDED WATER –** Water to which surfactant (wetting agent) has been added to increase the ability of the liquid to penetrate asbestos-containing material (ACM).

203 **EXISTING SOURCE** – Any stationary source other than a new source.

204 **FEDERALLY LISTED HAZARDOUS AIR POLLUTANT –** Any air pollutant listed pursuant to Section 112(b) of the Act.

205 **GOVERNMENT-ISSUED PHOTO IDENTIFICATION CARD –** Includes, but is not limited to, a valid driver's license, a valid nonoperating identification license, a valid tribal enrollment card or tribal

identification card, or other valid government issued photo identification that includes the name, address, and photograph of the card holder.

206 **HAZARDOUS AIR POLLUTANT –** Any air pollutant regulated under Section 112 of the Act, any air pollutant subject to NESHAP, or any air pollutant designated by the Director as a hazardous air pollutant pursuant to A.R.S. § 49-426.04.

207 **MAJOR SOURCE –** A stationary source or group of stationary sources located within a contiguous area, and under common control, and that emits or has the potential to emit considering controls, in the aggregate, 10 tons per year or more of any federally listed hazardous air pollutant or 25 tons per year or more of any combination of federally listed hazardous air pollutants. A lesser quantity or, in the case of radionuclides, a different criteria may be established by the Administrator pursuant to Section 112 of the Act and may be adopted by the Board of Supervisors by rule.

208 **MODIFICATION –** Any physical change in, or change in the method of operation of a major source which increases the actual emissions of any federally listed hazardous air pollutant emitted by such source by more than a de minimis amount, or which results in the emission of any federally listed hazardous air pollutant, not previously emitted by more than a de minimis amount.

209 **NESHAP –** National emission standards for hazardous air pollutants pursuant to 40 CFR Part 61 and Part 63.

210 **NEW SOURCE –** A stationary source, the construction or reconstruction of which commences after the Administrator first proposes regulations under Section 112 of the Act establishing an emission standard applicable to such source.

211 **STATIONARY SOURCE –** Any building, structure, facility, or installation which emits or may emit any air pollutant.

SECTION 300 – STANDARDS

301 **STANDARDS OF PERFORMANCE FOR FEDERALLY LISTED HAZARDOUS AIR POLLUTANTS:** The federally listed hazardous air pollutants as listed in Table 370.1 of this rule and NESHAPs adopted as of July 1, 2013, as listed below and as which can be found at 40 CFR 61 and all accompanying appendices, are incorporated by reference with the listed exclusions and additions and shall be applied by the Control Officer. This incorporation by reference includes no future editions or amendments. Each owner or operator subject to the requirements of the following subparts shall comply with the requirements of those subparts and the additional requirements set forth herein. Incorporation by reference does not include nondelegable functions of the EPA Administrator.

301.1 **Subpart A—**General Provisions; exclude any sections dealing with equivalency determinations that are nontransferable through Section 112(e)(3) of the Act.

301.2 **Subpart C—**National Emission Standard for Beryllium.

301.3 **Subpart D—**National Emission Standard for Beryllium Rocket Motor Firing.

301.4 **Subpart E—**National Emission Standard for Mercury.

301.5 **Subpart F—**National Emission Standard for Vinyl Chloride.

301.6 **Subpart J—**National Emission Standard for Equipment Leaks (Fugitive Emission Sources) of Benzene.

301.7 **Subpart L—**National Emission Standard for Benzene Emissions from Coke By-Product Recovery Plants.

301.8 **Subpart M—**National Emission Standard for Asbestos.

a. Each owner or operator of a demolition activity or renovation activity involving a facility as defined in 40 CFR 61, Subpart M shall:

(1) Fully comply with all requirements of 40 CFR 61, Subpart M.

(2) Thoroughly inspect the facility within 12 months of commencement of demolition or renovation activity for the presence of asbestos, including Category I and Category II nonfriable ACM. Include the date of this inspection on the written notification.

(3) Provide the Control Officer with written notification of intention to demolish or to renovate in the manner described in 40 CFR 61.145.

(4) Update all notifications in accordance with 40 CFR 61.145(b). For renovations described in 40 CFR 61.145(a)(4)(iii), notifications shall expire every December 31, with new notices required at least 10 working days before the end of the calendar year preceding the year for which notice is being given. All other notifications shall expire one year from either the original postmark date or commercial delivery date or date of hand delivery to the Control Officer. For a demolition activity or renovation activity that continues beyond the expiration date, the owner or operator of the demolition or renovation activity shall notify the Control Officer in accordance with 40 CFR 61.145(b) at least 10 working days prior to the expiration of the original notice and pay all applicable fees prescribed by Rule 280 of these rules.

(5) Pay all applicable fees prescribed by Rule 280 of these rules.

b. In addition, each owner or operator of a demolition activity or renovation activity shall comply with the following requirements:

(1) Certification, training, and record keeping requirements:

(a) All facilities scheduled for demolition or renovation shall be inspected by a currently certified Asbestos Hazard Emergency Response Act (AHERA) accredited asbestos building inspector (herein referenced as inspector), as required by either AHERA or the Asbestos School Hazard Abatement Reauthorization Act (ASHARA).

(b) Each owner and operator of a facility shall maintain a copy of any reports of inspections made for a facility for two years from completion of project, including laboratory test results of samples collected. A copy of the inspection reports and laboratory test results shall be on-site and available for inspection at the facility, upon request of the Department, during all demolition and renovation (asbestos setup, removal, handling, collecting, containerizing, cleanup and dismantling) activities.

(c) All asbestos workers shall maintain current AHERA worker certification. All asbestos contractor/supervisors shall maintain current AHERA/ASHARA contractor/supervisor certification and shall be on-site at all times during any active asbestos abatement work at or above NESHAP threshold amounts. A legible copy of all asbestos workers and contractor/supervisor's current training

certificates from an EPA accredited training provider shall be available for inspection at all times at the demolition or renovation site.

(d) All asbestos workers and contractor/supervisors shall have color photo identification on-site and available for inspection, upon request of the Department, at all times during asbestos setup, removal, handling, collecting, containerizing, cleanup and dismantling. The color photo identification shall be from an EPA accredited training provider verifying the certification requirements in section (b)(1)(c), or a current government-issued photo identification card.

(2) Asbestos renovation and demolition standards:

(a) A facility owner or operator shall not create visible dust emissions when removing or transporting to the disposal site Category I nonfriable asbestos-containing material (ACM) and Category II nonfriable ACM that remain nonfriable Category I ACM and nonfriable Category II ACM.

(b) Inspection viewing devices at facilities are required at all asbestos renovation projects where regulated asbestos-containing material (RACM) is being abated, except for roofing projects involving Category I nonfriable ACM and Category II nonfriable ACM exclusively. Viewing devices shall be so designed as to allow an inspector to view the facility from the outside, either through ports or by video monitoring.

(c) All exposed RACM subject to cutting or dismantling operations and all RACM being removed from a facility or a facility component shall be kept adequately wet by using amended water to control the release of asbestos fibers. The use of amended water will not be required in the case of an ordered demolition, as defined in 40 CFR 61.145(a)(3), where the debris is suspected to contain or is known to contain ACM , however ordered demolitions are subject to 40 CFR 61.145(c)(9). Specific exemptions are listed under 40 CFR 61.145(c)(3)(i)(A), 40 CFR 61.145(c)(3)(ii) and/or 40 CFR 61.145(c)(7)(i). To claim these exemptions, the owner or operator shall follow the requirements of 40 CFR 61.145(c)(3)(i)(B), 40 CFR 61.145(c)(3)(iii) and/or 61.145(c)(7)(ii) and (iii).

(d) All RACM shall be contained in transparent, leak-tight wrapping and shall remain adequately wet to prevent dust emissions during removal, transport, storage, and proper landfill disposal following local, county, state, and federal regulations. Affix a visible and legible label to each individual wrapping with the name of the site owner or operator and the name and address of the location that generated the RACM.

301.9 **Subpart N—**National Emission Standard for Inorganic Arsenic Emissions from Glass Manufacturing Plants.

301.10 **Subpart O—**National Emission Standard for Inorganic Arsenic Emissions from Primary Copper Smelters.

301.11 **Subpart P—**National Emission Standard for Inorganic Arsenic Emissions from Arsenic Trioxide and Metallic Arsenic Production Facilities.

301.12 **Subpart V—**National Emission Standard for Equipment Leaks (Fugitive Emission Sources).

301.13 **Subpart Y—**National Emission Standard for Benzene Emissions from Benzene Storage Vessels.

301.14 **Subpart BB—**National Emission Standard for Benzene Emissions from Benzene Transfer Operations.

301.15 **Subpart FF—**National Emission Standard for Benzene Waste Operations.

302 **STANDARDS OF PERFORMANCE FOR FEDERALLY LISTED HAZARDOUS AIR POLLUTANTS FOR SOURCE CATEGORIES:** The federally listed hazardous air pollutants as listed in Table 370.1 of this rule and NESHAPs adopted as of July 1, 2013, as listed below and as which can be found at 40 CFR 63, and all accompanying appendices, are incorporated by reference, as applicable requirements, with the listed exclusions and additions and shall be applied by the Control Officer. This incorporation by reference includes no future editions or amendments. Each owner or operator subject to the requirements of the following subparts shall comply with the requirements of those subparts and the additional requirements set forth. Incorporation by reference does not include nondelegable functions of the EPA Administrator.

302.1 **Subpart A—**General Provisions.

302.2 **Subpart B—**Requirements for Control Technology Determinations for Major Sources in Accordance with Clean Air Act Sections, Sections 112(g) and 112(j).

302.3 **Subpart C—**List of Hazardous Air Pollutants, Petitions Process, Lesser Quantity Designations, Source Category List.

302.4 **Subpart D—**Regulations Governing Compliance Extensions for Early Reductions of Hazardous Air Pollutants.

302.5 **Subpart F—**National Emission Standards for Organic Hazardous Air Pollutants from the Synthetic Organic Chemical Manufacturing Industry.

302.6 **Subpart G—**National Emission Standards for Organic Hazardous Air Pollutants from the Synthetic Organic Chemical Manufacturing Industry for Process Vents, Storage Vessels, Transfer Operations, and Wastewater.

302.7 **Subpart H—**National Emission Standards for Organic Hazardous Air Pollutants for Equipment Leaks.

302.8 **Subpart I—**National Emission Standards for Organic Hazardous Air Pollutants for Certain Processes Subject to the Negotiated Regulation for Equipment Leaks.

302.9 **Subpart J—**National Emission Standards for Hazardous Air Pollutants for Polyvinyl Chloride and Copolymers Production.

302.10 **Subpart L—**National Emission Standards for Coke Oven Batteries.

302.11 **Subpart M—**National Perchloroethylene Air Emission Standards for Dry Cleaning Facilities.

302.12 **Subpart N—**National Emission Standards for Chromium Emissions from Hard and Decorative Chromium Electroplating and Chromium Anodizing Tanks.

302.13 **Subpart O—**Ethylene Oxide Emissions Standards for Sterilization Facilities.

302.14 **Subpart Q—**National Emission Standards for Hazardous Air Pollutants for Industrial Process Cooling Towers.

302.15 **Subpart R—**National Emission Standards for Gasoline Distribution Facilities (Bulk Gasoline Terminals and Pipeline Breakout Stations).

302.16 **Subpart S—**National Emission Standards for Hazardous Air Pollutants from the Pulp and Paper Industry.

302.17 **Subpart T—**National Emission Standards for Halogenated Solvent Cleaning.

302.18 **Subpart U—**National Emission Standards for Hazardous Air Pollutant Emissions: Group I Polymers and Resins.

302.19 **Subpart W—**National Emission Standards for Hazardous Air Pollutants for Epoxy Resins Production and Non-Nylon Polyamides Production.

302.20 **Subpart X—**National Emission Standards for Hazardous Air Pollutants from Secondary Lead Smelting.

302.21 **Subpart AA—**National Emission Standards for Hazardous Air Pollutants from Phosphoric Acid Manufacturing Plants.

302.22 **Subpart BB—**National Emission Standards for Hazardous Air Pollutants from Phosphate Fertilizers Production Plants.

302.23 **Subpart CC—**National Emission Standards for Hazardous Air Pollutants from Petroleum Refineries.

302.24 **Subpart DD—**National Emission Standards for Hazardous Air Pollutants from Off-Site Waste and Recovery Operations.

302.25 **Subpart EE—**National Emission Standards for Magnetic Tape Manufacturing Operations.

302.26 **Subpart GG—**National Emission Standards for Aerospace Manufacturing and Rework Facilities.

302.27 **Subpart HH—**National Emission Standards for Hazardous Air Pollutants from Oil and Natural Gas Production Facilities.

302.28 **Subpart JJ—**National Emission Standards for Wood Furniture Manufacturing Operations.

302.29 **Subpart KK—**National Emission Standards for the Printing and Publishing Industry.

302.30 **Subpart MM—**National Emission Standards for Hazardous Air Pollutants for Chemical Recovery Combustion Sources at Kraft, Soda, Sulfite, and Stand-Alone Semichemical Pulp Mills.

302.31 **Subpart OO—**National Emission Standards for Tanks – Level 1.

302.32 **Subpart PP—**National Emission Standards for Containers.

302.33 **Subpart QQ**—National Emission Standards for Surface Impoundments.

302.34 **Subpart RR**—National Emission Standards for Individual Drain Systems.

302.35 **Subpart SS—**National Emission Standards for Closed Vent Systems, Control Devices, Recovery Devices and Routing to a Fuel Gas System or a Process.

302.36 **Subpart TT—**National Emission Standards for Equipment Leaks – Control Level 1.

302.37 **Subpart UU—**National Emission Standards for Equipment Leaks – Control Level 2 Standards.

302.38 **Subpart VV—**National Emission Standards for Oil-Water Separators and Organic-Water Separators.

302.39 **Subpart WW—**National Emission Standards for Storage Vessels (Tanks) – Control Level 2.

302.40 **Subpart XX—**National Emission Standards for Ethylene Manufacturing Process Units: Heat Exchange Systems and Waste Operations.

302.41 **Subpart YY—**National Emission Standards for Hazardous Air Pollutants for Source Categories: Generic Maximum Achievable Control Technology Standards.

302.42 **Subpart CCC—**National Emission Standards for Hazardous Air Pollutants for Steel Pickling – HCl Process Facilities and Hydrochloric Acid Regeneration Plants.

302.43 **Subpart DDD—**National Emission Standards for Hazardous Air Pollutants for Mineral Wool Production.

302.44 **Subpart EEE—**National Emission Standards for Hazardous Air Pollutants from Hazardous Waste Combustors.

302.45 **Subpart GGG—**National Emission Standards for Pharmaceuticals Production.

302.46 **Subpart HHH—**National Emission Standards for Hazardous Air Pollutants from Natural Gas Transmission and Storage Facilities.

302.47 **Subpart III—**National Emission Standards for Hazardous Air Pollutants for Flexible Polyurethane Foam Production.

302.48 **Subpart JJJ—**National Emission Standards for Hazardous Air Pollutant Emissions: Group IV Polymers and Resins.

302.49 **Subpart LLL—**National Emission Standards for Hazardous Air Pollutants from the Portland Cement Manufacturing Industry.

302.50 **Subpart MMM—**National Emission Standards for Hazardous Air Pollutants for Pesticide Active Ingredient Production.

302.51 **Subpart NNN—**National Emission Standards for Hazardous Air Pollutants for Wool Fiberglass Manufacturing.

302.52 **Subpart OOO—**National Emission Standards for Hazardous Air Pollutant Emissions: Manufacture of Amino/Phenolic Resins.

302.53 **Subpart PPP—**National Emission Standards for Hazardous Air Pollutant Emissions for Polyether Polyols Production.

302.54 **Subpart QQQ—**National Emission Standards for Hazardous Air Pollutants for Primary Copper Smelting.

302.55 **Subpart RRR—**National Emission Standards for Hazardous Air Pollutants for Secondary Aluminum Production.

302.56 **Subpart TTT—**National Emission Standards for Hazardous Air Pollutants for Primary Lead Smelting.

302.57 **Subpart UUU—**National Emission Standards for Hazardous Air Pollutants for Petroleum Refineries: Catalytic Cracking Units, Catalytic Reforming Units, and Sulfur Recovery Units.

302.58 **Subpart VVV—**National Emission Standards for Hazardous Air Pollutants: Publicly Owned Treatment Works.

302.59 **Subpart XXX—**National Emission Standards for Hazardous Air Pollutants for Ferroalloys Production: Ferromanganese and Silicomanganese.

302.60 **Subpart AAAA—**National Emission Standards for Hazardous Air Pollutants: Municipal Solid Waste Landfills.

302.61 **Subpart CCCC—**National Emission Standards for Hazardous Air Pollutants: Manufacturing of Nutritional Yeast.

302.62 **Subpart DDDD—**National Emission Standards for Hazardous Air Pollutants: Plywood and Composite Wood Products.

302.63 **Subpart EEEE—**National Emission Standards for Hazardous Air Pollutants: Organic Liquids Distribution (Non-Gasoline).

302.64 **Subpart FFFF—**National Emission Standards for Hazardous Air Pollutants: Miscellaneous Organic Chemical Manufacturing.

302.65 **Subpart GGGG—**National Emission Standards for Hazardous Air Pollutants: Solvent Extraction for Vegetable Oil Production.

302.66 **Subpart HHHH—**National Emission Standards for Hazardous Air Pollutants for Wet-Formed Fiberglass Mat Production.

302.67 **Subpart IIII—**National Emission Standards for Hazardous Air Pollutants: Surface Coating of Automobiles and Light-Duty Trucks.

302.68 **Subpart JJJJ—**National Emission Standards for Hazardous Air Pollutants: Paper and Other Web Coating.

302.69 **Subpart KKKK—**National Emission Standards for Hazardous Air Pollutants: Surface Coating of Metal Cans.

306.70 **Subpart MMMM—**National Emission Standards for Hazardous Air Pollutants for Surface Coating of Miscellaneous Metal Parts and Products.

302.71 **Subpart NNNN—**National Emission Standards for Hazardous Air Pollutants: Surface Coating of Large Appliances.

302.72 **Subpart OOOO—**National Emission Standards for Hazardous Air Pollutants: Printing, Coating, and Dyeing of Fabrics and Other Textiles.

302.73 **Subpart PPPP—**National Emission Standards for Hazardous Air Pollutants for Surface Coating of Plastic Parts and Products.

302.74 **Subpart QQQQ—**National Emission Standards for Hazardous Air Pollutants: Surface Coating of Wood Building Products.

302.75 **Subpart RRRR—**National Emission Standards for Hazardous Air Pollutants: Surface Coating of Metal Furniture.

302.76 **Subpart SSSS—**National Emission Standards for Hazardous Air Pollutants: Surface Coating of Metal Coil.

302.77 **Subpart TTTT—**National Emission Standards for Hazardous Air Pollutants for Leather Finishing Operations.

302.78 **Subpart UUUU—**National Emission Standards for Hazardous Air Pollutants for Cellulose Products Manufacturing.

302.79 **Subpart VVVV—**National Emission Standards for Hazardous Air Pollutants for Boat Manufacturing.

302.80 **Subpart WWWW—**National Emission Standards for Hazardous Air Pollutants: Reinforced Plastic Composites Production.

302.81 **Subpart XXXX—**National Emission Standards for Hazardous Air Pollutants: Rubber Tire Manufacturing.

302.82 **Subpart YYYY—**National Emission Standards for Hazardous Air Pollutants for Stationary Combustion Turbines.

302.83 **Subpart ZZZZ—**National Emission Standards for Hazardous Air Pollutants for Stationary Reciprocating Internal Combustion Engines.

302.84 **Subpart AAAAA—**National Emission Standards for Hazardous Air Pollutants for Lime Manufacturing Plants.

302.85 **Subpart BBBBB—**National Emission Standards for Hazardous Air Pollutants for Semiconductor Manufacturing.

302.86 **Subpart CCCCC—**National Emission Standards for Hazardous Air Pollutants for Coke Ovens: Pushing, Quenching, and Battery Stacks.

302.87 **Subpart DDDDD—**National Emission Standards for Hazardous Air Pollutants for Major Sources: Industrial, Commercial, and Institutional Boilers and Process Heaters.

302.88 **Subpart EEEEE—**National Emission Standards for Hazardous Air Pollutants for Iron and Steel Foundries.

302.89 **Subpart FFFFF—**National Emission Standards for Hazardous Air Pollutants for Integrated Iron and Steel Manufacturing Facilities.

302.90 **Subpart GGGGG—**National Emission Standards for Hazardous Air Pollutants: Site Remediation.

302.91 **Subpart HHHHH—**National Emission Standards for Hazardous Air Pollutants: Miscellaneous Coating Manufacturing.

306.92 **Subpart IIIII—**National Emission Standards for Hazardous Air Pollutants: Mercury Emissions from Mercury Cell Chlor-Alkali Plants.

302.93 **Subpart JJJJJ—**National Emission Standards for Hazardous Air Pollutants for Brick and Structural Clay Products Manufacturing.

302.94 **Subpart KKKKK—**National Emission Standards for Hazardous Air Pollutants for Clay Ceramics Manufacturing.

302.95 **Subpart LLLLL—**National Emission Standards for Hazardous Air Pollutants: Asphalt Processing and Asphalt Roofing Manufacturing.

302.96 **Subpart MMMMM—**National Emission Standards for Hazardous Air Pollutants: Flexible Polyurethane Foam Fabrication Operations.

302.97 **Subpart NNNNN—**National Emission Standards for Hazardous Air Pollutants: Hydrochloric Acid Production.

302.98 **Subpart PPPPP—**National Emission Standards for Hazardous Air Pollutants for Engine Test Cells/Stands.

302.99 **Subpart QQQQQ—**National Emission Standards for Hazardous Air Pollutants for Friction Materials Manufacturing Facilities.

302.100 **Subpart RRRRR—**National Emission Standards for Hazardous Air Pollutants: Taconite Iron Ore Processing.

302.101 **Subpart SSSSS—**National Emission Standards for Hazardous Air Pollutants for Refractory Products Manufacturing.

302.102 **Subpart TTTTT—**National Emission Standards for Hazardous Air Pollutants for Primary Magnesium Refining.

302.103 **Subpart UUUUU**—National Emission Standards for Hazardous Air Pollutants: Coal- and Oil-Fired Electric Utility Steam Generating Units.

302.104 **Subpart WWWWW—**National Emission Standards for Hospital Ethylene Oxide Sterilizers.

302.105 **Subpart YYYYY—**National Emission Standards for Hazardous Air Pollutants for Area Sources: Electric Arc Furnace Steelmaking Facilities.

302.106 **Subpart ZZZZZ—**National Emission Standards for Hazardous Air Pollutants for Iron and Steel Foundries Area Sources.

302.107 **Subpart BBBBBB**—National Emission Standards for Hazardous Air Pollutants for Source Category: Gasoline Distribution Bulk Terminals, Bulk Plants, and Pipeline Facilities.

302.108 **Subpart CCCCCC**—National Emission Standards for Hazardous Air Pollutants for Source Category: Gasoline Dispensing Facilities.

302.109 **Subpart DDDDDD**—National Emission Standards for Hazardous Air Pollutants for Polyvinyl Chloride and Copolymers Production Area Sources.

302.110 **Subpart EEEEEE**—National Emission Standards for Hazardous Air Pollutants: Primary Copper Smelting Area Sources.

302.111 **Subpart FFFFFF**—National Emission Standards for Hazardous Air Pollutants: Secondary Copper Smelting Area Sources.

302.112 **Subpart GGGGGG—**National Emission Standards for Hazardous Air Pollutants for Primary Nonferrous Metals Area Sources--Zinc, Cadmium, and Beryllium.

302.113 **Subpart HHHHHH—**National Emission Standards for Hazardous Air Pollutants: Paint Stripping and Miscellaneous Surface Coating Operations at Area Sources.

302.114 **Subpart JJJJJJ—**National Emission Standards for Hazardous Air Pollutants for Area Sources: Industrial, Commercial, and Institutional Boilers.

302.115 **Subpart LLLLLL—**National Emission Standards for Hazardous Air Pollutants for Acrylic and Modacrylic Fibers Production Area Sources.

302.116 **Subpart MMMMMM—**National Emission Standards for Hazardous Air Pollutants for Carbon Black Production Area Sources.

302.117 **Subpart NNNNNN—**National Emission Standards for Hazardous Air Pollutants for Chemical Manufacturing Area Sources: Chromium Compounds.

302.118 **Subpart OOOOOO**—National Emission Standards for Hazardous Air Pollutants for Flexible Polyurethane Foam Production and Fabrication Area Sources.

302.119 **Subpart PPPPPP**—National Emission Standards for Hazardous Air Pollutants for Lead Acid Battery Manufacturing Area.

302.120 **Subpart QQQQQQ**—National Emission Standards for Hazardous Air Pollutants for Wood Preserving Area Sources.

302.121 **Subpart RRRRRR**—National Emission Standards for Hazardous Air Pollutants for Clay Ceramics Manufacturing Area Sources.

302.122 **Subpart SSSSSS**—National Emission Standards for Hazardous Air Pollutants for Glass Manufacturing Area Sources.

302.123 **Subpart TTTTTT**—National Emission Standards for Hazardous Air Pollutants for Secondary Nonferrous Metals Processing Area Sources.

302.124 **Subpart VVVVVV**—National Emission Standards for Hazardous Air Pollutants for Chemical Manufacturing Area Sources.

302.125 **Subpart WWWWWW**—National Emission Standards for Hazardous Air Pollutants: Area Source Standards for Plating and Polishing Operations.

302.126 **Subpart XXXXXX**—National Emission Standards for Hazardous Air Pollutants Area Source Standards for Nine Metal Fabrication and Finishing Source Categories.

302.127 **Subpart YYYYYY**—National Emission Standards for Hazardous Air Pollutants for Area Sources: Ferroalloys Production Facilities.

302.128 **Subpart ZZZZZZ**—National Emission Standards for Hazardous Air Pollutants: Area Source Standards for Aluminum, Copper, and Other Nonferrous Foundries.

302.129 **Subpart AAAAAAA**—National Emission Standards for Hazardous Air Pollutants for Area Sources: Asphalt Processing and Asphalt Roofing.

302.130 **Subpart BBBBBBB**—National Emission Standards for Hazardous Air Pollutants for Area Sources: Chemical Preparations Industry.

302.131 **Subpart CCCCCCC**—National Emission Standards for Hazardous Air Pollutants for Area Sources: Paints and Allied Products Manufacturing.

302.132 **Subpart DDDDDDD**—National Emission Standards for Hazardous Air Pollutants for Area Sources: Prepared Feeds Manufacturing.

302.133 **Subpart EEEEEEE**—National Emission Standards for Hazardous Air Pollutants: Gold Mine Ore Processing And Production Area Source Category.

302.134 **Subpart HHHHHHH—**National Emission Standards for Hazardous Air Pollutant Emissions for Polyvinyl Chloride and Copolymers Production.

303 ADDITIONAL REQUIREMENTS:

303.1 From the general standards identified in Section 301 of this rule, delete 40 CFR 61.04. All requests, reports, applications, submittals, and other communications to the Control Officer pursuant to this rule shall be submitted to the Maricopa County Air Quality Department, 1001 N. Central Ave., Suite 125, Phoenix, AZ, 85004.

303.2 Where the Act has established provisions, including specific schedules, for the regulation of source categories pursuant to Sections 112(e)(5) and 112(n) of the Act, the Control Officer may enforce those provisions.

303.3 For any category or subcategory of sources licensed by the U.S. Nuclear Regulatory Commission, the Board of Supervisors shall not adopt and the Control Officer shall not enforce any standard or limitation respecting emissions of radionuclides which is more stringent than the standard or limitation adopted by the Administrator pursuant to Section 112 of the Act.

303.4 If the Administrator finds by rule that regulation is not appropriate or necessary or that alternative control strategies should be applied, the Control Officer shall administer and enforce this rule based on the Administrator's findings.

SECTION 400 – ADMINISTRATIVE REQUIREMENTS

401 CONTROL TECHNOLOGY DETERMINATIONS FOR MAJOR SOURCES IN ACCORDANCE WITH CLEAN AIR ACT SECTIONS, SECTIONS 112(g) AND 112(j): 40 CFR 63.40 through 40 CFR 63.44 and 40 CFR 63.50 through 40 CFR 63.56 are adopted by reference.

402 COMPLIANCE EXTENSIONS FOR EARLY REDUCTION OF FEDERALLY LISTED HAZARDOUS AIR POLLUTANTS: 40 CFR 63.70 through 40 CFR 63.81 and Table 370.1 are adopted by reference.

SECTION 500 – MONITORING AND RECORDS (NOT APPLICABLE)

TABLE 370-1. FEDERAL LIST OF HAZARDOUS AIR POLLUTANTS

A. All of the following are federally listed hazardous air pollutants:

CAS No.	Chemical Name
75-07-0	Acetaldehyde
60-35-5	Acetamide
75-05-8	Acetonitrile
98-86-2	Acetophenone
53-96-3	2-Acetylaminofluorene
107-02-8	Acrolein
79-06-1	Acrylamide
79-10-7	Acrylic acid
107-13-1	Acrylonitrile
107-05-1	Allyl chloride
92-67-1	4-Aminobiphenyl
62-53-3	Aniline
90-04-0	o-Anisidine
1332-21-4	Asbestos
71-43-2	Benzene (including benzene from gasoline)
92-87-5	Benzidine
98-07-7	Benzotrichloride
100-44-7	Benzyl chloride
92-52-4	Biphenyl
117-81-7	Bis(2-ethylhexyl)phthalate (DEHP)
542-88-1	Bis(chloromethyl)ether
75-25-2	Bromoform
106-99-0	1,3-Butadiene
156-62-7	Calcium cyanamide
133-06-2	Captan
63-25-2	Carbaryl
75-15-0	Carbon disulfide
56-23-5	Carbon tetrachloride
463-58-1	Carbonyl sulfide
120-80-9	Catechol
133-90-4	Chloramben
57-74-9	Chlordane
7782-50-5	Chlorine
79-11-8	Chloroacetic acid
532-27-4	2-Chloroacetophenone
108-90-7	Chlorobenzene
510-15-6	Chlorobenzilate
67-66-3	Chloroform
107-30-2	Chloromethyl methyl ether
126-99-8	Chloroprene
1319-77-3	Cresols/Cresylic acid (isomers and mixture)
95-48-7	o-Cresol
108-39-4	m-Cresol
106-44-5	p-Cresol
98-82-8	Cumene
94-75-7	2,4-D, salts and esters
3547-04-4	DDE
334-88-3	Diazomethane
132-64-9	Dibenzofurans
96-12-8	1,2-Dibromo-3-chloropropane
84-74-2	Dibutylphthalate
106-46-7	1,4-Dichlorobenzene(p)
91-94-1	3,3-Dichlorobenzidene
111-44-4	Dichloroethyl ether (Bis(2-chloroethyl)ether)
542-75-6	1,3-Dichloropropene
62-73-7	Dichlorvos
111-42-2	Diethanolamine
121-69-7	N,N-Diethyl aniline (N,N-Dimethylaniline)
64-67-5	Diethyl sulfate
119-90-4	3,3-Dimethoxybenzidine
60-11-7	Dimethyl aminoazobenzene
119-93-7	3,3'-Dimethyl benzidine
79-44-7	Dimethyl carbamoyl chloride
68-12-2	Dimethyl formamide
57-14-7	1,1-Dimethyl hydrazine
131-11-3	Dimethyl phthalate
77-78-1	Dimethyl sulfate
534-52-1	4,6-Dinitro-o-cresol, and salts
51-28-5	2,4-Dinitrophenol
121-14-2	2,4-Dinitrotoluene
123-91-1	1,4-Dioxane (1,4-Diethyleneoxide)
122-66-7	1,2-Diphenylhydrazine
106-89-8	Epichlorohydrin (1-Chloro-2,3-epoxypropane)
106-88-7	1,2-Epoxybutane
140-88-5	Ethyl acrylate
100-41-4	Ethyl benzene
51-79-6	Ethyl carbamate (Urethane)
75-00-3	Ethyl chloride (Chloroethane)
106-93-4	Ethylene dibromide (Dibromoethane)
107-06-2	Ethylene dichloride (1,2-Dichloroethane)
107-21-1	Ethylene glycol
151-56-4	Ethylene imine (Aziridine)
75-21-8	Ethylene oxide
96-45-7	Ethylene thiourea
75-34-3	Ethylidene dichloride (1,1-Dichloroethane)
50-00-0	Formaldehyde
76-44-8	Heptachlor
118-74-1	Hexachlorobenzene
87-68-3	Hexachlorobutadiene
77-47-4	Hexachlorocyclopentadiene
67-72-1	Hexachloroethane
822-06-0	Hexamethylene-1,6-diisocyanate
680-31-9	Hexamethylphosphoramide
110-54-3	Hexane
302-01-2	Hydrazine
7647-01-0	Hydrochloric acid
7664-39-3	Hydrogen fluoride (Hydrofluoric acid)
123-31-9	Hydroquinone
78-59-1	Isophorone
58-89-9	Lindane (all isomers)
108-31-6	Maleic anhydride
67-56-1	Methanol

CAS No.	Chemical Name
72-43-5	Methoxychlor
74-83-9	Methyl bromide (Bromomethane)
74-87-3	Methyl chloride (Chloromethane)
71-55-6	Methyl chloroform (1,1,1-Trichloroethane)
60-34-4	Methyl hydrazine
74-88-4	Methyl iodide (Iodomethane)
108-10-1	Methyl isobutyl ketone (Hexone)
624-83-9	Methyl isocyanate
80-62-6	Methyl methacrylate
1634-04-4	Methyl tert butyl ether
101-14-4	4,4-Methylene bis (2-chloroaniline)
75-09-2	Methylene chloride (Dichloromethane)
101-68-8	Methylene diphenyl diisocyanate (MDI)
101-77-9	4,4'-Methylenedianiline
91-20-3	Naphthalene
98-95-3	Nitrobenzene
92-93-3	4-Nitrobiphenyl
100-02-7	4-Nitrophenol
79-46-9	2-Nitropropane
684-93-5	N-Nitroso-N-methylurea
62-75-9	N-Nitrosodimethylamine
59-89-2	N-Nitrosomorpholine
56-38-2	Parathion
82-68-8	Pentachloronitrobenzene (Quintobenzene)
87-86-5	Pentachlorophenol
108-95-2	Phenol
106-50-3	p-Phenylenediamine
75-44-5	Phosgene
7803-51-2	Phosphine
7723-14-0	Phosphorus
85-44-9	Phthalic anhydride
1336-36-3	Polychlorinated biphenyls (Aroclors)
1120-71-4	1,3-Propane sultone
57-57-8	beta-Propiolactone
123-38-6	Propionaldehyde
114-26-1	Propoxur (Baygon)
78-87-5	Propylene dichloride (1,2-Dichloropropane)
75-56-9	Propylene oxide
75-55-8	1,2-Propylenimine (2-Methylaziridine)
91-22-5	Quinoline
106-51-4	Quinone
100-42-5	Styrene
96-09-3	Styrene oxide
1746-01-6	2,3,7,8-Tetrachlorodibenzo-p-dioxin

CAS No.	Chemical Name
79-34-5	1,1,2,2-Tetrachloroethane
127-18-4	Tetrachloroethylene (Perchloroethylene)
7550-45-0	Titanium tetrachloride
108-88-3	Toluene
95-80-7	2,4-Toluene diamine
584-84-9	2,4-Toluene diisocyanate
95-53-4	o-Toluidine
8001-35-2	Toxaphene (chlorinated camphene)
120-82-1	1,2,4-Trichlorobenzene
79-00-5	1,1,2-Trichloroethane
79-01-6	Trichloroethylene
95-95-4	2,4,5-Trichlorophenol
88-06-2	2,4,6-Trichlorophenol
121-44-8	Triethylamine
1582-09-8	Trifluralin
540-84-1	2,2,4-Trimethylpentane
108-05-4	Vinyl acetate
593-60-2	Vinyl bromide
75-01-4	Vinyl chloride
75-35-4	Vinylidene chloride (1,1-Dichloroethylene)
1330-20-7	Xylenes (isomers and mixture)
95-47-6	o-Xylenes
108-38-3	m-Xylenes
106-42-3	p-Xylenes
0	Antimony Compounds
0	Arsenic Compounds inorganic including arsine)
0	Beryllium Compounds
0	Cadmium Compounds
0	Chromium Compounds
0	Cobalt Compounds
0	Coke Oven Emissions
0	Cyanide Compounds[1]
0	Glycol ethers[2]
0	Lead Compounds
0	Manganese Compounds
0	Mercury Compounds
0	Fine mineral fibers[3]
0	Nickel Compounds
0	Polycyclic Organic Matter[4]
0	Radionuclides (including radon)[5]
0	Selenium Compounds

B. The following applies for all listings above which contain the word "compounds" or are glycol ethers: unless otherwise specified, these listings are defined as including any unique chemical substance that contains the named chemical (i.e., antimony, arsenic, etc.) as part of that chemical's infrastructure.

[1] X'CN where X = H' or any other group where a formal dissociation may occur (e.g. KCN or Ca(CN)2).

[2] a. Includes mono- and di- ethers of ethylene glycol, diethylene glycol, and triethylene glycol R-$(OCH_2CH_2)_n$-OR' where:

n = 1, 2, or 3;

R = alkyl C7 or less; or

R = phenyl or alkyl substituted phenyl;

R' = H or alkyl C7 or less; or

OR' consisting of carboxylic acid ester, sulfate, phosphate, nitrate, or sulfonate.

b. Glycol ethers do not include ethylene glycol monobutyl ether (EGBE, 2-Butoxyethanol) (CAS No. 111-76-2).

[3] Includes mineral fiber emissions from facilities manufacturing or processing glass, rock, or slag fibers (or other mineral derived fibers) of average diameter one micrometer or less.

[4] Includes organic compounds which have more than one benzene ring and which have a boiling point greater than or equal to 212 ºF (100 ºC).

[5] A type of atom which spontaneously undergoes radioactive decay.

REGULATION III – CONTROL OF AIR CONTAMINANTS

RULE 371
ACID RAIN

INDEX

SECTION 100 – GENERAL

101 PURPOSE

102 APPLICABILITY

103 SEVERABILITY

104 AVAILABILITY OF INFORMATION

105 FEDERAL DELEGATION AUTHORITY

SECTION 200 – DEFINITIONS (NOT APPLICABLE)

SECTION 300 – STANDARDS

301 INCORPORATED SUBPARTS OF THE FEDERAL ACID RAIN REGULATIONS

302 FEDERAL REGULATORY REVISIONS

SECTION 400 – ADMINISTRATIVE REQUIREMENTS (NOT APPLICABLE)

SECTION 500 – MONITORING AND RECORDS (NOT APPLICABLE)

Adopted 02/15/95; Revised 04/03/96; Revised 03/01/00; Revised 03/07/01; Revised 11/19/03; Revised 03/15/06; Revised 12/17/08; Revised 09/16/09; Revised 07/07/10; Revised 08/17/11; Revised 07/25/12; and **Revised March 26, 2014.**

MARICOPA COUNTY
AIR POLLUTION CONTROL REGULATIONS
REGULATION III – CONTROL OF AIR CONTAMINANTS

RULE 371
ACID RAIN

SECTION 100 – GENERAL

101 **PURPOSE:** To incorporate by reference the Acid Rain federal regulations in order to obtain delegated authority to enforce portions of the Clean Air Act Amendments of 1990 (CAAA).

102 **APPLICABILITY:** This rule applies to those affected units as described in 40 Code of Federal Regulations (CFR) 72.6 which has been adopted by reference and no future additions or amendments. Any such stationary source must also comply with other Maricopa County Air Pollution Control Regulations.

103 **SEVERABILITY:** If the provisions or requirements of the regulations incorporated pursuant to this rule conflict with any of the remaining portions of these rules, the regulations incorporated pursuant to this rule shall apply and shall take precedence.

104 **AVAILABILITY OF INFORMATION:** Copies of 40 CFR Part 72 (Permits Regulation), 40 CFR Part 74 (Sulfur Dioxide Opt-Ins), 40 CFR Part 75 (Continuous Emission Monitoring), and 40 CFR 76 (Acid Rain Nitrogen Oxides Emission Reduction Program) and all accompanying appendices currently enforced by the department are available electronically at: ecfr.gpoaccess.gov; at the Maricopa County Air Quality Department, 1001 N. Central Ave., Suite 125, Phoenix, AZ, 85004; or by calling (602) 506-6010 for information. ASTM standards are available from ASTM International, 100 Barr Harbor Drive, P.O. Box C700, West Conshohocken, PA 19428, or from its website at www.astm.org.

105 **FEDERAL DELEGATION AUTHORITY:** The department shall enforce the Federal Acid Rain Regulations which have been delegated to the County by the United States Environmental Protection Agency (EPA) for such enforcement. The department may, in addition, enforce such other Acid Rain Rules as delegated for such enforcement by the EPA to the County.

SECTION 200 – DEFINITIONS: See Rule 100 (General Provisions and Definitions) of these rules for definitions of terms that are used but not specifically defined in this rule.

SECTION 300 – STANDARDS

301 **INCORPORATED SUBPARTS OF THE FEDERAL ACID RAIN REGULATIONS:** 40 CFR Parts 72, 74, 75 and 76 and all accompanying appendices, adopted as of July 1, 2013, (and no future additions or amendments) are incorporated by reference as applicable requirements.

302 **FEDERAL REGULATORY REVISIONS:** The Maricopa County Board of Supervisors shall take action following promulgation by the Environmental Protection Agency (EPA) of regulations implementing Section 407 and Section 410 of the Clean Air Act (CAA), or revising either Part 72, 74, 75, and/or 76 of the regulations implementing Section 407 or Section 410 of the CAA, to either incorporate such new or revised provisions by reference or to submit, for the EPA approval, the Maricopa County Air Pollution Control Regulations implementing these provisions.

SECTION 400 – ADMINISTRATIVE REQUIREMENTS (NOT APPLICABLE)

SECTION 500 – MONITORING AND RECORDS (NOT APPLICABLE)

REGULATION III - CONTROL OF AIR CONTAMINANTS
RULE 372
MARICOPA COUNTY HAZARDOUS AIR POLLUTANTS (HAPS) PROGRAM

INDEX

SECTION 100 - GENERAL

101 PURPOSE

102 APPLICABILITY

103 EXEMPTIONS

SECTION 200 - DEFINITIONS

201 ACUTE ADVERSE EFFECTS TO HUMAN HEALTH

202 ACUTE AMBIENT AIR CONCENTRATION (AAAC)

203 AFFECTED SOURCE

204 AMBIENT AIR CONCENTRATION (AAC)

205 ARIZONA MAXIMUM ACHIEVABLE CONTROL TECHNOLOGY (AZMACT)

206 CHEMICAL ABSTRACT SERVICE (CAS) NUMBER

207 CHRONIC ADVERSE EFFECTS TO HUMAN HEALTH

208 CHRONIC AMBIENT AIR CONCENTRATION (CAAC)

209 FEDERALLY LISTED HAZARDOUS AIR POLLUTANT

210 HAZARDOUS AIR POLLUTANT

211 MAJOR SOURCE OF MARICOPA COUNTY HAZARDOUS AIR POLLUTANTS (HAPs)

212 MARICOPA COUNTY HAZARDOUS AIR POLLUTANT (HAP)

213 MINOR SOURCE OF MARICOPA COUNTY HAZARDOUS AIR POLLUTANTS (HAPs)

214 MODIFICATION / MODIFY

215 POTENTIAL TO EMIT / POTENTIAL EMISSION RATE

216 SIC CODE

217 TECHNOLOGY TRANSFER

SECTION 300 - STANDARDS

301 MARICOPA COUNTY LIST OF HAZARDOUS AIR POLLUTANTS

302 NOTICE OF TYPES AND AMOUNTS OF HAPS

303 MODIFICATIONS; PERMITS; PERMIT REVISIONS

304 CASE-BY-CASE HAPRACT DETERMINATION

305 CASE-BY-CASE AZMACT DETERMINATION

306 RISK MANAGEMENT ANALYSES

SECTION 400 - ADMINISTRATIVE REQUIREMENTS

401 EFFECTIVE DATE

402 PERIODIC REVIEW

SECTION 500 - MONITORING AND RECORDS (NOT APPLICABLE)

Adopted 06/06/07

MARICOPA COUNTY
AIR POLLUTION CONTROL REGULATIONS
REGULATION III - CONTROL OF AIR CONTAMINANTS
RULE 372
MARICOPA COUNTY HAZARDOUS AIR POLLUTANTS (HAPS) PROGRAM

SECTION 100 - GENERAL

101 PURPOSE: To implement/establish procedures for a Maricopa County program for the regulation of federally listed hazardous air pollutants (HAPs).

102 APPLICABILITY:

102.1 Unless otherwise noted, this rule applies to:

a. Minor sources of Maricopa County hazardous air pollutants (HAPs) that are in one of the source categories listed in Table 1-Maricopa County HAPs Minor Source Categories of this rule; and

b. Major sources of Maricopa County hazardous air pollutants (HAPs).

Table 1-Maricopa County HAPs Minor Source Categories

Primary SIC Code	Source Category
2434	Wood Kitchen Cabinets
2451	Mobile Homes
2621	Paper Mills
2679	Converted Paper Products-Not Elsewhere Classified
2851	Paints And Allied Products
2911	Petroleum Refining
3086	Plastics Foam Products
3088	Plastics Plumbing Fixtures
3089	Plastics Products-Not Elsewhere Classified
3241	Cement-Hydraulic
3281	Cut Stone And Stone Products
3296	Mineral Wool
3312	Blast Furnaces And Steel Mills
3331	Primary Copper
3411	Metal Cans
3444	Sheet Metal Work
3451	Screw Machine Products
3479	Metal Coating And Allied Services
3585	Refrigeration And Heating Equipment
3672	Printed Circuit Boards

3999	Manufacturing Industries-Not Elsewhere Classified
4922	Natural Gas Transmission
5169	Chemicals And Allied Products-Not Elsewhere Classified
5171	Petroleum Bulk Stations And Terminals

102.2 If the Clean Air Act has established provisions including specific schedules for the regulation of source categories under Section 112(e)(5) and Section 112(n) of the Act, those provisions and schedules shall apply to the regulation of those source categories.

103 EXEMPTIONS: This rule shall not apply to:

103.1 An affected source for which a standard under 40 Code Of Federal Regulations (CFR) Part 61-National Emission Standards For Hazardous Air Pollutants (NESHAPS) or 40 CFR Part 63-National Emission Standards For Hazardous Air Pollutants For Source Categories imposes an emissions limitation.

103.2 An affected source at a minor source of Maricopa County HAPs, if the minor source is in a source category for which a standard under 40 CFR Part 63-National Emission Standards For Hazardous Air Pollutants For Source Categories has been adopted and agrees to comply with the emissions limitation under Rule 220-Non-Title V Permit Provisions, Section 304-Permits Containing Voluntarily Accepted Emissions Limitations, Controls, Or Other Requirements (Synthetic Minor) of these rules.

103.3 Sources for which the Administrator has made one of the following findings under Section 112(n) of the Act (42 U.S.C. 7412(n)):

a. A finding that regulation is not appropriate or necessary, or

b. A finding that the source should apply alternative control strategies.

103.4 Any category or subcategory of facilities licensed by the Nuclear Regulatory Commission. The Control Officer shall not adopt or enforce any standard or limitation respecting emissions of radionuclides, which is more stringent than the standard or limitation adopted by the Administrator under Section 112 of the Act.

SECTION 200 - DEFINITIONS: See Rule 100-General Provisions And Definitions of these rules for definitions of terms that are used but not specifically defined in this rule. For the purpose of this rule, the following definition shall apply:

201 ACUTE ADVERSE EFFECTS TO HUMAN HEALTH - Those effects described in Arizona Revised Statutes (ARS) §49-401.01(2)-Air Quality-General Provisions-Definitions that are of short duration or rapid onset. In ARS 49-401.01(2)-Air Quality-General Provisions-Definitions, "Adverse effects to human health" means those effects that result in or significantly contribute to an increase in mortality or an increase in serious irreversible or incapacitating reversible illness, including adverse effects that are known to be or may reasonably be anticipated to be caused by substances that are acutely toxic, chronically toxic, carcinogenic, mutagenic, teratogenic, neurotoxic, or causative of reproductive dysfunction.

202 ACUTE AMBIENT AIR CONCENTRATION (AAAC) - That concentration of a hazardous air pollutant, in the ambient air, above which the general population, including susceptible populations, could experience acute adverse effects to human health.

203 AFFECTED SOURCE - Notwithstanding the definition of "affected source" as defined in Rule 100-General Provisions And Definitions of these rules (a source that includes one or more emissions units which are subject to emission reduction requirements or limitations under Title IV-Acid Deposition Control of the Act), for the purpose of this rule "affected source" has the meaning of "affected source" contained in 40 CFR 63.2-National Emission Standards For Hazardous Air Pollutants For Source Categories-Definitions as of July 1, 2004 (and no future amendments or editions) (the collection of equipment, activities, or both within a single contiguous area and under common control that is included in a Section 112(c) source category or subcategory for which a Section 112(d) standard or other relevant standard is established pursuant to Section 112 of the Act. Each relevant standard will define the "affected source", as defined in 40 CFR 63.2-National Emission Standards For Hazardous Air Pollutants For Source Categories-Definitions unless a different definition is warranted based on a published justification as to why this definition would result in significant administrative, practical, or implementation problems and why the different definition would resolve those problems. The term "affected source", as used in 40 CFR 63.2-National Emission Standards For Hazardous Air Pollutants For Source Categories-Definitions, is separate and distinct from any other use of that term in these rules such as those implementing Title IV of the Act. Affected source may be defined differently for 40 CFR Part 63-National Emission Standards For Hazardous Air Pollutants For Source Categories than affected facility and stationary source in 40 CFR Part 60-Standards Of Performance For New Stationary Sources and 40 CFR Part 61-National Emission Standards For Hazardous Air Pollutants (NESHAPS), respectively. This definition of "affected source", and the procedures for adopting an alternative definition of "affected source," shall apply to each Section 112(d) standard for which the initial proposed rule is signed by the Administrator after June 30, 2002).

204 AMBIENT AIR CONCENTRATION (AAC) - That concentration of a hazardous air pollutant in the ambient air, listed in Section 306- Risk Management Analyses of this rule or determined according to Section 306.3(b)-Risk Management Analyses-Health Based Ambient Air Concentrations Of Maricopa County HAPs of this rule or Section 306.3(c)-Risk Management Analyses-Health Based Ambient Air Concentrations Of Maricopa County HAPs of this rule, above which the general population, including susceptible populations, could experience adverse effects to human health.

205 ARIZONA MAXIMUM ACHIEVABLE CONTROL TECHNOLOGY (AZMACT) - An emission standard that requires the maximum degree of reduction in emissions of hazardous air pollutants subject to these rules, including a prohibition on the emissions where achievable, and that the Control Officer, according to Section 305-Case-By-Case AZMACT Determination of this rule, has determined to be achievable by an affected source to which the standard applies, through application of measures, processes, methods, systems, or techniques, including measures that:

205.1 Reduce the volume of, or eliminate emissions of, the pollutants through process changes, substitution of materials, or other modifications;

205.2 Enclose systems or processes to eliminate emissions;

205.3 Collect, capture, or treat the pollutants when released from a process, stack, storage, or fugitive emissions point;

205.4 Are design, equipment, work practice, or operational standards, including requirements for operator training or certification; or

205.5 Are a combination of Section 205.1 thru Section 205.4 of this rule.

206 CHEMICAL ABSTRACT SERVICE (CAS) NUMBER - A unique, identifying number assigned by the Chemical Abstract Service to each distinct chemical substance.

207 CHRONIC ADVERSE EFFECTS TO HUMAN HEALTH - Those effects described in ARS §49-401.01(2)-Air Quality Generally-General Provisions-Definitions that are persistent, recurring, or long-term in nature or that are delayed in their onset. ARS 49-401.01(2)-Air Quality Generally-General Provisions-Definitions defines "adverse effects to human health" as those effects that result in or significantly contribute to an increase in mortality or an increase in serious irreversible or incapacitating reversible illness, including adverse effects that are known to be or may reasonably be anticipated to be caused by substances that are acutely toxic, chronically toxic, carcinogenic, mutagenic, teratogenic, neurotoxic, or causative of reproductive dysfunction.

208 CHRONIC AMBIENT AIR CONCENTRATION (CAAC) - That concentration of a hazardous air pollutant, in the ambient air, above which the general population,

including susceptible populations, could experience chronic adverse effects to human health.

209 FEDERALLY LISTED HAZARDOUS AIR POLLUTANT - Any pollutant adopted under Section 301-Maricopa County List Of Hazardous Air Pollutants of this rule.

210 HAZARDOUS AIR POLLUTANT - Any federally listed hazardous air pollutant.

211 MAJOR SOURCE OF MARICOPA COUNTY HAZARDOUS AIR POLLUTANTS (HAPs) -

211.1 A stationary source that emits or has the potential to emit in the aggregate, including fugitive emissions, 10 tons per year or more of any Maricopa County hazardous air pollutant or 25 tons per year or more of any combination of Maricopa County hazardous air pollutants.

211.2 Any change to a minor source of hazardous air pollutants that would increase its emissions to the qualifying levels in Section 211.1 of this rule.

212 MARICOPA COUNTY HAZARDOUS AIR POLLUTANT (HAP) - Any federally listed hazardous air pollutant.

213 MINOR SOURCE OF MARICOPA COUNTY HAZARDOUS AIR POLLUTANTS (HAPs) - A stationary source that emits or has the potential to emit, including fugitive emissions, one ton or more but less than 10 tons per year of any hazardous air pollutant or two and one-half tons or more but less than 25 tons per year of any combination of hazardous air pollutants.

214 MODIFICATION / MODIFY -

214.1 A physical change in, or change in the method of operation of, a source that increases the actual emissions of any Maricopa County hazardous air pollutant (HAP) emitted by the source by more than any de minimis amount listed in Table 2-Maricopa County HAPs De Minimis Levels, or which results in the emission of any HAP not previously emitted by the source by more than any de minimis amount listed in Table 2- Maricopa County HAPs De Minimis Levels.

Table 2-Maricopa County HAPs De Minimis Levels

Chemical	De Minimis Lb/Hour	De Minimis Lb/Year
1,1,1-Trichloroethane (Methyl Chloroform)	117	14,247
1,1,2,2-Tetrachloroethane	N/A	0.20
1,3-Butadiene	N/A	0.39
1,4-Dichlorobenzene	N/A	1.9
2,2,4-Trimethylpentane	51	N/A
2,4-Dinitrotoluene	N/A	0.13
2-Chloroacetophenone	N/A	0.19
Acetaldehyde	N/A	5.3
Acetophenone	1.4	2,261
Acrolein	0.013	0.129
Acrylonitrile	N/A	0.17
Antimony Compounds (Selected Compound: Antimony)	0.71	9.0
Arsenic Compounds (Selected Compound: Arsenic)	N/A	0.0027
Benzene	N/A	1.5
Benzyl Chloride	N/A	0.25
Beryllium Compounds (Selected Compound: Beryllium)	0.000707	0.0049
Biphenyl	2.1	1,130
bis (2-Ethylhexy) Phthalate	0.71	3.0
Bromoform	0.42	11
Cadmium Compounds (Selected Compound: Cadmium)	N/A	0.0065
Carbon Disulfide	18	4,522
Carbon Tetrachloride	N/A	0.78
Carbonyl Sulfide	1.7	N/A
Chlorobenzene	57	6,442
Chloroform	N/A	2.2
Chromium Compounds (Selected Compound: Hexavalent Chromium)	N/A	0.0010
Cobalt Compounds (Selected Compound: Cobalt)	N/A	0.0042
Cumene	53	2,583
Cyanide Compounds (Selected Compound: Hydrogen Cyanide)	0.22	19
Dibenzofurans	1.4	45
Dichloromethane (Methylene Chloride)	20	25
Dimethyl Formamide	9.3	194
Dimethyl Sulfate	0.018	N/A
Ethyl Benzene	14	6,442
Ethyl Chloride (Chloroethane)	71	64,420

Etylene Dibromide (Dibromoethane)	N/A	0.020
Ethylene Dichloride (1,2-Dichloroethane)	N/A	0.45
Ethylene Glycol	2.8	2,583
Ethylidene Dichloride (1,1-Dichloroethane)	354	3,230
Formaldehyde	N/A	0.90
Glycol Ethers (Selected Compound: Diethylene Glycol, Monoethyl Ether)	14	19
Hexachlorobenzene	N/A	0.026
Hexane	659	13,689
Hydrochloric Acid	0.93	129
Hydrogen Fluoride (Hydrofluoric Acid)	0.56	90
Isophorone	0.71	12,946
Manganese Compounds (Selected Compound: Manganese)	0.14	0.32
Mercury Compounds (Selected Compound: Elemental Mercury)	0.058	1.9
Methanol	53	25,830
Methyl Bromide	15	32
Methyl Chloride	67	582
Methyl Hydrazine	N/A	0.0024
Methyl Isobutyl Ketone (Hexone)	28	19,388
Methyl Methacrylate	18	4,522
Methyl Tert-Butyl Ether	N/A	46
N, N-Dimethylaniline	1.4	45
Naphthalene	N/A	0.35
Nickel Compounds (Selected Compound: Nickel Refinery Dust)	N/A	0.049
Phenol	3.3	1,295
Polychlorinated Biphenyls (Selected Compound: Aroclor 1254)	N/A	0.12
Polycyclic Organic Matter (Selected Compound: Benzo(a)pyrene)	N/A	0.013
Propionaldehyde	N/A	5.3
Propylene Dichloride	14	26
Selenium Compounds (Selected Compound: Selenium)	0.028	113
Styrene	31	6,442
Tetrachloroethylene (Perchloroethylene)	N/A	2.0
Toluene	109	146,766
Trichlorethylene	N/A	0.10
Vinyl Acetate	22	1,295
Vinyl Chloride	N/A	1.3
Vinylidene Chloride (1,2-Dichloroethylene)	2.1	1,295
Xylene (Mixed Isomers)	98	644

214.2 A physical change in, or change in the method of operation of, a source that increases the actual emissions of any Maricopa County HAPs emitted

by the source, if it results in total source emissions that exceed one ton per year (tpy) of any individual HAP or 2.5 tpy of any combination of HAPs.

214.3 A physical change in, or change in the method of operation of, a source is not a modification subject to this rule, if:

a. The change, together with any other changes implemented or planned by the source, qualifies for an alternative emission limitation under Section 112(i)(5) of the Act;

b. The Clean Air Act Section 112(d) or Section 112(f) imposes a standard requiring the change that is implemented after the Administrator promulgates the standard;

c. The change is routine maintenance, repair, or replacement;

d. The change is the use of an alternative fuel or raw material by reason of an order under Section 2(a) and (b) of the Energy Supply And Environmental Coordination Act of 1974, 15 U.S.C. 792, or by reason of a natural gas curtailment plan under the Federal Power Act, 16 U.S.C. 792-825r;

e. The change is the use of an alternative fuel by reason of an order or rule under Section 125 of the Act;

f. The change is the use of an alternative fuel at a steam generating unit to the extent that the fuel is generated from municipal solid waste;

g. The change is an increase in the hours of operation or in the production rate, unless the change would be prohibited under an enforceable permit condition; or

h. The change is any change in ownership at a stationary source.

215 **POTENTIAL TO EMIT / POTENTIAL EMISSION RATE** - The maximum capacity of a stationary source to emit a pollutant, excluding secondary emissions, taking into account controls that are enforceable under any federal, state, or local law, rule, or regulation or that are inherent in the design of the source.

216 **SIC CODE** - The standard industrial classification code number for a source category derived from 1987 Standard Industrial Classification Manual (U.S. Office Of Management And Budget, 1987).

217 TECHNOLOGY TRANSFER - The process by which existing control technologies that have been successfully applied in other source categories that have similar processes or emissions units are reviewed for potential use in a different source category.

SECTION 300 - STANDARDS

301 MARICOPA COUNTY LIST OF HAZARDOUS AIR POLLUTANTS: The following federally listed hazardous air pollutants listed in Section 112(b)(1) of the Act (42 U.S.C. 7412(b)(1)) are hazardous air pollutants (HAPs) under this rule:

CAS No.	HAPs
75070	Acetaldehyde
60355	Acetamide
75058	Acetonitrile
98862	Acetophenone
53963	2-Acetylaminofluorene
107028	Acrolein
79061	Acrylamide
79107	Acrylic acid
107131	Acrylonitrile
107051	Allyl chloride
92671	4-Aminobiphenyl
62533	Aniline
90040	o-Anisidine
1332214	Asbestos
71432	Benzene (Including benzene from gasoline)
92875	Benzidine
98077	Benzotrichloride
100447	Benzyl chloride
92524	Biphenyl
117817	Bis(2-ethylhexyl)phthalate (DEHP)
542881	Bis(chloromethyl)ether
75252	Bromoform
106990	1,3-Butadiene
156627	Calcium cyanamide
133062	Captan
63252	Carbaryl
75150	Carbon disulfide
56235	Carbon tetrachloride
463581	Carbonyl sulfide
120809	Catechol
133904	Chloramben
57749	Chlordane
7782505	Chlorine
79118	Chloroacetic acid
532274	2-Chloroacetophenone
108907	Chlorobenzene

510156	Chlorobenzilate
67663	Chloroform
107302	Chloromethyl methyl ether
126998	Chloroprene
1319773	Cresols/Cresylic acid (Isomers and mixture)
95487	o-Cresol
108394	m-Cresol
106445	p-Cresol
98828	Cumene
94757	2,4-D, salts and esters
3547044	DDE
334883	Diazomethane
132649	Dibenzofurans
96128	1,2-Dibromo-3-chloropropane
84742	Dibutylphthalate
106467	1,4-Dichlorobenzene(p)
91941	3,3-Dichlorobenzidene
111444	Dichloroethyl ether (Bis(2-chloroethyl)ether)
542756	1,3-Dichloropropene
62737	Dichlorvos
111422	Diethanolamine
121697	N,N-Diethylaniline (N,N-Dimethylaniline)
64675	Diethyl sulfate
119904	3,3-Dimethoxybenzidine
60117	Dimethyl aminoazobenzene
119937	3,3'-Dimethyl benzidine
79447	Dimethyl carbamoyl chloride
68122	Dimethyl formamide
57147	1,1-Dimethyl hydrazine
131113	Dimethyl phthalate
77781	Dimethyl sulfate
534521	4,6-Dinitro-o-cresol, and salts
51285	2,4-Dinitrophenol
121142	2,4-Dinitrotoluene
123911	1,4-Dioxane (1,4-Diethyleneoxide)
122667	1,2-Diphenylhydrazine
106898	Epichlorohydrin (1-Chloro-2,3-epoxypropane)
106887	1,2-Epoxybutane
140885	Ethyl acrylate
100414	Ethyl benzene
51796	Ethyl carbamate (Urethane)
75003	Ethyl chloride (Chloroethane)
106934	Ethylene dibromide (Dibromoethane)
107062	Ethylene dichloride (1,2-Dichloroethane)
107211	Ethylene glycol
151564	Ethylene imine (Aziridine)
75218	Ethylene oxide
96457	Ethylene thiourea

75343	Ethylidene dichloride (1,1-Dichloroethane)
50000	Formaldehyde
76448	Heptachlor
118741	Hexachlorobenzene
87683	Hexachlorobutadiene
77474	Hexachlorocyclopentadiene
67721	Hexachloroethane
822060	Hexamethylene-1,6-diisocyanate
680319	Hexamethylphosphoramide
110543	Hexane
302012	Hydrazine
7647010	Hydrochloric acid
7664393	Hydrogen fluoride (Hydrofluoric acid)
123319	Hydroquinone
78591	Isophorone
58899	Lindane (All isomers)
108316	Maleic anhydride
67561	Methanol
72435	Methoxychlor
74839	Methyl bromide (Bromomethane)
74873	Methyl chloride (Chloromethane)
71556	Methyl chloroform (1,1,1-Trichloroethane)
60344	Methyl hydrazine
74884	Methyl iodine (Iodomethane)
108101	Methyl isobutyl ketone (Hexone)
624839	Methyl isocyanate
80626	Methyl methacrylate
1634044	Methyl tert butyl ether
101144	4,4-Methylene bis(2,chloroaniline)
75092	Methylene chloride (Dichloromethane)
101688	Methylene diphenyl diisocyanate (MDI)
101779	4,4-Methylenedianiline
91203	Naphthalene
98953	Nitrobenzene
92933	4-Nitrobiphenyl
100027	4-Nitrophenol
79469	2-Nitropropane
684935	N-Nitroso-N-methylurea
62759	N-Nitrosodimethylamine
59892	N-Nitrosomorpholine
56382	Parathion
82688	Pentachloronitrobenzene (Quintobenzene)
87865	Pentachlorophenol
108952	Phenol
106503	p-Phenylenediamine
75445	Phosgene
7803512	Phosphine
7723140	Phosphorus

85449	Phthalic anhydride
1336363	Polychlorinated biphenyls (Aroclors)
1120714	1,3-Propane sultone
57578	beta-Propiolactone
123386	Propionaldehyde
114261	Propoxur (Baygon)
78875	Propylene dichloride (1,2-Dichloropropane)
75569	Propylene oxide
75558	1,2-Propylenimine (2-Methyl aziridine)
91225	Quinoline
106514	Quinone
100425	Styrene
96093	Styrene oxide
1746016	2,3,7,8-Tetrachlorodibenzo-p-dioxin
79345	1,1,2,2-Tetrachloroethane
127184	Tetrachloroethylene (Perchloroethylene)
7550450	Titanium tetrachloride
108883	Toluene
95807	2,4-Toluene diamine
584849	2,4-Toluene diisocyanate
95534	o-Toluidine
8001352	Toxaphene (Chlorinated camphene)
120821	1,2,4-Trichlorobenzene
79005	1,1,2-Trichloroethane
79016	Trichloroethylene
95954	2,4,5-Trichlorophenol
88062	2,4,6-Trichlorophenol
121448	Triethylamine
1582098	Trifluralin
540841	2,2,4-Trimethylpentane
108054	Vinyl acetate
593602	Vinyl bromide
75014	Vinyl chloride
75354	Vinylidene chloride (1,1-Dichloroethylene)
1330207	Xylenes (Isomers and mixture)
95476	o-Xylenes
108383	m-Xylenes
106423	p-Xylenes

Antimony Compounds
Arsenic Compounds (Inorganic including arsine)
Beryllium Compounds
Cadmium Compounds
Chromium Compounds
Cobalt Compounds
Coke Oven Emissions
Cyanide Compounds

X'CN where X = H' or any other group where a formal dissociation may occur. For example, KCN or $Ca(CN)_2$

Glycol Ethers

a. Glycol ethers include mono- and di- ethers of ethylene glycol, diethylene glycol, and triethylene glycol R-(OCH_2CH_2)[n]-OR' where:
   (1) n = 1, 2, or 3;
   (2) R = alkyl C7 or less; or
   (3) R = phenyl or alkyl substituted phenyl;
   (4) R'= H or alkyl C7 or less; or
   (5) OR' consisting of carboxylic acid ester, sulfate, phosphate, nitrate, or sulfonate
b. Glycol ethers does not include ethylene glycol monobutyl ether

Lead Compounds
Manganese Compounds
Mercury Compounds
Fine Mineral Fibers (Including mineral fiber emissions from facilities manufacturing or processing glass, rock, or slag or other mineral-derived fibers of average diameter 1 micrometer or less)
Nickel Compounds
Polycyclic Organic Matter (Including organic compounds with more than one benzene ring and which have a boiling point greater than or equal to 100°C)
Radionuclides (Including radon. Radionuclide is a type of atom which spontaneously undergoes radioactive decay)
Selenium Compounds

302 NOTICE OF TYPES AND AMOUNTS OF HAPS: An owner and/or operator of a source subject to this rule shall provide the Control Officer with notice, in a permit application, of the types and amounts of HAPs emitted by the source. The notice shall include readily available data regarding emissions from the source. The Control Officer shall not require the owner and/or operator to conduct performance tests, sampling, or monitoring in order to fulfill the requirements of this section of this rule.

303 MODIFICATIONS; PERMITS; PERMIT REVISIONS:

303.1 Any person who constructs or modifies a source that is subject to this rule must first obtain a permit or significant permit revision that complies with:

a. Rule 210-Title V Permit Provisions of these rules or Rule 220-Non-Title V Permit Provisions of these rules; and

b. Section 303.2 of this rule or Section 303.3 of this rule.

303.2 A permit or significant permit revision that the Control Officer issues to a new or modified minor source of Maricopa County hazardous air pollutants (HAPs) that is in one of the source categories listed in Table 1-Maricopa County HAPs Minor Source Categories of this rule shall impose HAPRACT under Section 304 of this rule, unless the applicant demonstrates, with a risk management analysis (RMA) under Section 306 of this rule, that the

imposition of HAPRACT is not necessary to avoid adverse effects to human health or adverse environmental effects.

303.3 A permit or significant permit revision that the Control Officer issues to a new or modified major source of Maricopa County hazardous air pollutants (HAPs) shall impose AZMACT under Section 305 of this rule, unless the applicant demonstrates, with a risk management analysis (RMA) under Section 306 of this rule, that the imposition of AZMACT is not necessary to avoid adverse effects to human health or adverse environmental effects.

303.4 If the Control Officer establishes a general permit establishing HAPRACT according to Rule 230-General Permits of these rules, the following apply:

a. The owner and/or operator of a source covered by that general permit may obtain a variance from HAPRACT by complying with a risk management analysis (RMA) under Section 306 of this rule when the source applies for the general permit;

b. If the owner and/or operator makes the applicable demonstration required by a risk management analysis (RMA) under Section 306 of this rule and otherwise qualifies for the general permit, the Control Officer shall approve the application according to ARS §49-480-County Air Pollution Control-Permits; Fees and issue an authorization-to-operate granting a variance from the specific provisions of the general permit relating to HAPRACT; and

c. Except as modified by a variance, the general permit governs the source.

303.5 When determining whether HAP emissions from a new source or modification exceed the thresholds prescribed in Section 211-Definition Of Major Source Of Maricopa County Hazardous Air Pollutants (HAPs) of this rule and Section 213-Minor Source Of Maricopa County Hazardous Air Pollutants (HAPs) of this rule or a de minimis amount described in Table 2-Maricopa County HAPs De Minimis Levels in Section 214.1 of this rule, the Control Officer shall exclude particulate matter emissions that consist of natural crustal material and that are produced either by natural forces, such as wind or erosion, or by anthropogenic activities, such as agricultural operations, excavation, blasting, drilling, handling, storage, earthmoving, crushing, grinding, or traffic over paved or unpaved roads, or other similar activities.

303.6 In addition to the requirements of Appendix B-Standard Permit Application Form And Filing Instructions of these rules, an application for a permit or a permit revision required under this section of this rule shall include one of the following:

a. The applicant's proposal and documentation for HAPRACT under Section 304 of this rule;

b. The applicant's proposal and documentation for AZMACT under Section 305 of this rule; or

c. A risk management analysis (RMA) submitted under Section 306 of this rule.

303.7 Any applicant for a permit or a permit revision under this rule may request accelerated permit processing under Rule 200-Permit Requirements.

304 CASE-BY-CASE HAPRACT DETERMINATION:

304.1 The applicant shall include in the application sufficient documentation to show that the proposed control technology or methodology meets the requirements of ARS §49-480.04-County Air Pollution Control-County Program For Control Of Hazardous Air Pollutants and of this section of this rule.

304.2 An applicant subject to Section 303.2-Modifications; Permits; Permit Revisions of this rule shall propose HAPRACT for the new source or modification, to be included in the applicant's permit or significant permit revision. The applicant shall document each of the following steps:

a. The applicant shall identify the range of applicable control technologies, including:

(1) A survey of similar emission sources to determine the emission limitations currently achieved in practice in the United States;

(2) Controls applied to similar source categories, emissions units, or gas streams through technology transfer; and

(3) Innovative technologies that are demonstrated to be reliable, that reduce emissions for HAP under review at least to the extent achieved by the control technology that would otherwise have been proposed and that meets all the requirements of ARS §49-480.04-County Air Pollution Control-County Program For Control Of Hazardous Air Pollutants and this section of this rule.

b. The applicant shall propose as HAPRACT one of the control technologies identified under Section 304.2(a)-Case-By-Case HAPRACT Determination of this rule and shall provide:

(1) The rationale for selecting the specific control technologies from the range identified in Section 304.2(a)-Case-By-Case HAPRACT Determination;

(2) Estimated control efficiency, described as percent HAP removed;

(3) Expected emission rates in tons per year and pounds per hour;

(4) Expected emission reduction in tons per year and pounds per hour;

(5) Economic impacts and cost effectiveness of implementing the proposed control technology;

(6) Other environmental impacts of the proposed control technology; and

(7) Energy impact of the proposed technology.

c. The applicant shall identify rejected control technologies identified in Section 304.2(a)-Case-By-Case HAPRACT Determination of this rule and shall provide for each rejected control technology:

(1) The rationale for rejecting the specific control technologies identified in Section 304.2(a)-Case-By-Case HAPRACT Determination of this rule;

(2) Estimated control efficiency described as percent HAP removed;

(3) Expected emission rates in tons per year and pounds per hour;

(4) Expected emission reduction in tons per year and pounds per hour;

(5) Economic impact and cost effectiveness of implementing the rejected control technologies;

(6) Other environmental impact of the rejected control technology; and

(7) Energy impact of the rejected control technologies.

304.3 The Control Officer shall determine whether the applicant's HAPRACT selection complies with ARS §49-480.04-County Air Pollution Control-County Program For Control Of Hazardous Air Pollutants and this section of this rule based on the documentation provided in Section 304.2-Case-By-Case HAPRACT Determination of this rule:

a. If the Control Officer finds that the applicant's proposal complies with ARS §49-480.04-County Air Pollution Control-County Program For Control Of Hazardous Air Pollutants and this section of this rule, the Control Officer shall include the applicant's proposed HAPRACT selection in the permit or permit revision.

b. If the Control Officer finds that the applicant's proposal fails to comply with ARS §49-480.04-County Air Pollution Control-County Program For Control Of Hazardous Air Pollutants and this section of this rule, the Control Officer shall:

(1) Notify the applicant that the proposal fails to meet requirements;

(2) Specify the deficiencies in the proposal; and

(3) State that the applicant shall submit a new HAPRACT proposal according to the provisions regarding permit application processing procedures in Rule 210-Title V Permit Provisions or Rule 220-Non-Title V Permit Provisions of these rules.

c. If the applicant does not submit a new proposal, the Control Officer shall deny the application for a permit or permit revision.

d. If the Control Officer finds that the new proposal fails to comply with ARS §49-480.04-County Air Pollution Control-County Program For Control Of Hazardous Air Pollutants and this section of this rule, the Control Officer shall deny the application for a permit or permit revision.

304.4 If the Control Officer finds that a reliable method of measuring HAP emissions is not available, the Control Officer shall require, in the permit, the applicant to comply with a d esign, equipment, work practice or operational standard, or combination of these, but shall not impose a numeric emissions limitation upon the applicant.

304.5 The Control Officer shall not impose a control technology that would require the application of measures that are incompatible with measures required under Rule 370-Federal Hazardous Air Pollutant Program of these rules or 40 CFR Part 63-National Emission Standards For Hazardous Air Pollutants For Source Categories. An applicable control technology for a source or source category that is promulgated by the Administrator shall supersede control technology imposed by the Control Officer for that source or source category.

305 CASE-BY-CASE AZMACT DETERMINATION:

305.1 The applicant shall include in the application sufficient documentation to show that the proposed control technology meets the requirements of ARS §49-480.04-County Air Pollution Control-County Program For Control Of Hazardous Air Pollutants and of this section of this rule.

305.2 An applicant subject to Section 303.3-Modifications; Permits; Permit Revisions of this rule shall propose AZMACT for the new source or modification, to be included in the applicant's permit or permit revision. The applicant shall document each of the following steps:

a. The applicant shall identify all available control options, taking into consideration the measures cited in Section 205-Definition Of Arizona Maximum Achievable Control Technology (AZMACT) of this rule. The analysis shall include a survey of emission sources to determine the most stringent emission limitation currently achieved in practice in the United States. The survey may include technologies employed outside of the United States and may include controls applied through technology transfer to similar source categories and gas streams.

b. The applicant shall eliminate options that are technically infeasible because of source-specific factors. The applicant shall clearly document the demonstration of technical infeasibility and shall base the demonstration upon physical, chemical, and engineering barriers that would preclude the successful use of each control option that the applicant has eliminated.

c. The applicant shall list the remaining control technologies in order of overall removal efficiency for the HAP under review, with the most effective at the top of the list. The list shall include the following information, for the control technology proposed and for any control technology that is ranked higher than the proposed technology:

(1) Estimated control efficiency described by percent of HAP removed;

(2) Expected emission rate in tons per year and pounds per hour;

(3) Expected emission reduction in tons per year and pounds per hour;

(4) Economic impact and cost effectiveness;

(5) Other environmental impact; and

(6) Energy impact.

d. The applicant shall evaluate the most effective controls, listed according to Section 305.2(c)-Case-By-Case AZMACT Determination of this rule and document the results as follows:

(1) For new major sources, the applicant shall consider the factors described in Section 305.2(c)-Case-By-Case AZMACT Determination of this rule to arrive at the final control technology proposed as AZMACT.

(a) The applicant shall discuss the beneficial and adverse economic, environmental, and energy impacts and quantify them where possible, focusing on the direct impacts of each control technology.

(b) If the applicant proposes the top alternative in the list as AZMACT, the applicant shall consider whether other environmental impacts mandate the selection of an alternative control technology. If the applicant does not propose the top alternative as AZMACT, the applicant shall evaluate the next most stringent technology in the list. The applicant shall continue the evaluation process until the applicant arrives at a technology that the applicant does not eliminate because of source-specific, economic, environmental, or energy impacts.

(2) For a modification, the applicant shall evaluate the control technologies according to Section 305.2(d)(1)-Case-By-Case AZMACT Determination of this rule. AZMACT for a modification may be less stringent than AZMACT for a new source in the same source category but shall not be less stringent than:

(a) In cases where the applicant has identified 30 or more sources, the average emission limitation achieved by the best performing 12% of the existing similar sources, which the applicant shall include in the permit application; or

(b) In cases where the applicant has identified fewer than 30 similar sources, the average emission limitation achieved by the best performing five sources, which the applicant shall include in the permit application.

e. The applicant shall propose as AZMACT for the HAP under review:

(1) The most effective control technology or methodology not eliminated in the evaluation described in Section 305.2(d)-Case-By-Case AZMACT Determination of this rule; or

(2) An innovative technology that reduces emissions to the extent achieved by the control technology that the applicant otherwise would have proposed under Section 305.2(e)(1)-Case-By-Case AZMACT Determination of this rule and that meets all the requirements of ARS §49-480.04-County Air Pollution Control-County Program For Control Of Hazardous Air Pollutants and this section of this rule.

305.3 The Control Officer shall not approve a control technology or methodology less stringent than any applicable federal new source performance standard (NSPS) at 40 CFR Part 60 or national emission standard for hazardous air pollutants (NESHAP) at 40 CFR Part 61.

305.4 The Control Officer shall determine whether the applicant's AZMACT proposal complies with ARS §49-480.04-County Air Pollution Control-County Program For Control Of Hazardous Air Pollutants and this section of this rule.

a. If the Control Officer determines that the applicant's proposal complies with ARS §49-480.04-County Air Pollution Control-County Program For Control Of Hazardous Air Pollutants and this section of this rule, the Control Officer shall include the applicant's proposed AZMACT selection in the permit or permit revision.

b. If the Control Officer determines that the applicant's proposal does not comply with ARS §49-480.04-County Air Pollution Control-County Program For Control Of Hazardous Air Pollutants and this section of this rule, the Control Officer shall:

(1) Notify the applicant that the proposal does not meet the requirements;

(2) Specify the deficiencies; and

(3) State that the applicant shall submit a new AZMACT proposal according to permit application processing procedures in Rule 210-Title V Permit Provisions or Rule 220-Non-Title V Permit Provisions of these rules.

c. If the applicant does not submit a new proposal, the Control Officer may deny the application for permit or permit revision.

d. If the Control Officer determines that the new proposal fails to comply with ARS §49-480.04-County Air Pollution Control-County Program For Control Of Hazardous Air Pollutants and this section of this rule, the Control Officer shall deny the application for a permit or permit revision.

305.5 If a reliable method of measuring HAP emissions is not available, the Control Officer shall require the applicant to comply with a design, equipment, work practice, or operational standard, or combination of these, to be included in the applicant's permit, but shall not impose a numeric emissions limitation.

305.6 The Control Officer shall not impose a control technology that would require the application of measures that are incompatible with measures required under Rule 370-Federal Hazardous Air Pollutant Program of these rules or 40 CFR Part 63-National Emission Standards For Hazardous Air Pollutants For Source Categories. An applicable control technology for a source or source category that is promulgated by the Administrator shall supersede control technology imposed by the Control Officer for that source or source category.

306 RISK MANAGEMENT ANALYSES:

306.1 Applicability:

a. An applicant seeking to demonstrate that HAPRACT or AZMACT is not necessary to prevent adverse effects to human health or the environment by conducting a risk management analysis (RMA) shall first apply for a permit or a significant permit revision that complies with Rule 210-Title V Permit Provisions or Rule 220-Non-Title V Permit Provisions of these rules.

b. An applicant seeking to demonstrate that HAPRACT or AZMACT is not necessary to prevent adverse effects to human health or the

environment shall conduct a r isk management analysis (RMA) according to this section of this rule.

c. The risk management analysis (RMA) for a new source shall apply to:

(1) The source's annual total potential to emit Maricopa County HAPs for evaluation of chronic exposure; or

(2) The source's hourly total potential to emit Maricopa County HAPs for evaluation of acute exposure.

d. The risk management analysis (RMA) for a modified source shall apply to:

(1) The source's annual total potential to emit Maricopa County HAPs, after the modification, for evaluation of chronic exposure; or

(2) The source's hourly total potential to emit Maricopa County HAPs, after the modification, for evaluation of acute exposure.

e. An applicant shall conduct a risk management analysis (RMA) for each Maricopa County HAP emitted by the source in greater than de minimis amounts.

306.2 The applicant may use any of the following methods for conducting a risk management analysis (RMA):

a. Tier 1-Equation:

(1) For emissions of a HAP included in a listed group of hazardous compounds, other than those HAPs identified in Table 3-Acute And Chronic Ambient Air Concentrations of this rule as selected compounds, the applicant shall determine a health-based ambient air concentration, under Section 306.3(c)-Risk Management Analyses-Health Based Ambient Air Concentrations Of Maricopa County HAPs of this rule.

(2) The applicant shall determine the potential maximum hourly exposure resulting from emissions of the HAP by applying the following equation: MHE = PPH * 17.68, where:

(a) MHE = maximum hourly exposure in milligrams per cubic meter, and

(b) PPH = hourly potential to emit the HAP in pounds per hour.

(3) The applicant shall determine the potential maximum annual exposure resulting from emissions of the HAP by applying the following equation: MAE = PPY * 1/M OH * 1.41, where:

(a) MAE = maximum annual exposure in milligrams per cubic meter,

(b) PPY = annual potential to emit the HAP in pounds per year, and

(c) MOH = maximum operating hours for the source, taking into account any enforceable operational limitations.

(4) The Control Officer shall not require compliance with HAPRACT for the HAP under Section 304-Case-By-Case HAPRACT Determination of this rule or with AZMACT for the HAP under Section 305-Case-By-Case AZMACT Determination of this rule, if both of the following are true:

(a) The maximum hourly concentration determined under Section 306.2(a)(2)-Risk Management Analyses-Tier 1-Equation of this rule is less than the acute ambient air concentrations determined under Section 306.3(c)-Risk Management Analyses-Health Based Ambient Air Concentrations Of Maricopa County HAPs of this rule; and

(b) The maximum annual concentration determined under Section 306.2(a)(3)-Risk Management Analyses-Tier 1-Equation of this rule is less than the chronic ambient air concentrations determined under Section 306.3(c)-Risk Management Analyses - Health Based Ambient Air Concentrations Of Maricopa County HAPs of this rule.

(5) If either the maximum hourly concentration determined under Section 306.2(a)(2)-Risk Management Analyses-Tier 1-Equation of this rule or the maximum annual concentration determined under Section 306.2(a)(3)-Risk Management Analyses-Tier 1-Equation is greater than or equal to the relevant ambient air concentration:

(a) The Control Officer shall require compliance with HAPRACT under Section 304-Case-By-Case HAPRACT Determination of this rule or with AZMACT under Section 305-Case-By-Case AZMACT Determination of this rule; or

(b) The applicant may use the Tier 2-SCREEN model method under Section 306.2(b) of this rule, the Tier 3-Modified SCREEN Model method under Section 306.2(c) of this rule, or the Tier 4-Modified SCREEN Model Or Refined Air Quality Model method under Section 306.2(d) of this rule for conducting a risk management analysis (RMA) under Section 306-Risk Management Analyses of this rule.

b. Tier 2-SCREEN Model:

(1) The applicant shall use the SCREEN model performed in a manner consistent with the Guideline specified in Rule 240-Permit Requirements For New Major Sources And Major Modifications To Existing Major Sources, Section 308.1(f)(1)-Permit Requirements For Sources Located In Attainment And Unclassifiable Areas-Air Quality Models of these rules. The applicant shall compare the maximum concentration that is predicted in the ambient air with the relevant ambient air concentration determined under Section 306.3-Risk Management Analyses-Health Based Ambient Air Concentrations Of Maricopa County HAPs of this rule.

(2) If the predicted maximum concentration is less than the relevant ambient air concentration, the Control Officer shall not require compliance with HAPRACT under Section 304-Case-By-Case HAPRACT Determination of this rule or AZMACT under Section 305-Case-By-Case AZMACT Determination of this rule.

(3) If the predicted maximum concentration is greater than or equal to the relevant ambient air concentration:

(a) The Control Officer shall require compliance with HAPRACT under Section 304-Case-By-Case HAPRACT Determination of this rule or AZMACT under Section 305-Case-By-Case AZMACT Determination of this rule; or

(b) The applicant may use the Tier 3-Modified SCREEN Model method under Section 306.2(c) of this rule or

the Tier 4-Modified SCREEN Model Or Refined Air Quality Model method under Section 306.2(d) of this rule for determining maximum public exposure to Maricopa County HAPs under Section 306.2(c)-Risk Management Analyses-Tier 3-Modified SCREEN Model of this rule.

c. Tier 3-Modified SCREEN Model:

(1) The applicant shall use the SCREEN model performed in a manner consistent with the Guideline specified in Rule 240-Permit Requirements For New Major Sources And Major Modifications To Existing Major Sources, Section 308.1(f)(1)-Permit Requirements For Sources Located In Attainment And Unclassifiable Areas-Air Quality Models of these rules.

(2) For evaluation of acute exposure, the applicant shall assume exposure in the ambient air.

(3) For evaluation of chronic exposure:

(a) The applicant may use exposure assumptions consistent with institutional or engineering controls that are permanent and enforceable outside the permit.

(b) The applicant shall notify the Control Officer of these controls. If the Control Officer does not approve of the proposed controls or if the controls are not permanent and enforceable outside of the permit, the applicant shall not use the method specified in Section 306.2(c)(3)-Risk Management Analyses-Tier 3-Modified SCREEN Model of this rule to determine maximum public exposure to the Maricopa County HAP.

(4) If the predicted maximum concentration is less than the relevant ambient air concentration, the Control Officer shall not require compliance with HAPRACT under Section 304-Case-By-Case HAPRACT Determination of this rule or AZMACT under Section 305-Case-By-Case AZMACT Determination of this rule.

(5) If the predicted maximum concentration is greater than or equal to the relevant ambient air concentration:

(a) The Control Officer shall require compliance with HAPRACT under Section 304-Case-By-Case HAPRACT Determination of this rule or AZMACT under Section 305-Case-By-Case AZMACT Determination of this rule; or

(b) The applicant may use the Tier 4-Modified SCREEN Model Or Refined Air Quality Model method under Section 306.2(d) of this rule for determining maximum public exposure to Maricopa County HAPs, under Section 306.2(d) of this rule.

d. Tier 4-Modified SCREEN Model Or Refined Air Quality Model:

(1) The applicant shall employ either the SCREEN model or a refined air quality model performed in a manner consistent with the Guideline specified in Rule 240-Permit Requirements For New Major Sources And Major Modifications To Existing Major Sources, Section 308.1(f)(1)-Permit Requirements For Sources Located In Attainment And Unclassifiable Areas-Air Quality Models of these rules.

(2) For evaluation of acute exposure, the applicant shall assume exposure in the ambient air.

(3) For evaluation of chronic exposure:

(a) The applicant may use exposure assumptions consistent with institutional or engineering controls that are permanent and enforceable outside the permit.

(b) The applicant shall notify the Control Officer of these controls. If the Control Officer does not approve of the proposed controls or if the proposed controls are not permanent and enforceable outside of the permit, the applicant shall assume chronic exposure in the ambient air.

(4) The applicant may include in the Tier 4 risk management analysis (RMA) documentation of the following factors:

(a) The estimated actual exposure to the HAP of persons living in the airshed of the source;

(b) Available epidemiological or other health studies;

(c) Risks presented by background concentrations of hazardous air pollutants;

(d) Uncertainties in risk assessment methodology or other health assessment techniques;

(e) Health or environmental consequences from efforts to reduce the risk; or

(f) The technological and commercial availability of control methods beyond those otherwise required for the source and the cost of such methods.

(5) The applicant shall submit a written protocol for conducting a risk management analysis (RMA), consistent with the requirements of Section 306.2(d)-Risk Management Analyses-Tier 4-Modified SCREEN Model Or Refined Air Quality Model of this rule, to the Control Officer for the Control Officer's approval. If the Control Officer does not approve the written protocol, the applicant may:

(a) Submit a revised protocol to the Control Officer;

(b) Propose HAPRACT under Section 304-Case-By-Case HAPRACT Determination of this rule or AZMACT under Section 305-Case-By-Case AZMACT Determination of this rule; or

(c) Refuse to submit a revised protocol, in which case the Control Officer shall deny the application.

(6) If the predicted maximum concentration is less than the relevant ambient air concentration or if warranted under the factors listed in Section 306.2(d)(4)-Risk Management Analyses-Tier 4-Modified SCREEN Model Or Refined Air Quality Model of this rule, the Control Officer shall not require compliance with HAPRACT under Section 304-Case-By-Case HAPRACT Determination of this rule or AZMACT under Section 305-Case-By-Case AZMACT Determination of this rule.

(7) Except as provided in Section 306.2(d)(6)-Risk Management Analyses-Tier 4-Modified SCREEN Model Or Refined Air Quality Model of this rule, if the predicted maximum concentration is greater than or equal to the relevant ambient air concentration, the Control Officer shall require compliance with HAPRACT under Section 304-Case-By-Case

HAPRACT Determination of this rule or AZMACT under Section 305-Case-By-Case AZMACT Determination of this rule.

306.3 Health Based Ambient Air Concentrations Of Maricopa County HAPs:

a. For Maricopa County HAPs for which the Control Officer has already determined an ambient air concentration, the applicant shall use the acute and chronic values listed in Table 3-Acute And Chronic Ambient Air Concentrations of this rule.

Table 3-Acute And Chronic Ambient Air Concentrations

Chemical	Acute Ambient Air Concentrations (mg/m^3)	Chronic Ambient Air Concentrations (mg/m^3)
1,1,1-Trichloroethane (Methyl Chloroform)	2,075	2.30E+00
1,1,2,2-Tetrachloroethane	18	3.27E-05
1,3-Butadiene	7,514	6.32E-05
1,4-Dichlorobenzene	300	3.06E-04
2,2,4-Trimethylpentane	900	NA
2,4-Dinitrotoluene	5.0	2.13E-05
2-Chloroacetophenone	NA	3.13E-05
Acetaldehyde	306	8.62E-04
Acetophenone	25	3.65E-01
Acrolein	0.23	2.09E-05
Acrylonitrile	38	2.79E-05
Antimony Compounds (Selected Compound: Antimony)	13	1.46E-03
Arsenic Compounds (Selected Compound: Arsenic)	2.5	4.41E-07
Benzene	1,276	2.43E-04
Benzyl Chloride	26	3.96E-05
Beryllium Compounds (Selected Compound: Beryllium)	0.013	7.90E-07
Biphenyl	38	1.83E-01
bis (2-Ethylhexy) Phthalate	13	4.80E-04
Bromoform	7.5	1.72E-03
Cadmium Compounds (Selected Compound: Cadmium)	0.25	1.05E-06
Carbon Disulfide	311	7.30E-01
Carbon Tetrachloride	201	1.26E-04
Carbonyl Sulfide	30	NA
Chlorobenzene	1,000	1.04E+00

Chloroform	195	3.58E-04
Chromium Compounds (Selected Compound: Hexavalent Chromium)	0.10	1.58E-07
Cobalt Compounds (Selected Compound: Cobalt)	10	6.86E-07
Cumene	935	4.17E-01
Cyanide Compounds (Selected Compound: Hydrogen Cyanide)	3.9	3.13E-03
Dibenzofurans	25	7.30E-03
Dichloromethane (Methylene Chloride)	347	4.03E-03
Dimethyl Formamide	164	3.13E-02
Dimethyl Sulfate	0.31	NA
Ethyl Benzene	250	1.04E+00
Ethyl Chloride (Chloroethane)	1,250	1.04E+01
Etylene Dibromide (Dibromoethane)	100	3.16E-06
Ethylene Dichloride (1,2-Dichloroethane)	405	7.29E-05
Ethylene Glycol	50	4.17E-01
Ethylidene Dichloride (1,1-Dichloroethane)	6,250	5.21E-01
Formaldehyde	17	1.46E-04
Glycol Ethers (Selected Compound: Diethylene Glycol, Monoethyl Ether)	250	3.14E-03
Hexachlorobenzene	0.50	4.12E-06
Hexane	11,649	2.21E+00
Hydrochloric Acid	16	2.09E-02
Hydrogen Fluoride (Hydrofluoric Acid)	9.8	1.46E-02
Isophorone	13	2.09E+00
Manganese Compounds (Selected Compound: Manganese)	2.5	5.21E-05
Mercury Compounds (Selected Compound: Elemental Mercury)	1.0	3.13E-04
Methanol	943	4.17E+00
Methyl Bromide	261	5.21E-03
Methyl Chloride	1,180	9.39E-02
Methyl Hydrazine	0.43	3.96E-07
Methyl Isobutyl Ketone (Hexone)	500	3.13E+00
Methyl Methacrylate	311	7.30E-01
Methyl Tert-Butyl Ether	1,444	7.40E-03
N, N-Dimethylaniline	25	7.30E-03
Naphthalene	75	5.58E-05
Nickel Compounds (Selected Compound: Nickel Refinery Dust)	5.0	7.90E-06

Phenol	58	2.09E-01
Polychlorinated Biphenyls (Selected Compound: Aroclor 1254)	2.5	1.90E-05
Polycyclic Organic Matter (Selected Compound: Benzo(a)pyrene)	5.0	2.02E-06
Propionaldehyde	403	8.62E-04
Propylene Dichloride	250	4.17E-03
Selenium Compounds (Selected Compound: Selenium)	0.50	1.83E-02
Styrene	554	1.04E+00
Tetrachloroethylene (Perchloroethylene)	814	3.20E-04
Toluene	1,923	5.21E+00
Trichlorethylene	1,450	1.68E-05
Vinyl Acetate	387	2.09E-01
Vinyl Chloride	2,099	2.15E-04
Vinylidene Chloride (1,2-Dichloroethylene)	38	2.09E-01
Xylene (Mixed Isomers)	1,736	1.04E-01

b. For Maricopa County HAPs for which an ambient air concentration has not already been determined, the applicant shall determine the acute and chronic ambient air concentrations according to the process in Appendix H-Procedures For Determining Ambient Air Concentrations For Hazardous Air Pollutants of these rules.

c. For specific compounds included in Maricopa County HAPs listed as a group (e.g., arsenic compounds), the applicant may use an ambient air concentration developed according to the process in Appendix H-Procedures For Determining Ambient Air Concentrations For Hazardous Air Pollutants of these rules.

306.4 As part of the risk management analysis (RMA), an applicant may voluntarily propose emissions limitations under Rule 220-Non-Title V Permit Provisions, Section 304-Permits Containing Voluntarily Accepted Emissions Limitations, Controls, Or Other Requirements (Synthetic Minor) of these rules, in order to avoid being subject to HAPRACT under Section 304-Case-By-Case HAPRACT Determination of this rule or to avoid being subject to AZMACT under Section 305-Case-By-Case AZMACT Determination of this rule.

306.5 Documentation Of Risk Management Analysis (RMA): The applicant shall document each risk management analysis (RMA) performed for each Maricopa County HAP and shall include the following information:

a. The potential maximum public exposure of the Maricopa County HAP;

b. The method used to determine the potential maximum public exposure:

(1) For Tier 1-Equation, the calculation demonstrating that the emissions of the Maricopa County HAP are less than the health-based ambient air concentration, determined under Section 306.3(c)-Risk Management Analyses-Health Based Ambient Air Concentrations Of Maricopa County HAPs of this rule.

(2) For Tier 2-SCREEN Model, the input files to and the results of the SCREEN Modeling.

(3) For Tier 3-Modified SCREEN Model:

(a) The input files to and the results of the SCREEN Modeling; and

(b) The permanent and enforceable institutional or engineering controls approved by the Control Officer under Section 306.2(c)(3)-Risk Management Analyses-Tier 3-Modified SCREEN Model of this rule.

(4) For Tier 4-Modified SCREEN Model Or Refined Air Quality Model:

(a) The model the applicant used;

(b) The input files to and the results of the modeling;

(c) The modeling protocol approved by the Control Officer under Section 306.2(d)(3)-Risk Management Analyses-Tier 4-Modified SCREEN Model Or Refined Air Quality Model of this rule; and

(d) The permanent and enforceable institutional or engineering controls approved by the Control Officer under Section 306.2(d)(5)-Risk Management Analyses-Tier 4-Modified SCREEN Model Or Refined Air Quality Model of this rule;

c. The health-based ambient air concentrations determined under Section 306.3-Risk Management Analyses-Health Based Ambient Air Concentrations Of Maricopa County HAPs of this rule; and

d. Any voluntary emissions limitations that the applicant proposes under Section 306.4-Risk Management Analyses of this rule.

306.6 An applicant may conduct a risk management analysis (RMA) for any alternative operating scenario, requested in the application, consistent with the requirements of Section 306.6-Risk Management Analyses of this rule. The alternative operating scenario may allow a r ange of operating conditions if the Control Officer concludes that the risk management analysis (RMA) demonstrates no adverse effects to human health or adverse environmental effects from operations within that range. Modifications to a source consistent with the alternative operating scenario are not subject to this rule.

SECTION 400 - ADMINISTRATIVE REQUIREMENTS

401 **EFFECTIVE DATE:** The provisions of this rule shall be effective June 6, 2007 and shall not apply to permits or significant permit revisions for which the Control Officer receives the first application component before the effective date of this rule.

402 **PERIODIC REVIEW**:

402.1 Within one year after the Administrator adds or deletes a pollutant to the federal list of hazardous air pollutants, under Section 112(b)(2) or Section 112(b)(3) of the Clean Air Act, the Control Officer shall adopt those revisions for the Maricopa County list of HAPs in Section 301-Maricopa County List Of Hazardous Air Pollutants of this rule, unless the Control Officer finds that there is no scientific evidence to support the revision.

402.2 The Control Officer shall review the Maricopa County list of HAPs and the ambient air concentrations once every three years.

402.3 Based upon the review, the Control Officer may revise:

a. The Maricopa County list of HAPs. The Control Officer shall add any HAP to or delete any HAP from the Maricopa County list of HAPs in Section 301-Maricopa County List Of Hazardous Air Pollutants of this rule according to Section 112(b)(1) of the Act (42 U.S.C. 7412(b)(1)).

b. The acute and chronic health-based ambient air concentrations for Maricopa County HAPs; and

c. The acute and chronic de minimis levels for Maricopa County HAPs.

d. The list of included minor source categories in Section 102-Applicability of this rule.

SECTION 500 – MONITORING AND RECORDS (NOT APPLICABLE)

REGULATION IV - THE HEARING BOARD

RULE 400
PROCEDURE BEFORE THE HEARING BOARD

INDEX

SECTION 100 - GENERAL

101 PURPOSE

SECTION 200 - DEFINITIONS

201 HEARING BOARD

SECTION 300 - STANDARDS (NOT INCLUDED)

SECTION 400 - ADMINISTRATIVE REQUIREMENTS

401 HEARING ON ORDER OF ABATEMENT

402 ACTION ON VIOLATION

403 DECISIONS OF HEARING BOARD

404 APPEALS TO THE HEARING BOARD

405 SUBPOENAS

406 EFFECTIVE DATE OF DECISIONS

407 AUTHORITY TO REVOKE

408 PUBLICATION OF HEARING

409 SERVICE OF NOTICE

SECTION 500 - MONITORING AND RECORDS (NOT INCLUDED)

Revised 07/13/88
Repealed and Adopted 11/15/93

MARICOPA COUNTY
AIR POLLUTION CONTROL REGULATIONS

REGULATION IV - THE HEARING BOARD

RULE 400
PROCEDURE BEFORE THE HEARING BOARD

SECTION 100 - GENERAL

101 PURPOSE: To prescribe procedures that shall apply to all hearings before the hearing board.

SECTION 200 - DEFINITIONS: For the purpose of this rule the following definition shall apply:

201 HEARING BOARD - The Maricopa County Air Pollution Control Hearing Board appointed by the Maricopa County Board of Supervisors.

SECTION 400 - ADMINISTRATIVE REQUIREMENTS

401 HEARING ON ORDER OF ABATEMENT: An order of abatement issued by the Control Officer shall become effective immediately upon the expiration of the time during which a request for a hearing may be made pursuant to ARS§49-511, unless the person or persons named in said order shall have made a timely request for a hearing before the hearing board. If a hearing is requested, the hearing board shall hold the hearing within 30 days from receipt of the request unless said time is extended by the hearing board. Written notice of the time and place of the hearing shall be sent by the hearing board by registered or certified mail to the person or persons requesting the hearing and to the Control Officer at least 15 days before the hearing. (ARS§49-490)

402 ACTION ON VIOLATION: If the hearing board, after the hearing, determines that the act or acts set forth in the order constitute a violation of any provision of these rules or any requirement of a permit or conditional order issued pursuant to these rules and that no conditional order is justified, the hearing board shall affirm or modify the order for abatement. The order may be conditional and require a person to refrain from the particular act or acts unless certain conditions are met. (ARS§49-490)

403 DECISIONS OF HEARING BOARD: All decisions of the hearing board, including the majority opinion and all concurring and dissenting opinions, shall be

in writing, shall be of public record, and shall be kept in the offices of the Division of Air Pollution Control. A majority of the total membership of the hearing board shall concur in a decision for it to have effect. (ARS§49-496)

404 APPEALS TO THE HEARING BOARD: Within 30 days after notice is given by the Control Officer of approval or denial or revocation of a permit, permit revision, or conditional order, the applicant and any person who filed a comment on the permit, permit revision, or conditional order, may petition the hearing board, in writing, for a public hearing, which shall be held within 30 days after receipt of the petition. The hearing board, after notice and a public hearing, may sustain, modify or reverse the action of the Control Officer. (ARS§49-482)

405 SUBPOENAS: The Chairperson, or in the absence of the Chairperson, the Vice Chairperson may issue subpoenas to compel attendance of any person at hearings and require the production of books, records, and other documents material to a hearing. Obedience to subpoenas may be enforced pursuant to ARS§12-2212. (ARS§49-496)

406 EFFECTIVE DATE OF DECISIONS: Decisions of the hearing board shall become effective not less than 30 days after they are issued unless a rehearing is granted which shall have the effect of staying the decision, or it is determined that an emergency exists which justifies an earlier effective date. (ARS§49-496)

407 AUTHORITY TO REVOKE: The hearing board may revoke or modify an order of abatement, or a permit revision only after first holding a hearing within 30 days from the giving of notice of such hearing. (ARS§49-498)

408 PUBLICATION OF HEARING: Any notice of hearing required by these rules shall be given by publication of a notice of hearing at least two times in a newspaper of general circulation published in the county concerned, or if there is no such newspaper published in the county, in a newspaper of general circulation published in an adjoining county, and by posting copies of the petition and notice in at least three conspicuous places in the county. (ARS§49-498)

409 SERVICE OF NOTICE: If the hearing involves any violation of these rules or a conditional order issued pursuant thereto, then in addition to the requirements of Section 409 of this rule, the person allegedly committing or having committed the violation or requesting the conditional order shall be served personally or by registered mail or certified mail at least 15 days prior to the hearing with a written notice of hearing. (ARS§ 49-498)

Last Formatted - Fall 1997

REGULATION V - AIR QUALITY STANDARDS AND AREA CLASSIFICATION
RULE 500
ATTAINMENT AREA CLASSIFICATION

INDEX

SECTION 100 - GENERAL

101 PURPOSE

SECTION 200 - DEFINITIONS (NOT APPLICABLE)

SEE RULE 100 (GENERAL PROVISIONS AND DEFINITIONS) OF THESE RULES FOR DEFINITIONS OF TERMS THAT ARE USED BUT NOT SPECIFICALLY DEFINED IN THIS RULE

SECTION 300 - STANDARDS

301 CLASSIFICATION AND REDESIGNATION OF ATTAINMENT AREAS

302 LIMITATION OF POLLUTANTS IN CLASSIFIED ATTAINMENT AREAS

SECTION 400 - ADMINISTRATIVE REQUIREMENTS (NOT APPLICABLE)

SECTION 500 - MONITORING AND RECORDS (NOT APPLICABLE)

Revised 07/13/88
Repealed and Adopted 11/15/93
Revised 07/26/00

MARICOPA COUNTY
AIR POLLUTION CONTROL REGULATIONS
REGULATION V - AIR QUALITY STANDARDS AND AREA CLASSIFICATION

RULE 500
ATTAINMENT AREA CLASSIFICATION

SECTION 100 - GENERAL

101 PURPOSE: To set forth the criteria used to classify attainment areas and pollution standards for attainment areas.

SECTION 200 - DEFINITIONS (NOT APPLICABLE)

See Rule 100 (General Provisions And Definitions) of these rules for definitions of terms that are used but not specifically defined in this rule.

SECTION 300 - STANDARDS

301 CLASSIFICATION AND REDESIGNATION OF ATTAINMENT AREAS: All attainment and unclassified areas or parts thereof shall be classified as either Class I, Class II or Class III.

301.1 Class I Areas: All of the following areas which were in existence on August 7, 1977, including any boundary changes to those areas which occurred subsequent to the date of enactment of the Clean Air Act Amendments of 1977 and before March 12, 1993, shall be Class I areas irrespective of attainment status and shall not be redesignated:

a. International parks;

b. National wilderness areas which exceed 5,000 acres in size;

c. National parks which exceed 6,000 acres in size;

d. National memorial parks which exceed 5,000 acres in size;

301.2 Class I or Class II Areas:

a. The following areas shall be designated only as Class I or Class II:

(1) An area, which, as of August 7, 1977, exceeds 10,000 acres in size and is a national monument, a national primitive area, a national preserve, a national recreational area, a national wild and scenic river, a national wildlife refuge, or a national lakeshore or seashore.

(2) A national park or national wilderness area established after August 7, 1977, which exceeds 10,000 acres in size.

b. All other areas, other than those areas described in subsection 301.2(a) of this rule, shall be Class II areas, unless redesignated under subsection 301.3 of this rule or subsection 301.4 of this rule.

301.3 Redesignation As Class I Area Or Class II Area: The Control Officer may request the Governor or the Governor's designee to redesignate areas of the state as Class I or Class II, provided that the following requirements are fulfilled:

a. At least 1 public hearing is held in or near the area affected.

b. Other states, Indian governing bodies, and Federal Land Managers whose land may be affected by the proposed redesignation are notified at least 30 days prior to the public hearing.

c. A discussion document of the reasons for the proposed redesignation, including a description and analysis of health, environmental, economic, social, and energy effects of the proposed redesignation, is prepared by the Governor or the Governor's designee. The discussion document shall be made available for public inspection at least 30 days prior to the hearing and the notice announcing the hearing shall contain appropriate notification of the availability of such discussion document.

d. Prior to the issuance of notice respecting the redesignation of an area which includes any Federal lands, the Governor or the Governor's designee has provided written notice to the appropriate Federal Land Manager and afforded the Federal Land Manager adequate opportunity, not in excess of 60 days, to confer with the state respecting the redesignation and to submit written comments and recommendations. The Governor or the Governor's designee shall publish a list of any inconsistency between such redesignation and such recommendations, together with the reasons for making such redesignation against the recommendation of the Federal Land Manager, if any Federal Land Manager has submitted written comments and recommendations.

e. The redesignation is proposed after consultation with the elected leadership of local governments in the area covered by the proposed redesignation.

f. The redesignation is submitted to the Administrator of the Environmental Protection Agency (EPA) as a revision to the State Implementation Plan (SIP).

g. A redesignation shall not be effective until approved by the Administrator of EPA as part of an applicable implementation plan.

h. Lands within the exterior boundaries of Indian reservations may be redesignated only by the appropriate Indian governing body.

301.4 Redesignation As Class III Area: The Control Officer may request the Governor or the Governor's designee to redesignate areas of the state as Class III, if all of the following criteria are met:

a. Such redesignation meets the requirements of subsection 301.3 of this rule.

b. Such redesignation has been approved after consultation with the appropriate committee of the legislature if it is in session or with the leadership of the legislature if it is not in session.

c. The general purpose units of local government representing a majority of the residents of the area to be redesignated concur in the redesignation.

d. Such redesignation shall not cause, or contribute to, concentration of any air pollutant which exceeds any maximum allowable increase or maximum allowable concentration permitted under the classification of any area.

e. For any new major source, as defined in Rule 240, Section 210 of these rules, or for a major modification of such source which may be permitted to be constructed and operated only if the area in question is redesignated as Class III, any permit application or related materials shall be made available for public inspection prior to a public hearing.

f. The redesignation is submitted to the Administrator of EPA as a revision to the SIP.

g. A redesignation shall not be effective until approved by the Administrator of EPA as part of an applicable implementation plan.

h. Lands within the exterior boundaries of Indian reservations may be redesignated only by the appropriate Indian governing body.

302 LIMITATION OF POLLUTANTS IN CLASSIFIED ATTAINMENT AREAS:

302.1 Areas designated in Class I, II or III shall be limited to the following increases in air pollutant concentrations occurring over the baseline concentration, provided that for any period other than an annual period, the applicable maximum allowable increase may be exceeded once per year at any one location:

POLLUTION INCREASE LIMITS IN ATTAINMENT AREAS

	Maximum Allowable Increase (micrograms per cubic meter)
CLASS I	
Particulate matter - PM_{10}:	
Annual arithmetic mean	4
24-hour maximum	8
Sulfur dioxide:	
Annual arithmetic mean	2
24-hour maximum	5
3-hour maximum	25
Nitrogen dioxide:	
Annual arithmetic mean	2.5
CLASS II	
Particulate matter - PM_{10}:	
Annual arithmetic mean	17
24-hour maximum	30
Sulfur dioxide:	
Annual arithmetic mean	20
24-hour maximum	91
3-hour maximum	512
Nitrogen dioxide:	
Annual arithmetic mean	25
CLASS III	
Particulate matter - PM_{10}:	
Annual arithmetic mean	34
24-hour maximum	60
Sulfur dioxide:	
Annual arithmetic mean	40
24-hour maximum	182
3-hour maximum	700
Nitrogen dioxide:	
Annual arithmetic mean	50

302.2 The baseline concentration shall be that ambient concentration level which exists in the baseline area at the time of the applicable minor source baseline date.

a. The major source baseline date is:

(1) January 6, 1975, for sulfur dioxide and particulate matter; and

(2) February 8, 1988, for nitrogen dioxide.

b. The minor source baseline date shall be the earliest date after August 7, 1977, for sulfur dioxide and particulate matter and February 8, 1988, for nitrogen dioxide, that either:

(1) A major source, as defined in Rule 240, Section 210 of these rules, or a major modification submits a complete permit application to the Administrator of EPA under 40 CFR 52.21; or

(2) A major source, as defined in Rule 240, Section 210 of these rules, or a major modification submits a complete permit application to the Control Officer under Rules 200, 210, 240, 245, and 270 of these rules.

c. A baseline concentration shall be determined for each pollutant for which there is a minor source baseline date and shall include both:

(1) The actual emissions representative of sources in existence on the minor source baseline date, except as provided in subsection 302.2(d) of this rule; and

(2) The allowable emissions of major sources, as defined in Rule 240, Section 210 of these rules, which commenced construction before the major source baseline date, but were not in operation by the applicable minor source baseline date.

d. The following shall not be included in the baseline concentration and shall affect the applicable maximum allowable increase:

(1) Actual emissions from any major source, as defined in Rule 240, Section 210 of these rules, on which construction commenced after the major source baseline date; and

(2) Actual emissions increases and decreases at any stationary source occurring after the minor source baseline date.

302.3 The baseline date shall be established for each pollutant for which maximum allowable increases or other equivalent measures have been established if both:

a. The area in which the proposed source or modification would construct is designated as attainment or unclassifiable for the pollutant on the date of its complete application under either subsections 302.2(b)(1) or 302.2(b)(2) of this rule; and

b. In the case of a major source, as defined in Rule 240, Section 210 of these rules, the pollutant would be emitted in significant

amounts, or in the case of a major modification, there would be a significant net emissions increase of the pollutant.

302.4 The baseline area shall be any area, with any intrastate area designated as attainment or unclassifiable, in which the major source, as defined in Rule 240, Section 210 of these rules, or a major modification establishing the minor source baseline date would construct or would have an air quality impact equal to or greater than 1 ug/m³ (annual average) of the pollutant for which the minor source baseline date is established. Area redesignation under Section 301 of this rule cannot intersect nor be smaller than the area of impact of any new major source, as defined in Rule 240, Section 210 of these rules, or a major modification which either:

a. Establishes a minor source baseline date; or

b. Is subject to either 40 CFR 52.21 or Rule 240, Section 308 of these rules and would be constructed in Arizona.

302.5 The maximum allowable concentration of any air pollutant in any area to which subsection 302.1 of this rule applies shall not exceed a concentration for each pollutant equal to the concentration permitted under the Maricopa County Ambient Air Quality Standards contained in Rule 510 of these rules.

302.6 For the purposes of determining compliance with the maximum allowable increases in ambient concentrations of an air pollutant, the following concentrations of such pollutant shall not be taken into account:

a. Concentration of such pollutant attributable to the increase in emissions from major and stationary sources which have converted from the use of petroleum products, or natural gas, or both, by reason of a natural gas curtailment order which is in effect under the provisions of Sections 2(a) and (b) of the Energy Supply and Environmental Coordination Act of 1974, 15 U.S.C. 792, over the emissions from such sources before the effective date of such order;

b. The concentration of such pollutant attributable to the increase in emissions from major and stationary sources which have converted from using gas by reason of a natural gas curtailment plan in effect under the Federal Power Act, 16 U.S.C. 792 - 825r, over the emissions from such sources before the effective date of the natural gas curtailment plan;

c. Concentrations of particulate matter attributable to the increase in emissions from construction or other temporary activities of a new or altered source;

d. The increase in concentrations attributable to new sources outside the United States over the concentrations attributable to existing sources which are included in the baseline concentration; and

e. Concentrations attributable to the temporary increase in emissions of sulfur dioxide, nitrogen oxides or particulate matter from major sources, as defined in Rule 240, Section 210 of these rules, when the following conditions are met:

(1) The permit issued to such sources specifies the time period during which the temporary emissions increase of sulfur dioxide, nitrogen oxides or particulate matter would occur. Such time period shall not be renewable and shall not exceed 2 years unless a longer period is specifically approved by the Control Officer.

(2) No emissions increase shall be approved which would either:

(a) Impact any portion of any Class I area or any portion of any other area where an applicable incremental ambient standard is known to be violated in that portion; or

(b) Cause or contribute to the violation of a state ambient air quality standard.

(3) The permit issued to such sources specifies that at the end of the time period described in subsection 302.6(e)(1) of this rule, the emissions levels from the sources would not exceed the levels occurring before the temporary emissions increase was approved.

f. The exception granted with respect to increment consumption under subsections 302.6(a) and 302.6(b) of this rule shall not apply more than 5 years after the effective date of the order or natural gas curtailment plan on which the exception is based.

302.7 If the Control Officer determines that the SIP is substantially inadequate to prevent significant deterioration, or that an applicable maximum allowable increase as specified in subsection 302.1 of this rule is being violated, the Control Officer shall submit to the Director a proposal to revise the SIP to correct the inadequacy or the violation. The SIP shall be revised within 60 days of such a finding by the Director, or within 60 days following notification by the Control Officer or the Administrator of EPA, or by such later date as prescribed by the Administrator of EPA after consultation with the Director.

302.8 The Control Officer shall review the adequacy of the SIP on a periodic basis and within 60 days of such time as information becomes available that an applicable maximum allowable increase is being violated.

SECTION 400 - ADMINISTRATIVE REQUIREMENTS (NOT APPLICABLE)

SECTION 500 - MONITORING AND RECORDS (NOT APPLICABLE)

REGULATION V - AIR QUALITY STANDARDS AND AREA CLASSIFICATION

RULE 510
AIR QUALITY STANDARDS

INDEX

SECTION 100 - GENERAL

101 PURPOSE

102 AVAILABILITY OF INFORMATION

SECTION 200 - DEFINITIONS

201 PRIMARY AMBIENT AIR QUALITY STANDARDS

202 SECONDARY AMBIENT AIR QUALITY STANDARDS

SECTION 300 - STANDARDS

301 PARTICULATE MATTER - 2.5 MICRONS OR LESS ($PM_{2.5}$)

302 PARTICULATE MATTER - 10 MICRONS OR LESS (PM_{10})

303 SULFUR OXIDES (SULFUR DIOXIDE)

304 OZONE

305 CARBON MONOXIDE

306 NITROGEN DIOXIDE

307 LEAD

308 POLLUTANT CONCENTRATION DETERMINATIONS

309 ADDITIONAL REQUIREMENTS

310 INCORPORATIONS BY REFERENCE

SECTION 400 - ADMINISTRATIVE REQUIREMENTS

401 REPORTING OF AMBIENT AIR QUALITY MONITORING DATA

SECTION 500 - MONITORING AND RECORDS (NOT APPLICABLE)

Revised 07/13/88
Revised 11/01/06

MARICOPA COUNTY
AIR POLLUTION CONTROL REGULATIONS

REGULATION V - AIR QUALITY STANDARDS AND AREA CLASSIFICATION

RULE 510
AIR QUALITY STANDARDS

SECTION 100 - GENERAL

101 PURPOSE: To establish maximum limiting levels for pollutants existing in the ambient air which are necessary to protect human health and public welfare.

102 AVAILABILITY OF INFORMATION: Copies of materials referenced in Sections 310, 401.1, and 401.2 of this rule are available at 1001 North Central Avenue, Suite 400, Phoenix, AZ, 85004 or call (602) 506-6010.

SECTION 200 - DEFINITIONS: See Rule 100 (General Provisions And Definitions) of these rules for definitions of terms that are used but not specifically defined in this rule. For the purpose of this rule, the following definitions shall apply:

201 PRIMARY AMBIENT AIR QUALITY STANDARDS - The ambient air quality standards which define levels of air quality necessary, with an adequate margin of safety, to protect the public health, as determined by the Arizona Department of Environmental Quality and United States Environmental Protection Agency, and specified in this rule.

202 SECONDARY AMBIENT AIR QUALITY STANDARDS - The ambient air quality standards which define levels of air quality necessary to protect the public welfare from any known or anticipated adverse effects of a p ollutant, as determined by the Arizona Department of Environmental Quality and United States Environmental Protection Agency, and specified in this rule.

SECTION 300 - STANDARDS: The following are established as the primary and secondary ambient air quality standards for Maricopa County:

301 PARTICULATE MATTER - 2.5 MICRONS OR LESS ($PM_{2.5}$):

301.1 Primary and Secondary Ambient Air Quality Standards for $PM_{2.5}$ Annual Arithmetic Mean Concentration: The annual arithmetic mean concentration shall be 15 micrograms per cubic meter ($\mu g/m^3$). The standard shall be considered attained when the annual arithmetic

mean concentration, as determined in accordance with 40 CF R 50, Appendix N, is less than or equal to 15 μg/m^3.

301.2 Primary and Secondary Ambient Air Quality Standards for $PM_{2.5}$ 24-hour Average Concentration: The 24-hour average concentration shall be 65 μg/m^3. The standard shall be considered attained when the 98th percentile 24-hour concentration, as determined in accordance with 40 CFR 50, Appendix N, is less than or equal to 65 μg/m^3.

302 PARTICULATE MATTER - 10 MICRONS OR LESS (PM_{10}):

302.1 Primary and Secondary Ambient Air Quality Standards for PM_{10} Annual Arithmetic Mean Concentration: The annual arithmetic mean concentration shall be 50 μg/m^3. The standard shall be considered attained when the expected annual arithmetic mean concentration, as determined in accordance with 40 CFR 50, Appendix K, is less than or equal to 50 μg/m^3.

302.2 Primary and Secondary Ambient Air Quality Standards for PM_{10} 24-hour Average Concentration: The 24-hour average concentration shall be 150 μg/m^3. This concentration shall not be exceeded more than once per calendar year at any one location. The standard shall be considered attained when the expected number of days per calendar year with a 24-hour average concentration above 150 μg/m^3, as determined in accordance with 40 CFR 50, Appendix K, is less than or equal to 1.

303 SULFUR OXIDES (SULFUR DIOXIDE):

303.1 Primary Ambient Air Quality Standards for Sulfur Oxides (Measured as Sulfur Dioxide):

a. Annual Arithmetic Mean Concentration: The annual arithmetic mean concentration shall be 0.030 parts per million (ppm) (80 μg/m^3). This concentration shall not be exceeded in a calendar year. The annual arithmetic mean shall be rounded to three decimal places (fractional parts equal to or greater than 0.0005 ppm shall be rounded up).

b. 24-hour Concentration: The maximum 24-hour concentration shall be 0.14 ppm (365 μg/m^3). This concentration shall not be exceeded more than once per calendar year at any one location. The 24-hour averages shall be determined from successive nonoverlapping 24-hour blocks starting at midnight each calendar day and shall be rounded to two decimal places (fractional parts equal to or greater than 0.005 ppm shall be rounded up).

303.2 Secondary Ambient Air Quality Standard for Sulfur Oxides (Measured as Sulfur Dioxide) 3-Hour Concentration: The maximum 3-hour concentration shall be 0.5 ppm (1300 μg/m^3). This

concentration shall not be exceeded more than once per calendar year at any one location. The 3-hour averages shall be determined from successive nonoverlapping 3-hour blocks starting at midnight each calendar day and shall be rounded to 1 decimal place (fractional parts equal to or greater than 0.05 ppm shall be rounded up).

304 OZONE:

Primary and Secondary Ambient Air Quality Standards for Ozone Eight-hour Average Concentration: The daily maximum eight-hour average concentration shall be 0.08 ppm. The standard shall be considered attained at an ambient air quality monitoring site when the average of the annual fourth-highest daily maximum eight-hour average ozone concentration, as determined in accordance with 40 CFR 50, Appendix I, is less than or equal to 0.08 ppm.

305 CARBON MONOXIDE:

305.1 Primary Ambient Air Quality Standards for Carbon Monoxide:

a. **One-hour Average Concentration:** The maximum one-hour average concentration shall be 35 p pm (40 mg/m^3). T his concentration shall not be exceeded more than once per year at any one location.

b. **Eight-hour Average Concentration:** The maximum eight-hour average concentration shall be 9 ppm (10 mg/m^3). This concentration shall not be exceeded more than once per year at any one location. An eight-hour average shall be considered valid if at least 75% of the hourly averages for the eight-hour period are available. In the event that only six or seven hourly averages are available, the eight-hour average shall be computed on the basis of the hours available using 6 or 7 as the divisor.

305.2 When summarizing data for comparison with the standards, averages shall be stated to one decimal place. Co mparison of the data with the levels of the standards in ppm shall be made in terms of integers with fractional parts of 0.5 or greater rounding up.

306 NITROGEN DIOXIDE:

Primary and Secondary Ambient Air Quality Standards for Nitrogen Dioxide Annual Arithmetic Mean Concentration: The annual arithmetic mean concentration shall be 0.053 ppm (100 µg/m^3). The standard shall be considered attained when the annual arithmetic mean concentration in a calendar year is less than or equal to 0.053 ppm, rounded to three decimal places, with fractional parts equal to or greater than 0.0005 ppm rounded up. To demonstrate attainment, an annual mean shall be based upon hourly data

that is at least 75% complete, or upon data derived from manual methods that is at least 75% complete for the scheduled sampling days in each calendar quarter.

307 LEAD:

Primary and Secondary Ambient Air Quality Standards for Lead Quarterly Maximum Arithmetic Mean Concentration: The maximum arithmetic mean concentration for lead and its compounds, measured as elemental lead, shall be 1.5 $\mu g/m^3$, as averaged over a calendar quarter.

308 POLLUTANT CONCENTRATION DETERMINATIONS: Pollutant concentrations shall be measured by the following methods:

308.1 Appendices to 40 CFR 50: Pollutant concentrations shall be measured by the following appendices to 40 CFR 50:

Pollutant	40 CFR 50
Particulate Matter ($PM_{2.5}$)	Appendix L
Particulate Matter (PM_{10})	Appendix J
Sulfur Oxides (Sulfur Dioxide)	Appendix A
Ozone	Appendix D
Carbon Monoxide	Appendix C
Nitrogen Dioxide	Appendix F
Lead	Appendix G

308.2 Reference or Equivalent Methods: Pollutant concentrations shall also be measured by:

a. A method of measurement that has been designated as a reference or equivalent method by the Administrator acting pursuant to 40 CFR 53; or

b. A method of measurement that, though not designated as a reference or equivalent method, has been approved for use by the Administrator acting pursuant to 40 CFR 58, Appendix C. Such method shall be subject to any restrictions placed on its use by the Administrator.

308.3 Method Withdrawal: The cancellation or supersession of designation of a reference or equivalent method by the Administrator acting pursuant to 40 CFR 53.11 or 53.16, shall also amount to a withdrawal of the authorization for use of that method for purposes of this regulation.

309 ADDITIONAL REQUIREMENTS:

309.1 Quality assurance, monitor siting, and sample probe installation procedures shall be in accordance with the procedures described in the Appendices to 40 CFR 58.

309.2 Unless otherwise specified, interpretation of all ambient air quality standards contained in this rule shall be in accordance with 40 CFR 50.

309.3 The evaluation of air quality data in terms of procedure, methodology, and concept is to be consistent with methods described in 40 CFR 50.

310 INCORPORATIONS BY REFERENCE: The CFR references listed below are incorporated by reference in Appendix G of these rules:
40 CFR 50;
40 CFR 50, Appendices A through N;
40 CFR 53;
40 CFR 58.26 and 40 CFR 58.50; and
40 CFR 58, all appendices.

SECTION 400 - ADMINISTRATIVE REQUIREMENTS

401 REPORTING OF AMBIENT AIR QUALITY MONITORING DATA:

401.1 Annual Air Quality Monitoring Report: The Control Officer shall submit to the Administrator an annual summary report that at a minimum meets the requirements of 40 CFR 58.26 and 40 CFR 58, Appendix F. The annual report will be made available to the public at the address listed in Section 102 of this rule.

401.2 Daily Air Quality Index (AQI) Report: The Control Officer shall report to the general public an AQI that at a minimum meets the requirements of 40 CFR 58.50 and 40 CFR 58, Appendix G. The AQI will also be made available to the public at the address listed in Section 102 of this rule.

SECTION 500 - MONITORING AND RECORDS (NOT APPLICABLE)

REGULATION VI - EMERGENCY EPISODES

RULE 600
EMERGENCY EPISODES

INDEX

SECTION 100 - GENERAL

101 PURPOSE

102 EPISODE PROCEDURES GUIDELINES

SECTION 200 - DEFINITIONS

201 EMERGENCY EPISODE PLAN

SECTION 300 - STANDARDS

301 EPISODE LEVEL CRITERIA

302 CONTROL ACTIONS

SECTION 400 - ADMINISTRATIVE REQUIREMENTS

401 EPISODE TERMINATION

402 COORDINATION WITH THE STATE DEPARTMENT OF ENVIRONMENTAL QUALITY

SECTION 500 - MONITORING AND RECORDS (NOT INCLUDED)

Revised 07/13/88

MARICOPA COUNTY
AIR POLLUTION CONTROL REGULATIONS

REGULATION VI - EMERGENCY EPISODES

RULE 600
EMERGENCY EPISODES

SECTION 100 - GENERAL

101 PURPOSE: To establish criteria used to determine air pollution emergency episodes and the appropriate control actions. This rule describes control and advisory procedures reached at each of the three episode levels.

102 EPISODE PROCEDURES GUIDELINES: Guidelines for the procedures and communication steps to be followed during an air pollution episode are presented in Appendices D and E of the Arizona Air Pollution Control Implementation Plan.

SECTION 200 - DEFINITIONS:

For the purpose of this rule, the following definition shall apply:

201 EMERGENCY EPISODE PLAN - A system designed to reduce the levels of air contaminants which may reach or have reached the level which may be harmful to health, and to protect that portion of the population at risk.

SECTION 300 - STANDARDS

301 EPISODE LEVEL CRITERIA: An air pollution alert, warning or emergency shall be declared when the following air pollutant concentrations are exceeded at any monitoring site and when meteorological conditions indicate that there will be a recurrence of those concentrations for the same pollutant(s) during the subsequent 24-hour period:

EPISODE LEVEL CRITERIA

Pollutant	Averaging Time	Alert	Warning	Emergency
Sulfur Dioxide (ug/m^3)	24-hr	800	1,600	2,100

Pollutant	Averaging Time	Alert	Warning	Emergency
Small Particulates	24-hr	350	420	500

(PM_{10}) (ug/m^3)				
Total Particulates (ug/m^3)	24-hr	375	625	875
Sulfur Dioxide and Particulates Combined (ug/m^3)	24-hr	$6.5x10^4$	$26.1x10^4$	$39.3x10^4$
Ozone (ug/m^3)	1-hr	400 (0.2ppm)	800 (0.4ppm)	1,000 (0.5ppm)
Nitrogen Dioxide (ug/m^3)	1-hr 24-hr	1,130 282	2,260 565	3,000 750
Carbon Monoxide mg/m^3	8-hr	17 (15 ppm)	34 (20 ppm)	46 (40 ppm)

302 CONTROL ACTIONS: When an air pollution alert, warning or emergency has been declared, one or more of the control actions as applicable to the source emitting the pollutant of concern shall be implemented in the affected area.

302.1 Control Actions - Air Pollution Alert

a. All permits to burn shall be suspended until further notice. The forest service shall be notified to postpone slash burning in affected areas.

b. Incineration shall be limited to the hours of 12 noon to 4:00 p.m.

c. Those manufacturing facilities with prearranged emission reduction plans as noted in the State Air Pollution Control Implementation Plan shall be notified to initiate alert stage control actions. Other sources shall be notified to minimize emissions by curtailing or deferring operations not on a required schedule and by maximizing the collection efficiency of control equipment. Emissions from batch operations shall be limited to the hours of 12 noon to 4:00 p.m.

d. The public shall be requested to voluntarily eliminate all unnecessary usage of motor vehicles.

302.2 Control Actions - Air Pollution Warning

a. Burning of refuse, vegetation, trade wastes, and debris shall not be permitted by any person.

b. Use of incinerators shall be prohibited.

c. Those manufacturing facilities with prearranged emission reduction plans as noted in the Arizona Air Pollution Control Implementation Plan shall be notified to initiate warning stage control actions. Other sources shall be notified to initiate a 40 percent or greater reduction in emissions by curtailment or cessation of operations. All processing industries shall be requested to effect a maximum reduction in heat load demands.

d. If possible, power plant generating loads shall be transferred outside the affected area. Power plant production shall be reduced by purchase of available energy from neighboring utilities.

e. Highway construction and paving activities shall be halted. All soil removal or grading operations at other construction sites shall be postponed.

f. Dust producing crop preparation and cultivation activities shall be postponed. A maximum reduction in agricultural processing and handling operations shall be effected.

g. The public shall be requested to voluntarily reduce motor vehicle usage by use of carpools and other means of transportation and elimination of unnecessary operation.

302.3 Control Actions - Air Pollution Emergency

a. Those manufacturing facilities with prearranged emission reduction plans as noted in the Arizona Air Pollution Control Implementation Plan shall be notified to initiate emergency stage control actions. Other manufacturing establishments shall cease operations as directed by the Governor.

b. As directed by the Governor, all commercial, governmental, and institutional establishments, except those vital for public safety and welfare and enforcement of the emergency episode control actions, shall be closed.

c. Generating loads at power plants shall be reduced further, resulting from industrial and commercial cutbacks.

d. All construction shall be halted as directed by the Governor except that which must proceed to avoid emergent physical harm.

e. As directed by the Governor, use of motor vehicles shall be prohibited except in emergencies with approval of the local police.

SECTION 400 - ADMINISTRATIVE REQUIREMENTS

401 EPISODE TERMINATION: Once declared, any status reached by application of these criteria shall remain in effect until the criteria for that level are no longer met. At such time, the next lower status will be assumed.

402 COORDINATION WITH THE STATE DEPARTMENT OF ENVIRONMENTAL QUALITY: When the conditions justifying the proclamation of an air pollution alert, warning, or emergency are determined to exist in any place in Maricopa County, the Control Officer shall be guided by the following criteria as established by state regulation R18-2-219, and cooperate directly with the State Director, Arizona Department of Environmental Quality in all pertinent areas of control and surveillance.

402.1 If the average wind speed for 24 hours is greater than 9.0 miles per hour, the criteria levels for particulates and sulfur dioxide and particulates combined shall not apply and no source control actions shall be taken.

402.2 If, after an alert or warning episode level has been declared, and air pollution concentrations and meteorological conditions do not deteriorate further, or improve after 48 hours and control actions have been taken, the next higher episode shall be declared and its associated control actions implemented.

Last Formatted - Fall 1997

MARICOPA COUNTY ORDINANCE

P–21
VEHICLE IDLING RESTRICTION

INDEX

B. APPLICABILITY

SECTION 1 - GENERAL

A. PURPOSE

SECTION 2 - DEFINITIONS

A. COMBINATION OF DEVICES
B. DISTRIBUTION CENTER
C. GROSS VEHICLE WEIGHT RATING
D. IDLING
E. POWER TAKE OFF (PTO) MECHANISM
F. PRIMARY PROPULSION ENGINE
G. TRUCK STOP
H. VEHICLE

SECTION 3 – REQUIREMENTS

A. ORDINANCE
B. VIOLATION
C. SIGN

SECTION 4 – EXEMPTIONS

A. TRAFFIC EXEMPTION

B. EMERGENCY EXEMPTION

C. MECHANICAL OPERATIONS EXEMPTION

D. WARM UP AND COOL DOWN EXEMPTION

E. PASSENGER COMFORT EXEMPTION

F. HOURS OF SERVICE EXEMPTION

Adopted 6/26/2002

MARICOPA COUNTY ORDINANCE

P-21
VEHICLE IDLING RESTRICTION

SECTION 1 - GENERAL

A. PURPOSE: The Vehicle Idling Restriction Ordinance restricts, from idling for more than five (5) consecutive minutes, any device or combination of devices that meets all of the following criteria:

1. designed with a gross vehicle weight rating of more than 14,000 pounds; and

2. required under Arizona law (Arizona Revised Statute [ARS] Title 28 Chapters 7 and 9) to be registered; and

3. designed to operate on public highways; and

4. powered by a diesel engine.

B. APPLICABILITY: This Vehicle Idling Restriction Ordinance applies to vehicle idling within Maricopa County.

SECTION 2 - DEFINITIONS: For the purpose of this ordinance, the following definitions shall apply:

A. COMBINATION OF DEVICES – The coupling of two or more pieces of equipment that consist of the device which contains the diesel engine and an attached piece of equipment, which includes but is not limited to a trailer, cement mixer, refrigeration unit or automobile.

B. DISTRIBUTION CENTER – A place with multiple bays where vehicles load or unload materials.

C. GROSS VEHICLE WEIGHT RATING – The maximum vehicle weight for which the vehicle is designed as established by the manufacturer.[1]

D. IDLING – The operation of a diesel engine when the engine is not engaged in gear.[2]

1 Mirrors the definition in R18-2-1001.36.

E. POWER TAKE OFF (PTO) MECHANISM – A unit that provides power from the engine to a trailer or other equipment.

F. PRIMARY PROPULSION ENGINE – Any engine for which the primary function is to provide mechanical power to propel or direct a vehicle, regardless of whether that power is applied directly to the propeller shaft or indirectly by way of an electrical system.

G TRUCK STOP – A place of business that provides services to drivers and their vehicles in which the service time may exceed one (1) hour.

H. VEHICLE – Any device or combination of devices with a gross vehicle weight rating of more than 14,000 pounds, required under Arizona law (ARS Title 28 Chapters 7 and 9) to be registered, designed to operate on public highways and powered by a diesel engine.[3]

---

2 Federal definition: "Curb-idle" means: (1) For manual transmission code light-duty trucks, the engine speed with the transmission in neutral or with the clutch disengaged. For automatic transmission code light-duty trucks, curb-idle means the engine speed with the automatic transmission in the Park position (or Neutral position if there is no Park position); (2) For manual transmission code heavy-duty engines, the manufacturer's recommended engine speed with the clutch disengaged. For automatic transmission code heavy-duty engines, curb idle means the manufacturer's recommended engine speed with the automatic transmission in gear and the output shaft stalled.

3 Note: AAC R18-2-101(69): "motor vehicle" means any self-propelled vehicle designed or transporting persons or property on public highways;

ARS 44-1301: “motor vehicle” means any automobile, motorcycle, truck, trailer, semitrailer, truck tractor and semitrailer combination or other vehicle operated on the roads of this state, used to transport person or property and propelled by power other than muscular power, but motor vehicle does not include traction engines, vehicles that run only on a track, bicycles or mopeds;

ARS 49-541(16): “Vehicle” means any automobile, truck, truck tractor, motor bus or self-propelled or motor-driven vehicle registered or to be registered in this state and used upon the public highways of this state for the purpose of transporting persons or property, except implements of husbandry, road rollers or road machinery temporarily operated upon the highway.

ARS 49-581: “Motor vehicle” means any self-propelled vehicle including a car, van, bus or motorcycle and all other motorized vehicles;

ARS 28-101(29): "Motor vehicle": (a) means either: (i) A self-propelled vehicle; (ii) For the purposes of the laws relating to the imposition of a tax on motor vehicle fuel, a vehicle that is operated on the highways of this state and that is propelled by the use of motor vehicle fuel. (b) Does not include a motorized wheelchair or a motorized skateboard. For the purposes of this subdivision: (i) “motorized wheelchair” means a self-propelled wheelchair that is used by a person for mobility. (Ii) “motorized skateboard” means a self-propelled device that has a motor, a deck on which a person may ride and at least two tandem wheel in contact with the ground.

ARS 28-101(50): "Truck" means a motor vehicle designed or used primarily for the carrying of property other than the effects of the driver or passengers and includes a motor vehicle to which has been added a box, a platform or other equipment for such carrying.

SECTION 3 – REQUIREMENTS

A. **ORDINANCE –** No owner or operator of a vehicle shall permit the engine of such vehicle to idle for more than five (5) consecutive minutes except as provided in Section 4 (Exemptions) of this ordinance.

B. **VIOLATION –** Any owner or operator who violates this ordinance is subject to a civil penalty of $100 for the first violation and $300 for a second or any subsequent violation.[4]

C. **SIGN –** Each truck stop owner or operator and distribution center owner or operator shall erect and maintain a permanent sign(s) that is at least 12 inches by 18 inches in size indicating that the maximum idle time allowed in Maricopa County is 5 minutes. The sign(s) shall be posted in a conspicuous location, near the dispatcher, if applicable. In addition to the above, the sign shall at a minimum contain language outlining the following:

1. The County's vehicle idling information line, and

2. The amount of money the violator will be fined.

SECTION 4 – EXEMPTIONS: This ordinance shall not apply when:

A. A vehicle is forced to remain motionless because of traffic or adverse weather conditions affecting the safe operation of the vehicle.

ARS 28-101 (51): "Truck tractor" means a motor vehicle that is designed and used primarily for drawing other vehicles and that is not constructed to carry a load other than a part of the weight of the vehicle and load drawn.
ARS 28-101 (52): "Vehicle" means a device in, on or by which a person or property is or may be transported or drawn on a public highway, excluding devices moved by human power or used exclusively on stationary rails or tracks.
ARS 28-101 (53): "Vehicle transporter" means either: (a) A truck tractor capable of carrying a load and drawing a semitrailer; (b) A truck tractor with a stinger-steered fifth wheel capable of carrying a load and drawing a semitrailer or a truck tractor with a dolly mounted fifth wheel that is securely fastened to the truck tractor at two or more points and that is capable of carrying a load and drawing a semitrailer.
R17-4-435: “Motor carrier” as defined in ARS § 28-5201 except a motor carrier transporting passengers for hire in a vehicle with a design capacity of 6 or fewer persons.
ARS 28-5201: "Motor vehicle" means a self-propelled motor driven vehicle or vehicle combination, except a lightweight motor vehicle, that is used on a public highway in the furtherance of a commercial enterprise.
In research done by ADEQ, no definitions exist for “heavy duty motor vehicle,” or “heavy duty diesel engine.”

4 Attorney General's Office (AGO) interpretation is that ARS Title 28 allows any law enforcement officer to enforce ARS 11-876, which authorized this ordinance, on private and/or public property.

B. A vehicle is being operated for emergency or law enforcement purposes.

C. The primary propulsion engine of a vehicle meets all of the following criteria:

1. is providing a power source necessary for mechanical operations other than propulsion; and

2. involves a power take off (PTO) mechanism, or other mechanical device performing the same function as a PTO; and

3. is powered by the engine for:

a. loading and unloading cargo, or

b. mixing or processing cargo, or

c. controlling cargo temperature, or

d. providing a mechanical extension to perform work functions.

D. The primary propulsion engine of a vehicle is being operated at idle to conform to manufacturer's warm up and cool down specifications, for maintenance or diagnostic purposes, or by manufacturers engaging the engines in testing for research and development.

E. The primary propulsion engine of a vehicle is being operated to supply heat or air conditioning necessary for passenger comfort/safety in those vehicles operating for commercial passenger transportation or school purposes up to a maximum of 30 minutes/hour. If ambient temperatures exceed 75 degrees Fahrenheit, passenger buses are allowed to idle up to a maximum of 60 minutes in any 90-minute time period.

F. The primary propulsion engine of a vehicle is being operated to comply with the U.S. Code of Federal Regulation 49 CFR Part 395 and the Arizona Department Of Transportation (DOT) regulation R17-5-202 referencing hours of service restrictions.

MARICOPA COUNTY ORDINANCE

P–25
LEAF BLOWER RESTRICTION

INDEX

SECTION 1 – GENERAL

A. PURPOSE

B. APPLICABILITY

SECTION 2 – DEFINITIONS

A. AREA A

B. ENFORCEMENT OFFICER

C. LANDSCAPE DEBRIS

D. LEAF BLOWER

E. PERMITS FOR THE CONTROL OF FUGITIVE DUST FROM DUST-GENERATING OPERATIONS

F. PERSON

G. PUBLIC ROADWAY

H. STABILIZED SURFACE

SECTION 3 – REQUIREMENTS

A. RESTRICTED OPERATION OF A LEAF BLOWER

B. VIOLATIONS, NOTICES AND PENALTIES

SECTION 4 – EXEMPTIONS

A. SITES WITH PERMITS FOR THE CONTROL OF FUGITIVE DUST FROM DUST GENERATING OPERATIONS

Adopted 02/20/08

MARICOPA COUNTY ORDINANCE

P–25
LEAF BLOWER RESTRICTION

SECTION 1 – GENERAL

A. **PURPOSE:** The Leaf Blower Restriction Ordinance prohibits the use of leaf blowers for the following activities:

1. Blowing of landscape debris into public roadways; and

2. Operating leaf blowers on surfaces that have not been stabilized.

B. **APPLICABILITY:** The Leaf Blower Restriction Ordinance applies to the operation of leaf blowers in sections of Area A that are within Maricopa County, including those areas within incorporated cities and towns in such sections.

SECTION 2 – DEFINITIONS: For the purpose of this ordinance, the following definitions shall apply:

A. **AREA A –** As defined in Arizona Revised Statutes (ARS) §49-541(1), the area in Maricopa County delineated as follows:

Township 8 North, Range 2 East and Range 3 East
Township 7 North, Range 2 West through Range 5 East
Township 6 North, Range 5 West through Range 6 East
Township 5 North, Range 5 West through Range 7 East
Township 4 North, Range 5 West through Range 8 East
Township 3 North, Range 5 West through Range 8 East
Township 2 North, Range 5 West through Range 8 East
Township 1 North, Range 5 West through Range 7 East
Township 1 South, Range 5 West through Range 7 East
Township 2 South, Range 5 West through Range 7 East
Township 3 South, Range 5 West through Range 1 East
Township 4 South, Range 5 West through Range 1 East

B. **ENFORCEMENT OFFICER –** Any officer of Maricopa County that has authority to enforce County rules, regulations and ordinances.

C. **LANDSCAPE DEBRIS –** Debris generated or accumulated as a result of, or moved in the course of, landscape operations. Landscape debris includes, but is not limited to, grass clippings, leaves, branches, vegetative matter, rubbish, soil and rock.

D. **LEAF BLOWER –** Any device that generates a stream of air that is designed, or used, to move landscape debris.

E. **PERMITS FOR THE CONTROL OF FUGITIVE DUST FROM DUST-GENERATING OPERATIONS –** Any site that has been issued a permit by the Control Officer as required by Rule 200 §305 of the Maricopa County Air Pollution Control Rules and Regulations.

F. **PERSON –** Any individual, public or private corporation, company, partnership, firm, association or society of persons, the federal government and any of its departments or agencies, or the state and any of its agencies, departments, or political subdivisions.

G. **PUBLIC ROADWAY –** Any street, alley, road, highway or thoroughfare of any kind that is used by the public or that is open to the public as a matter of right, including those roadways within gated communities, for the purpose of vehicular travel.

H. **STABILIZED SURFACE –** As defined in A.R.S.§11-877(A)(3), stabilized surfaces are surfaces that have been treated with asphaltic concrete, cement concrete, hardscape, penetration treatment of bituminous material and seal coat of bituminous binder and a mineral aggregate, decomposed granite cover, crushed granite cover, aggregate cover, gravel cover, grass or other continuous vegetative cover, or any combination of these stabilizers.

SECTION 3 – REQUIREMENTS

A. RESTRICTED OPERATION OF A LEAF BLOWER:

1. A person shall not operate a leaf blower in a manner that causes landscape debris to be blown into a public roadway.

2. A person shall only operate leaf blowers on a stabilized surface.

B. VIOLATIONS, NOTICES, AND PENALTIES:

1. When the Enforcement Officer has reasonable cause to believe that any person has violated or is in violation of any provision of this ordinance, the Enforcement Officer shall issue, for the first violation of this ordinance, a warning notice stating which requirement of the ordinance was violated.

2. The Enforcement Officer may impose a civil penalty of $50 for the second violation of this ordinance. Upon a third violation of this ordinance, the Enforcement Officer may impose a civil penalty of $100. After the fourth and subsequent violations of this ordination, the Enforcement Officer may impose a civil penalty of $250.

SECTION 4 – EXEMPTIONS

A. SITES WITH PERMITS FOR THE CONTROL OF FUGITIVE DUST FROM DUST-GENERATING OPERATIONS: Any site that has been issued a permit by the Control Officer for the control of fugitive dust from dust-generating operations is exempt from all sections of this ordinance.

MARICOPA COUNTY ORDINANCE

P–26
RESIDENTIAL WOODBURNING RESTRICTION

INDEX

SECTION 1 – GENERAL

A. PURPOSE

B. APPLICABILITY

SECTION 2 – DEFINITIONS

A. ADEQUATE SOURCE OF HEAT

B. APPROVED WOODBURNING DEVICE

C. AREA A

D. BURN-DOWN PERIOD

E. CARBON MONOXIDE (CO) STANDARD

F. CHIMNEY

G. INAPPROPRIATE FUEL

H. NONATTAINMENT AREA

I. OUTDOOR FIRE PITS

J. OZONE STANDARD

K. PARTICULATE MATTER NO-BURN STANDARD

L. PARTICULATE MATTER STANDARDS

M. RESIDENTIAL WOODBURNING DEVICE

N. RESTRICTED-BURN PERIOD

O. SOLE SOURCE OF HEAT

P. WOODBURNING CHIMINEA

SECTION 3 – BURNING RESTRICTIONS

A. RESTRICTED OPERATION DURING RESTRICTED-BURN PERIODS

B. UNLAWFUL OPERATION

C. LAWFUL OPERATION

D. DECLARATION OF A RESTRICTED-BURN PERIOD

E. VIOLATIONS, NOTICES, AND PENALTIES

SECTION 4 – EXEMPTIONS

A. RESIDENTIAL SOLE SOURCE OF HEAT EXEMPTION

B. TEMPORARY SOLE SOURCE OF HEAT EXEMPTION

C. EMERGENCY EXEMPTION

D. INADEQUATE ALTERNATE SOURCE OF HEAT EXEMPTION

E. APPLICATION FOR AN EXEMPTION

F. ACTION ON AN EXEMPTION APPLICATION

Adopted 10/05/94
Revised 04/21/99
Revised 11/17/99
Revised 03/26/08

MARICOPA COUNTY ORDINANCE

P–26
RESIDENTIAL WOODBURNING RESTRICTION

SECTION 1 – GENERAL

A. **PURPOSE:** The Residential Woodburning Restriction Ordinance restricts residential woodburning in a non-approved device, outdoor fire pits, woodburning chimineas, and similar outdoor fires when monitoring or forecasting indicates that air quality standards are likely to be exceeded.

B. **APPLICABILITY:** The Residential Woodburning Restriction Ordinance applies to any residential woodburning device, outdoor fire pits, woodburning chimineas, and similar outdoor fires that are within Maricopa County or within incorporated cities and towns in such sections. The Residential Woodburning Restriction Ordinance does not apply to barbecue devices and mesquite grills.

SECTION 2 – DEFINITIONS: For the purpose of this ordinance, the following definitions shall apply:

A. **ADEQUATE SOURCE OF HEAT –** A permanently installed furnace or heating system, connected to or disconnected from its energy source, designed to heat utilizing oil, natural gas, electricity, or propane, and designed to maintain a minimum of 70° Fahrenheit at a point three feet above the floor in all normally inhabited areas of a residence.

B. **APPROVED WOODBURNING DEVICE –** The following residential devices shall be approved woodburning devices, even though such devices may burn a solid fuel other than wood:

1. A device that has been certified by the Environmental Protection Agency (EPA) as conforming to Phase II EPA Standards of Performance for Wood Heaters in 40 Code of Federal Regulations (CFR) 60, Subpart AAA as amended through July 1, 2006.

2. Any pellet stove.

3. Any gas burning hearth appliances, including a dedicated gas logset permanently installed in any kind of indoor or outdoor woodburning fireplace which is designed to burn exclusively natural gas or propane.

4. Any masonry heater or any other solid fuel burning device that meets performance standards that are equivalent to the standards in 40 CFR 60, Subpart AAA as amended through July 1, 2006, and that is approved by the Control Officer and the Administrator of EPA.

C. **AREA A –** As defined in Arizona Revised Statutes (A.R.S.)§49-541(1), the area in Maricopa County delineated as follows:

Township 8 North, Range 2 East and Range 3 East
Township 7 North, Range 2 West through Range 5 East
Township 6 North, Range 5 West through Range 6 East
Township 5 North, Range 5 West through Range 7 East
Township 4 North, Range 5 West through Range 8 East
Township 3 North, Range 5 West through Range 8 East
Township 2 North, Range 5 West through Range 8 East
Township 1 North, Range 5 West through Range 7 East
Township 1 South, Range 5 West through Range 7 East
Township 2 South, Range 5 West through Range 7 East
Township 3 South, Range 5 West through Range 1 East
Township 4 South, Range 5 West through Range 1 East

D. **BURN-DOWN PERIOD –** That period of time, not to exceed three hours after declaring a restricted-burn period, required for the cessation of combustion within any residential woodburning device, outdoor fire pit, woodburning chiminea, or similar outdoor fire by withholding fuel or by modifying the air-to-fuel ratio.

E. **CARBON MONOXIDE (CO) STANDARD** – The maximum allowable eight-hour concentration that is nine parts of contaminant per million parts of air by volume (ppm).

F. **CHIMNEY –** A passage for smoke that is usually made of bricks, stone, or metal and often rises two feet above the roof of a building. An approved, factory-built chimney will have a label on each chimney connector and gas vent specifying that such chimney can be used for all fuels and will show the minimum safe clearances to combustibles.

G. **INAPPROPRIATE FUEL –** Includes, but is not limited to: leaves, grass clippings, green plants, refuse, paper, rubbish, books, magazines, fiberboard, packaging, rags, fabrics, animal waste, animal carcasses, coal, waste oil, liquid or gelatinous hydrocarbons, tar, asphalt products, waste petroleum products, paints and solvents, chemically soaked wood, wood with a moisture content of greater than 20 percent, treated wood, plastic or plastic products, rubber or rubber products, office records, sensitive or classified wastes, or any substance which normally emits dense smoke or obnoxious odors other than paper to start the fire or properly seasoned wood.

H. **NONATTAINMENT AREA –** An area so designated by the Administrator of the EPA, acting pursuant to Section 107 of the Clean Air Act, as exceeding national primary or secondary ambient air standards for a particular pollutant or pollutants.

I. **OUTDOOR FIRE PITS –** Any combustion of material outdoors, where solid fuels including wood or any other non-gaseous or non-liquid fuels are burned in the fuel bed, and the products of combustion are not directed through a flue or chimney.

J. **OZONE STANDARD –** The maximum allowable eight-hour concentration within a 24-hour period (midnight to midnight) that is 0.08 parts of contaminant per million parts of air by volume (ppm).

K. **PARTICULATE MATTER NO-BURN STANDARD** – If either of the following maximum allowable 24-hour concentrations is forecast for particulate matter:
PM_{10} – 120 micrograms per cubic meter;
$PM_{2.5}$ – 30 micrograms per cubic meter.

L. **PARTICULATE MATTER STANDARDS –** The maximum allowable 24-hour concentration that is:
PM_{10} – 150 micrograms per cubic meter;
$PM_{2.5}$ – 35 micrograms per cubic meter.

M. **RESIDENTIAL WOODBURNING DEVICE –** A woodburning device designed for solid fuel combustion so that usable heat is derived for the interior of a residence. These devices can be used for aesthetic or space-heating purposes.

N. **RESTRICTED-BURN PERIOD –** A condition declared by the Control Officer whenever meteorological conditions are conducive to an accumulation of CO, ozone and/or particulate matter in exceedance of the standards or when air quality reaches other limits established by the Control Officer.

O. **SOLE SOURCE OF HEAT –** One or more residential woodburning devices which constitute the only source of heat in a residence and/or the sole source of fuel for cooking for a residence. No residential woodburning device shall be considered the sole source of heat if the residence is equipped with a permanently installed furnace or heating system which utilizes oil, natural gas, electricity, or propane and which is designed to heat the residence whether or not such furnace or heating system is connected to or disconnected from its energy source. However, this definition shall not supersede municipal or County Building Code requirements as per authority of A.R.S. §§ 9-499.01, 9-240(B)(7), 9-276(A)(13)–(A)(15), A.R.S. § 9-801 *et seq.*

P. **WOODBURNING CHIMINEA –** Chimineas are burning devices made from clay, aluminum, or steel and are used for warmth and aesthetics outside in yards and patios. Chimineas are designed to burn solid fuels.

SECTION 3 – BURNING RESTRICTIONS:

A. RESTRICTED OPERATION DURING RESTRICTED-BURN PERIODS: During a declared restricted-burn period, a person shall be restricted from operating a residential woodburning device, an outdoor fire pit, a woodburning chiminea, or similar outdoor fire, in sections of Area A that are within Maricopa County or within incorporated cities and towns in such sections. Exemptions to this requirement are described in Section 3(C) and Section 4 of this ordinance.

B. UNLAWFUL OPERATION: A person shall:

1. Not operate a residential woodburning device, an outdoor fire pit, a woodburning chiminea, or similar outdoor fire such that emissions to the atmosphere are visible during a restricted-burn period declared by the Control Officer.

2. Not operate a residential woodburning device, an outdoor fire pit, a woodburning chiminea, or similar outdoor fire unless such residential woodburning device, outdoor fire pit, woodburning chiminea, or similar outdoor fire has been installed according to the instructions and restrictions specified by the manufacturer.

3. Not use a fuel in a residential woodburning device, an outdoor fire pit, a woodburning chiminea, or similar outdoor fire except those fuels that are recommended by the manufacturer.

4. Not burn inappropriate fuel in a residential woodburning device, an outdoor fire pit, a woodburning chiminea, or similar outdoor fire.

C. LAWFUL OPERATION:

1. During a declared restricted-burn period, a person may operate a residential woodburning device if the Control Officer has issued an exemption for such device according to Section 4 of this ordinance and if no visible emissions to the atmosphere are produced after 20 consecutive minutes immediately following an ignition of or a refueling of such residential woodburning device.

2. During a declared restricted-burn period, a person may operate a residential woodburning device if such device meets the requirements of Maricopa County Air Pollution Control Regulations Rule 318 (Approval of Residential Woodburning Devices) and if no visible emissions to the atmosphere are produced after 20 consecutive minutes immediately following an ignition of, or a refueling of, such residential woodburning device.

3. During a declared restricted-burn period, a person may operate a residential woodburning device, outdoor fire pit, woodburning chiminea, or similar outdoor fire, if such device is designed to burn exclusively natural gas or propane.

D. DECLARATION OF A RESTRICTED-BURN PERIOD:

1. The Control Officer shall declare a restricted-burn period if, after reviewing available meteorological data, atmospheric conditions, and ambient temperatures, the Control Officer determines that air pollution levels could exceed the carbon monoxide (CO) standard, the ozone standard, and/or the particulate matter no-burn standard.

2. A person responsible for a residential woodburning device, outdoor fire pit, woodburning chiminea, or similar outdoor fire, excluding those devices described in Section 3(C) of this ordinance, already in operation at the time a restricted-burn period is declared shall withhold new fuel from the residential woodburning device, outdoor fire pit, woodburning chiminea, or similar outdoor fire for the duration of the restricted-burn period.

3. Any person operating or in control of a residential woodburning device, outdoor fire pit, woodburning chiminea, or similar outdoor fire in sections of Area A that are within Maricopa County or within incorporated cities and towns in such sections has a duty to know when a restricted-burn period has been declared.

4. Notice of a restricted-burn period shall be distributed over the wire service to electronic and print media and/or announced by a recorded telephone message at least three hours before initiating any enforcement action for a violation of this ordinance.

E. VIOLATIONS, NOTICES, AND PENALTIES: For purposes of this ordinance, and in accordance with A.R.S. §11-871(D):

1. When the Control Officer has reasonable cause to believe that any person has violated or is in violation of any provision of this ordinance, the Control Officer shall issue, for the first violation of this ordinance, a warning notice which includes a summary of the Maricopa County Residential Woodburning Restriction Ordinance and information on proper woodburning techniques.

2. The Control Officer may impose a civil penalty of $50 to any person who violates this ordinance for the second violation within a one year period after having been issued a warning notice for the first violation of this ordinance.

3. For the third violation of this ordinance, the Control Officer may impose a civil penalty of $100. The Control Officer may impose a civil penalty of $250 for the fourth or any subsequent violation of this ordinance. After having been issued a citation for a violation of this ordinance, the violation may be refuted by demonstration that the smoke was not caused by a residential woodburning device, an outdoor fire pit, a woodburning chiminea, or similar outdoor fire or by proof of an exemption pursuant to Section 4 of this ordinance.

4. Only those violations of this ordinance which have occurred within one year of a present offense shall be considered as prior violations. No person shall be cited for a

violation of this ordinance more than once in any calendar day. Each day of violation constitutes a separate offense.

SECTION 4 – EXEMPTIONS

A. **RESIDENTIAL SOLE SOURCE OF HEAT EXEMPTION:** The Control Officer may grant a residential sole source of heat exemption if the Control Officer determines that a residential woodburning device meets the criteria of sole source of heat as described in Section 2(O) of this ordinance. The recipient of a residential sole source of heat exemption must apply annually to the Control Officer for renewal of such exemption, if such exemption is still necessary. The Control Officer shall not issue a residential sole source of heat exemption after December 31, 1995. However, the Control Officer may renew a residential sole source of heat exemption if such exemption was issued before December 31, 1995 and if the residential woodburning device meets the criteria of sole source of heat as described in Section 2(O) of this ordinance.

B. **TEMPORARY SOLE SOURCE OF HEAT EXEMPTION:** The Control Officer may issue a temporary sole source of heat exemption for economic or health reasons if the Control Officer determines that the applicant qualifies for financial assistance, according to the economic guidelines established under the Food Stamps, Medicaid, or low income energy assistance programs, as administered by the Income Support Division, or if the Control Officer determines that failure to grant a temporary sole source of heat exemption would endanger the health of the applicant. A temporary sole source of heat exemption shall not be issued for more than 150 days.

C. **EMERGENCY EXEMPTION:** The Control Officer may issue an emergency exemption if the Control Officer determines that an emergency situation exists. An emergency exemption shall be valid for a period determined by the Control Officer, but shall not exceed one year from the date it is issued. An emergency situation shall include, but is not limited to, the following:

1. A situation where a person demonstrates that his heating system, other than a residential woodburning device, is inoperable for reasons other than his own actions; or

2. A situation where a person demonstrates that his heating system has been involuntarily disconnected by a utility company or other fuel supplier.

D. **INADEQUATE ALTERNATE SOURCE OF HEAT EXEMPTION:** The Control Officer may issue an inadequate alternate source of heat exemption if the Control Officer determines:

1. That there is a heat source other than a residential woodburning device available to the residence;

2. That such heat source is not a sole source of heat, as defined in Section 2(O) of this ordinance, and that such heat source is used in conjunction with a residential woodburning device;

3. That such heat source is not an approved woodburning device, as defined in Maricopa County Air Pollution Control Regulations Rule 318 (Approval of Residential Woodburning Devices); and

4. That such heat source is not an adequate source of heat, as defined in Section 2(A) of this ordinance.

   The recipient of an inadequate alternate source of heat exemption must comply with municipal or County Building Code requirements (as per authority of A.R.S. §§ 9-499.01, 9-240(B)(7), 9-276(A)(13)–(A)(15), A.R.S. § 9-801 *et seq.*) and must apply annually to the Control Officer for renewal of such exemption, if such exemption is still necessary. The Control Officer shall not issue an inadequate alternate source of heat exemption after December 31, 1995. However, the Control Officer may renew an inadequate alternate source of heat exemption, if such exemption was issued before December 31, 1995 and if the residential woodburning device meets the criteria of this ordinance.

E. **APPLICATION FOR AN EXEMPTION:** Any person seeking an exemption shall do so by submitting an acceptable written application to the Control Officer. An application shall state:

1. The applicant's name and mailing address;

2. The address for which the exemption is sought; and

3. The reasons for seeking the exemption.

F. **ACTION ON AN EXEMPTION APPLICATION:** Following the receipt of an exemption application, the Control Officer shall either grant the exemption, grant the exemption subject to conditions, or deny the exemption. The Control Officer shall notify, in writing, the applicant of such decision.

MARICOPA COUNTY ORDINANCE

P–27
VEHICLE PARKING AND USE ON UNSTABILIZED VACANT LOTS

INDEX

SECTION 1 – GENERAL

A. PURPOSE

B. APPLICABILITY

SECTION 2 – DEFINITIONS

A. AREA A

B. DESIGNATED, MANAGED, OR OPENED TRAIL SYSTEM

C. ENFORCEMENT OFFICER

D. ROAD OR HIGHWAY

E. VACANT LOTS

F. VEHICLE

SECTION 3 – REQUIREMENTS

A. RESTRICTED VEHICLE PARKING AND USE

SECTION 4 – PENALTIES AND NOTICES

A. VIOLATIONS

B. NOTICES

SECTION 5 – EXEMPTIONS

Adopted 02/20/08
Revised 01/12/11

MARICOPA COUNTY ORDINANCE

P–27
VEHICLE PARKING AND USE ON UNSTABILIZED VACANT LOTS

SECTION 1 – GENERAL

A. **PURPOSE:** This ordinance limits particulate matter (PM_{10}) emissions into the ambient air from unrestricted vehicle parking and use on unstabilized vacant lots.

B. **APPLICABILITY:** This ordinance applies to vehicle parking and use in the unincorporated sections of Area A that are within Maricopa County.

SECTION 2 – DEFINITIONS: For the purpose of this ordinance, the following definitions shall apply:

A. **AREA A –** The part of the greater Phoenix metropolitan area where specific pollution control programs are in place for ozone, carbon monoxide, and particulate matter. As defined in Arizona Revised Statutes (A.R.S. § 49-541(1)), the area in Maricopa County delineated as follows:

Township 8 North, Range 2 East and Range 3 East
Township 7 North, Range 2 West through Range 5 East
Township 6 North, Range 5 West through Range 6 East
Township 5 North, Range 5 West through Range 7 East
Township 4 North, Range 5 West through Range 8 East
Township 3 North, Range 5 West through Range 8 East
Township 2 North, Range 5 West through Range 8 East
Township 1 North, Range 5 West through Range 7 East
Township 1 South, Range 5 West through Range 7 East
Township 2 South, Range 5 West through Range 7 East
Township 3 South, Range 5 West through Range 1 East
Township 4 South, Range 5 West through Range 1 East

B. **DESIGNATED, MANAGED, OR OPENED TRAIL SYSTEM –** Roads, highways, multiple-use corridors, trails, or routes that are part of a system of trails and routes that are designated, managed, or opened to public motor vehicle travel by a government land management agency by rule, order, travel management plan, sign, and/or map approved by such agency.

C. **ENFORCEMENT OFFICER –** A person who enforces rules, ordinances, codes or regulations including, but not limited to, Maricopa County Air Quality Department Inspectors, Building and Zoning Code Enforcement, Certified Peace Officers including, but not limited to, Maricopa County Sheriff Deputies.

D. **ROAD OR HIGHWAY –** The entire width between the boundary lines of every way publicly maintained by the federal government, a city, state agency, town, or county if any part of the way is generally open to the use of the public for purposes of vehicular travel. For the purpose of this ordinance, the term "road or highway" also includes designated, managed, or opened trail systems; service roads regardless of surface composition; and any private property dedicated or otherwise reserved for public or private street uses, as evidenced by a recorded document providing vehicular access to more than one property or having thereon a public easement for such use.

E. **VACANT LOTS –** Any of the following described in Section 2(E)(1) through Section 2(E)(4) of this ordinance:

1. An unsubdivided or undeveloped tract of land.

2. A subdivided residential, industrial, institutional, governmental, or commercial lot that contains no approved or permitted buildings, structures, or uses of a temporary or permanent nature.

3. A partially developed residential, industrial, institutional, governmental, or commercial lot.

4. For the purpose of this ordinance, a vacant lot is not a road or highway.

F. **VEHICLE –** A self-propelled device and its appurtenances, excluding devices moved by human power or used exclusively on stationary rails or tracks.

SECTION 3 – REQUIREMENTS

A. **RESTRICTED VEHICLE PARKING AND USE:** A person shall not park or use a vehicle on an unstabilized vacant lot within the unincorporated sections of Area A in Maricopa County.

SECTION 4 – PENALTIES AND NOTICES

A. **VIOLATIONS:** A person who violates this ordinance is subject to a civil penalty of $50. A second violation of this ordinance within three years is subject to a civil penalty of $100 and a third or any subsequent violation within a three-year period is subject to a civil penalty of $250.

B. **NOTICES:** For violations of this ordinance, the Enforcement Officer shall use a uniform traffic ticket and complaint prescribed by the rules of procedure in civil traffic cases adopted by the Supreme Court. The Enforcement Officer may issue a citation to persons in violation of this ordinance.

SECTION 5 – EXEMPTIONS

A. The property owner, person entitled to immediate possession of the property, or invitee who has permission from the land owner, may operate such vehicles if such use does not violate any other applicable laws.

B. Any site that has been issued a permit by the Control Officer for the control of fugitive dust from dust-generating operations.

MARICOPA COUNTY ORDINANCE

P–28
OFF-ROAD VEHICLE USE IN UNINCORPORATED AREAS OF MARICOPA COUNTY

INDEX

SECTION 1 – GENERAL

A. PURPOSE

B. APPLICABILITY

SECTION 2 – DEFINITIONS

A. DESIGNATED, MANAGED OR OPENED TRAIL SYSTEM

B. ENFORCEMENT OFFICER

C. ROAD OR HIGHWAY

D. VEHICLE

SECTION 3 – RESTRICTIONS

A. UNPAVED PUBLIC PROPERTY

B. UNPAVED PRIVATE PROPERTY

C. DETERMINATION OF LAWFUL AUTHORITY OR CONSENT OF THE LAWFUL OWNER

D. PROOF OF LAWFUL AUTHORITY OR CONSENT

SECTION 4 – PENALTIES AND NOTICES

A. PENALTIES

B. ALTERNATIVE PENALTY

C. NOTICES

SECTION 5 – EXEMPTIONS

Adopted 02/20/08
Revised 01/12/11

MARICOPA COUNTY ORDINANCE

P–28
OFF-ROAD VEHICLE USE IN UNINCORPORATED AREAS OF MARICOPA COUNTY

SECTION 1 – GENERAL

A. **PURPOSE:** This ordinance limits particulate matter (PM_{10}) emissions into the ambient air from unrestricted operation of any vehicle on unpaved property.

B. **APPLICABILITY:** This ordinance applies to the operation of any vehicle in unincorporated areas within Maricopa County.

SECTION 2 – DEFINITIONS: For the purpose of this ordinance, the following definitions shall apply:

A. **DESIGNATED, MANAGED OR OPENED TRAIL SYSTEM –** Roads, highways, multiple use corridors, trails or routes that are part of a system of trails and routes that are designated, managed or opened to public motor vehicle travel by a government land management agency by rule, order, travel management plan, sign, and/or map approved by such agency.

B. **ENFORCEMENT OFFICER -** A person who enforces rules, ordinances, codes, or regulations including, but not limited to, Maricopa County Air Quality Department Inspectors, Building and Zoning Code enforcement, Certified Peace Officers including, but not limited to, Maricopa County Sheriff Deputies.

C. **ROAD OR HIGHWAY -** The entire width between the boundary lines of every way publicly maintained by the federal government, a city, state agency, town or county if any part of the way is generally open to the use of the public for purposes of vehicular travel. For purposes of this ordinance, the term "road or highway" also includes designated, managed or opened trail systems; service roads regardless of surface composition; and any private property dedicated or otherwise reserved for public or private street uses, as evidenced by a recorded document providing vehicular access to more than one property, or having thereon a public easement for such use.

D. **VEHICLE—** A self-propelled device and its appurtenances, excluding devices moved by human power or used exclusively on stationary rails or tracks.

SECTION 3 – RESTRICTIONS: Vehicles operating on either unpaved public or private properties in the unincorporated areas of Maricopa County shall remain on roads or highways. A person operating a vehicle on portions of these properties other than roads or highways shall comply with the following:

A. **UNPAVED PUBLIC PROPERTY:** A person operating a vehicle on unpaved public property shall obtain lawful authority. Lawful authority consists of one of the following: rules, regulations, or orders of a federal agency, this state, a county, or municipality. Determination of lawful authority shall be made available by any one of the options listed in Section 3(C) of this ordinance.

B. **UNPAVED PRIVATE PROPERTY:** A person operating a vehicle on unpaved private property shall obtain consent of the lawful owner. Consent of the lawful owner can be obtained by any one of the options listed in Section 3(C) of this ordinance.

C. **DETERMINATION OF LAWFUL AUTHORITY OR CONSENT OF THE LAWFUL OWNER:** Determination of lawful authority or consent of the lawful owner shall be made available by any one of the options listed below:

1. A sign to designate the property is/as open. Such signs shall be in compliance with the standard travel management signing protocol used by each land managing agency which specifies the open roads and highways. The signs at a minimum shall be conspicuously placed at all points of vehicular access.

2. Posting, publishing, or filing a rule, regulation, travel management plan, or order at the locations identified at the government agency's office, or on its website.

3. Current maps published and approved by a government land management agency.

4. Virtual postings from a government land management agency.

5. Prior written recreational access agreement originating from the lawful owner granting vehicular access shall contain the following:

(a) The name, address, and telephone number of the person or organization granting permission for the use of the property;

(b) A description of the interest the person or organization granting permission has in the property (i.e., property owner, lessee, or agent);

(c) If the person or organization granting permission is not the owner of the property, the written permission shall also contain the name, address, and telephone number of the property owner;

(d) Specify the period of time for which permission for the use of the property is being granted and whether access is approved for any or a combination of OHV recreation, hunting, fishing, and/or trapping; and

(e) The signature of the person or organization representative granting permission for the use of the property.

6. Written permission of consent originating from the lawful owner granting vehicular access, shall contain the following:

(a) The name, address, and telephone number of the person granting permission for the use of the property;

(b) A description of the interest the person granting permission has in the property (i.e., property owner, lessee, or agent);

(c) If the person granting permission is not the owner of the property, the written permission shall also contain the name, address, and telephone number of the property owner;

(d) Specify the period of time for which permission for the use of the property is being granted; and

(e) The signature of the person or organization representative granting permission for the use of the property.

D. **PROOF OF LAWFUL AUTHORITY OR CONSENT:** Whenever any person is stopped by an Enforcement Officer for a violation of Section 3 of this ordinance, such person shall, upon the request of the Enforcement Officer, identify or present proof of lawful authority or lawful owner consent as required in Section 3(C) of this ordinance.

SECTION 4 – PENALTIES AND NOTICES: Violations of this ordinance shall be punishable by civil or criminal penalties. The issuance of any lawful authority, consent of the lawful owner, or written permission, as allowed by this ordinance, shall not relieve any person subject to the requirements of this ordinance from complying with any federal laws, Arizona laws, or the Maricopa County Air Pollution Control Regulations.

A. **PENALTIES:** A person who violates this ordinance shall be subject to the following penalties:

1. For the first offense, a civil penalty of $100.

2. For the second offense within a three-year period, a civil penalty of $250.

3. For the third or any subsequent offense within a three-year period, a Class 3 misdemeanor.

B. **ALTERNATIVE PENALTY:** In addition to or in lieu of a fine under Section 4 of this ordinance, a judge may order the person to perform at least eight (8) but not more than twenty-four (24) hours of community restitution, or to complete a safety and environmental ethics course according to A.R.S. § 28-1175 related to the off-highway operation of motor vehicles, or both.

C. **NOTICES:** For violations of this ordinance, the Enforcement Officer shall use a uniform traffic ticket and complaint prescribed by the rules of procedure in civil traffic cases adopted by the Supreme Court. The Enforcement Officer may issue a citation to persons in violation of this ordinance.

SECTION 5 – EXEMPTIONS

A. This ordinance shall not apply during a period of emergency or if the operation is directed by a peace officer or other public authority.

B. This ordinance shall not apply to the property owner, or person entitled to immediate possession of the property provided such property owner or person does not violate any other applicable laws.

C. This ordinance shall not apply to operations directed by utilities for operation, distribution, and transmission systems and operations directed by railroad companies for operation and maintenance provided that both of the following conditions are met:

1. Operations are performed in or using a marked company vehicle; and

2. If operations are performed in or using a personal vehicle, then identification of the company shall be visible and readable by the public without having to be asked by the public (e.g., included in / posted on a sign that is visible on the vehicle or in the window of the vehicle).

D. This ordinance shall not apply to commercial farming practices including activities of a dairy, a beef cattle feed lot, a poultry facility and a swine facility.

APPENDIX A

FOSSIL FUEL-FIRED STEAM GENERATORS: The following procedures shall be used to convert gaseous emission monitoring data in parts per million to g/million cal (lb/million BTU) where necessary.

(1) **Measurement of Oxygen in Flue Gas:** When the owner or operator of a fossil fuel-fired steam generator elects to measure oxygen in the flue gases, the measurements of the pollutant concentration and oxygen concentration shall each be on a consistent basis (wet or dry).

a. When measurements are on a wet basis, except where wet scrubbers are employed or where moisture is otherwise added to stack gases, the following conversion procedure shall be used:

$$E_Q = C_{ws}F_w \frac{(20.9)}{(20.9(1 - B_{wa}) - \% O_{2wa})}$$

b. When measurements are on a wet basis and the water vapor content of the stack gas is determined at least once every fifteen minutes the following conversion procedure shall be used:

$$E_Q = C_{ws}F \frac{(20.9)}{(20.9(1 - B_{ws}) - \% O_{2ws})}$$

Note: This equation is approved in principle. Approval for actual practice is contingent upon demonstrating the ability to accurately determine B_{WS} such that any absolute error in B_{WS} will not cause an error of more than +/- 1.5 percent in the term:

$$\frac{(20.9)}{(20.9(1 - B_{ws}) - \% O_{2ws})}$$

c. When measurements are on a dry basis, the following conversion procedure shall be used:

$$E_Q = CF \frac{(20.9)}{(20.9 - \% O_2)}$$

(2) **Measurement of Carbon Dioxide in Flue Gas:** When the owner or operator elects to measure carbon dioxide in the flue gases, the measurement of the pollutant concentration and the carbon dioxide concentration shall each be on a consistent basis (wet or dry) and the following conversion procedure used:

$$E_Q = CF_c \frac{(100)}{(\%CO_2)}$$

The values used in the above equations are derived as follows:

E_Q = Pollutant emission, g/million cal (lb/million BTU).

C = Pollutant concentration, g/dscm (lb/dsdf), determined by multiplying the average concentration (ppm) for each hourly period by 4.16×10^{-5} M g/dscm per ppm (2.64×10^{-9} M lb/dscf per ppm) where M = pollutant molecular weight, g/g mole (lb/lb mole) or M = 64 for sulfur dioxide and 46 for oxides of nitrogen.

$\%O_2, \%CO_2$ = Oxygen or carbon dioxide volume (expressed as percent) determined with equipment specified under Section 303 of Rule 245.

F,Fc = A factor representing a ratio of the volume of dry flue gases generated to the calorific value of the fuel combusted (F), a factor representing a ratio of the volume of carbon dioxide generated to the calorific value of the fuel combusted (F_c), respectively. Values of F and F_c are given in § 60.45 (f) of Part 60, Chapter 1, Title 40, Code of Federal Regulations.

C_{ws} = Pollutant concentrations at stack conditions, g/wscm (lb/wscf), determined by multiplying the average concentration (ppm) for each one-hour period by 4.15×10^{-5} M g/wscm per ppm (2.59×10^{-9} M = lb/wscf per ppm) where M = pollutant molecular weight, g/g mole (lb/lb mole) or M = 64 for sulfur dioxide and 46 for nitrogen oxides.

$\%O_{2ws}$ = Oxygen volume (expressed as percent - wet basis) determined with equipment specified under Section 303 of Rule 245.

F_w = A factor representing a ratio of the volume of wet flue gases generated to the caloric value of the fuel combusted. Values of F_w are given in Federal Register, Vol. 41, October 12, 1976, p. 44838, a.4.

B_{wa} = Proportion by volume of water vapor in the ambient air. Approval may be given for determination of B_{wa} by on-site instrumental measurement provided that the absolute accuracy of the measurement technique can be demonstrated to be within +/- 0.7 percent water vapor. Estimation methods for B_{wa} are given in Federal Register, Vol. 41, October 12, 1976, p. 44838, a.5.

B_{ws} = Proportion by volume of water vapor in the stack gas.

SULFURIC ACID PLANTS: For sulfuric acid plants, the owner or operator shall:

(1) Establish a conversion factor three times daily according to the procedures of § 60.84 (b) of Chapter 1, Title 40, Code of Federal Regulations dated 10/6/75;

(2) Multiply the conversion factor by the average sulfur dioxide concentration in the flue gases to obtain average sulfur dioxide emission in Kg/metric ton (lb/short ton); and

(3) Report the average sulfur dioxide emission for each averaging period in excess of the applicable emission standard in the quarterly summary.

NITRIC ACID PLANTS: For nitric acid plants, the owner or operator shall:

(1) Establish a conversion factor according to the procedures of §60.73(b) of Chapter 1, Title 40, Code of Federal Regulations;

(2) Multiply the conversion factor by the average nitrogen oxides concentration in the flue gases to obtain the nitrogen oxides emissions in the units of the applicable standard;

(3) Report the average nitrogen oxides emission for each averaging period in excess of applicable emission standard in the quarterly summary.

ALTERNATE DATA REPORTING OR REDUCTION PROCEDURES: The Control Officer may allow data reporting or reduction procedures varying from those set forth in Rule 245 if the owner or operator of a source shows to the satisfaction of the Control Officer that his procedures are equally effective. Such procedures may include, but are not limited to the following:

(1) Alternative procedures for computing emission averages that do not require integration of data (e.g., some facilities may demonstrate that the variability of their emissions is sufficiently small to allow accurate reduction of data based upon computing averages from equally spaced data points over the averaging period).

(2) Alternative methods of converting pollutant concentration measurements to the units of the emission standards.

Last Formatted - Fall 1997

Adopted 11/15/93
Revised 02/15/95
Revised 06/06/07

APPENDIX B
STANDARD PERMIT APPLICATION FORM AND FILING INSTRUCTIONS
MARICOPA COUNTY

FILING INSTRUCTIONS

No application shall be considered complete until the Control Officer has determined that all information required by this application form and the applicable statutes and regulations has been submitted. The Control Officer may waive certain application requirements for specific source types pursuant to Rule 200-Permit Provisions, Rule 210-Title V Permit Provisions, and/or Rule 220-Non-Title V Permit Provisions of these rules. For permit revisions, the applicant need only supply information which directly pertains to the revision. The Control Officer shall develop special guidance documents and forms to assist certain sources requiring Non-Title V permits in completing the application form and filing instructions. Guidance documents can be requested by contacting the Maricopa County Air Quality Department at the address and phone number given on the "Standard Permit Application Form".

In addition to the information required on the application form, the applicant shall supply the following:

1. Description of the process to be carried out in each unit (include Source Classification Code, if known).
2. Description of product.
3. Description of alternate operating scenario, if desired by applicant (include Source Classification Code, if known).
4. Description of alternate operating scenario product, if applicable.
5. A flow diagram for all processes.
6. A material balance for all processes (optional, only if emission calculations are based on a material balance).
7. Emissions related information:
    a. The source shall submit the potential emissions of regulated air pollutants as defined in Rule 100-General Provisions And Definitions of these rules for all emission sources. Emissions shall be expressed in pounds per hour, tons per year, and such other terms as may be requested. Emissions shall be submitted using the standard "Emission Sources" portion of the "Standard Permit Application Form". Emissions information shall include fugitive emissions in the same manner as stack emissions, regardless of whether the source category in question is included in the list of sources contained in the definition of major source in Rule 100-General Provisions And Definitions of these rules.
    b. The source identify and describe all points of emissions and to submit additional information related to the emissions of regulated air pollutants sufficient to verify which requirements are applicable to the source and sufficient to determine any fees pursuant to Rule 280-Fees of these rules.
8. Citation and description of all applicable requirements as defined in Rule 100-General Provisions And Definitions of these rules including voluntarily accepted limits to Rule 220-Non-Title V Permit Provisions of these rules.
9. An explanation of any voluntarily accepted limits established pursuant to Rule 220-Non-Title V Permit Provisions of these rules and of any proposed exemptions from otherwise applicable requirements.
10. The following information to the extent it is needed to determine or regulate emissions or to comply with the requirements of Rule 220-Non-Title V Permit Provisions of these rules:
    a. Maximum annual process rate for each piece of equipment which generates air emissions.
    b. Maximum annual process rate for the whole plant.
    c. Maximum rated hourly process rate for each piece of equipment which generates air emissions.
    d. Maximum rated hourly process rate for the whole plant.
    e. For all fuel burning equipment including generators, a description of fuel use, including the type used, the quantity used per year, the maximum and average quantity used per hour, the percent used for process heat (heat other than for HVAC or domestic hot water), and higher heating value of the fuel. For solid fuels and fuel oils, state the potential sulfur and ash content.
    f. A description of all raw materials used and the maximum annual and hourly, monthly, or quarterly quantities of each material used.
    g. Anticipated operating schedules:
        1. Percent of annual production by season.
        2. Days of the week normally in operation.
        3. Shifts or hours of the day normally in operation.
        4. Number of days per year in operation.
    h. Limitations on source operations and any work practice standards affecting emissions.
    i. A demonstration of how the source will meet any limitations accepted voluntarily pursuant to Rule 220-Non-Title V Permit Provisions of these rules.

11. A description of all process and control equipment for which permits are required including:
    a. Name.
    b. Make (if available).
    c. Model (if available).
    d. Serial number (if available).
    e. Date of manufacture (if available).
    f. Size/production capacity.
    g. Type.
12. Stack Information:
    a. Identification.
    b. Description.
    c. Building dimensions.
    d. Exit gas temperature.
    e. Exit gas velocity.
    f. Height.
    g. Inside dimensions.
13. Site diagram which includes:
    a. Property boundaries.
    b. Adjacent streets or roads.
    c. Directional arrow.
    d. Elevation.
    e. Closest distance between equipment and property boundary.
    f. Equipment layout.
    g. Relative location of emission sources or points.
    h. Location of emission points and non-point emission areas.
    i. Location of air pollution control equipment.
14. Air pollution control information:
    a. Description of or reference to any applicable test method for determining compliance with each applicable requirement.
    b. Identification, description and location of air pollution control equipment, including spray nozzles and hoods, and compliance monitoring devices or activities.
    c. The rated and operating efficiency of air pollution control equipment.
    d. Data necessary to establish required efficiency for air pollution control equipment (e.g. air to cloth ratio for baghouses, pressure drop for scrubbers, and warranty information).
    e. Evidence that operation of the new or modified pollution control equipment will not violate any ambient air quality standards, or maximum allowable increases pursuant to Rule 500-Attainment Area Classification of these rules.
15. Equipment manufacturer's bulletins and shop drawings may be acceptable where appropriate.
16. Compliance plan:
    a. A description of the compliance status of the source with respect to all applicable requirements including, but not limited to:
        1. A demonstration that the source or modification will comply with the applicable requirements contained in Regulation III-Control Of Air Contaminants.
        2. A demonstration that the source or modification will comply with the applicable requirements contained in rules promulgated pursuant to A.R.S. §49-480.03-Federal Hazardous Air Pollutants (HAPS) Program; Date Specified By Administrator; Prohibition.
        3. A demonstration that the source or modification will comply with the applicable requirements contained in Rule 372-Maricopa County Hazardous Air Pollutants (HAPs) Program of these rules.
        4. A demonstration that the source or modification will comply with any voluntarily accepted limitations pursuant to Rule 220-Non-Title V Permit Provisions of these rules.
    b. A compliance schedule as follows:
        1. For applicable requirements with which the source is in compliance, a statement that the source will continue to comply with such requirements.
        2. For applicable requirements that will become effective during the permit term, a statement that the source will meet such requirements on a timely basis. A statement that the source will meet in a timely manner applicable requirements that become effective during the permit term shall satisfy this provision, unless a more detailed schedule is expressly required by the applicable requirement.
        3. A schedule of compliance for sources that are not in compliance with all applicable requirements at the time of permit issuance. Such a schedule shall include a schedule of remedial measures, including an enforceable sequence of actions with milestones, leading to compliance with any applicable requirements for which the source will be in noncompliance at the time of permit issuance. This compliance schedule shall resemble and be at least as stringent as that contained in any judicial consent decree or administrative order to which the source is subject. Any such

schedule of compliance shall be supplemental to, and shall not sanction noncompliance with, the applicable requirements on which it is based.

c. A schedule for submission of certified progress reports no less frequently than every six months for sources required to have a schedule of compliance to remedy a violation.

d. The compliance plan content requirements specified in this paragraph shall apply and be included in the acid rain portion of a compliance plan for an affected source, except as specifically superseded by regulations promulgated under Title IV of the Act with regard to the schedule and method the source will use to achieve compliance with the acid rain emissions limitations.

17. Compliance certification:

a. A certification of compliance with all applicable requirements including voluntarily accepted limitations pursuant to Rule 220-Non-Title V Permit Provisions of these rules by a responsible official consistent with Rule 210-Title V Permit Provisions or Rule 220-Non-Title V Permit Provisions of these rules. The certification shall include:

1. Identification of the applicable requirements which are the basis of the certification.
2. A statement of methods used for determining compliance, including a description of monitoring, recordkeeping, and reporting requirements and test methods.
3. A schedule for submission of compliance certifications during the permit term to be submitted no less frequently than annually or more frequently if specified by the underlying applicable requirement or by the permitting authority.
4. A statement indicating the source's compliance status with any applicable enhanced monitoring and compliance certification requirements.
5. A certification of truth, accuracy, and completeness pursuant to Rule 210-Title V Permit Provisions or Rule 220-Non-Title V Permit Provisions of these rules.

b. Acid rain program compliance plan: Sources subject to the Federal acid rain regulations shall use nationally-standardized forms for acid rain portions of permit applications and compliance plans, as required by regulations promulgated under Title IV of the Act.

18. A new major source as defined in Rule 240-Permits For New Major Sources And Major Modifications To Existing Major Sources of these rules or a major modification shall submit all information required in this Appendix and information necessary to show compliance with Rule 240-Permits For New Major Sources And Major Modifications To Existing Major Sources of these rules including, but not limited to:

a. For sources located in a nonattainment area:

1. In the case of a new major source as defined in Rule 240-Permits For New Major Sources And Major Modifications To Existing Major Sources of these rules or a major modification subject to an emission limitation which is lowest achievable emission rate (LAER) for that source or facility, the application shall contain a determination of LAER that is consistent with the requirements of the definition of LAER contained in Rule 240-Permits For New Major Sources And Major Modifications To Existing Major Sources of these rules. The demonstration shall contain the data and information relied upon by the applicant in determining the emission limitation that is LAER for the source or facility for which a permit is sought.
2. In the case of a new major source as defined in Rule 240-Permits For New Major Sources And Major Modifications To Existing Major Sources of these rules or a major modification subject to the demonstration requirement of Rule 240-Permits For New Major Sources And Major Modifications To Existing Major Sources of these rules, the applicant shall submit such demonstration in a form that lists and describes all existing major sources owned or operated by the applicant and a statement of compliance with all conditions contained in the permits or conditional orders of each of the sources.
3. In the case of a new major source as defined in Rule 240-Permits For New Major Sources And Major Modifications To Existing Major Sources of these rules or a major modification subject to the offset requirements described in Rule 240-Permits For New Major Sources And Major Modifications To Existing Major Sources of these rules, the applicant shall demonstrate the manner in which the new major source or major modification meets the requirements of Rule 240-Permits For New Major Sources And Major Modifications To Existing Major Sources of these rules.
4. An applicant for a new major source as defined in Rule 240-Permits For New Major Sources And Major Modifications To Existing Major Sources of these rules or a major modification for volatile organic compounds or carbon monoxide (or both) which will be located in a nonattainment area for ozone or carbon monoxide (or both) shall submit the analysis described in Rule 240-Permits For New Major Sources And Major Modifications To Existing Major Sources of these rules.

b. For sources located in an attainment area:

1. A demonstration of the manner in which a new major source or major modification which will be located in an attainment area for a pollutant for which the source is classified as a major source as defined in Rule 240-Permits For New Major Sources And Major Modifications To Existing Major Sources of these rules or the modification is classified as a major modification will meet the requirements of Rule 240-Permits For New Major Sources And Major Modifications To Existing Major Sources of these rules.
2. In the case of a new major source as defined in Rule 240-Permits For New Major Sources And Major Modifications To Existing Major Sources of these rules or major modification subject to an emission limitation which is best available control technology (BACT) for that source or facility, the application shall contain a determination of BACT that is consistent with the requirements of the definition of BACT contained in Rule 100-General Provisions And Definitions of these rules. The demonstration shall contain the data and information relied upon by the applicant in determining the emission limitation that is BACT for the source or facility for which a permit is sought.
3. In the case of a new major source as defined in Rule 240-Permits For New Major Sources And Major Modifications To Existing Major Sources of these rules or major modification required to perform and submit an air impact analysis in the form prescribed in Rule 240-Permits For New Major Sources And Major Modifications To Existing Major Sources of these rules, such an analysis shall meet the requirements of Rule 240-Permits For New Major Sources And Major Modifications To Existing Major Sources of these rules. Unless otherwise exempted in writing by the Control Officer, the air impact analysis shall include all of the information and data specified in Rule 240-Permits For New Major Sources And Major Modifications To Existing Major Sources of these rules.
4. If an applicant seeks an exemption from any or all of the requirements of Rule 240-Permits For New Major Sources And Major Modifications To Existing Major Sources of these rules, the applicant shall provide sufficient information and data in the application to demonstrate compliance with the requirements of the sections under which an exemption is sought.

19. Calculations on which all information requested in this Appendix is based.

MARICOPA COUNTY
ENVIRONMENTAL SERVICES DEPARTMENT
DIVISION OF AIR POLLUTION CONTROL

1001 N. Central Ave., Ste 201
Phoenix, AZ 85004
(602) 506-6010

STANDARD PERMIT APPLICATION FORM

(As required by A.R.S. § 49-480, and Chapter 3, Article 3, Arizona Administrative Code)

1. Permit to be issued to: (Business license name of organization that is to receive permit)

   _____

2. Mailing Address: _____
   City: _____ State: _____ ZIP: _____
3. Plant Name (if different from item #1 above):

   _____

4. Name (or names) of Owner or Operator:

   _____
   Phone: _____
5. Name of Owner's Agent:

   _____
   Phone: _____
6. Plant/Site Manager or Contact Person:

   _____
   Phone: _____
7. Proposed Equipment/Plant Location Address:

   _____
   City: _____ County: MARICOPA ZIP: _____
   Indian Reservation (if applicable): _____
   Section/Township/Range: _____
   Latitude: ___ ° ___ ' ___ " Longitude: ___ ° ___ ' ___ " Elevation: _____ ft.
8. General Nature of Business: _____

   _____
   Standard Industrial Classification Code: _____
9. Type of Organization: ___ Corporation ___ Individual Owner
   ___ Partnership ___ Government Entity (Government Facility Code: _
   _____)
   ___ Other: _____
10. Permit Application Basis:
   ___ New Source ___ Revision ___ Renewal of Existing Permit
   ___ Portable Source ___ General Permit (Check all that apply.)
   For renewal or modification, include existing permit number:
   Date of Commencement of Construction or Modification: _____
   Is **any** of the equipment to be leased to another individual or entity?
   ___ Yes ___ No

11. Signature of Responsible Official of Organization _____
   Official Title of Signer: _____

12. Typed or Printed Name of Signer: _____

   Date: _____ Phone Number: _____

COMPANY NAME & LOCATION _____

EMISSION SOURCES

PAGE _____ OF _____
DATE _____

Estimated Potential to Emit as per Rule 100.
Review of applications and issuance of permits will be expedited by supplying all necessary information on this Table.

REGULATED AIR POLLUTANT DATA								EMISSION POINT DISCHARGE PARAMETERS						
EMISSION POINT (1)		CHEMICAL COMPOSITION OF TOTAL STREAM	R.AIR POLLUTANT EMISSION RATE		UTM COORDINATES OF EMISSION PT.(5)			STACK SOURCES (6)					NONPOINT SOURCES (7)	
NUMBER	NAME	REGULATED AIR POLLUTANT NAME (2)	#/ HR. 3)	TONS/ YEAR (4)	ZONE	EAST (Mtrs)	NORTH (Mtrs)	HEIGHT ABOVE GROUND /feet	HEIGHT ABOVE STRUC. /feet	EXIT DATA DIA. (ft.)	EXIT DATA VEL. (fps.)	EXIT DATA TEMP. (°F)	LENGTH (ft.)	WIDTH (ft.)

GROUND ELEVATION OF FACILITY ABOVE MEAN SEA LEVEL _____ feet
ADEQ STANDARD CONDITIONS ARE 293K AND 101.3 KILOPASCALS (A.A.C. R18-2-101)
General Instructions:

(1) Identify each emission point with a unique number for this plant site, consistent with emission point identification used on plot plan, previous permits, and Emissions Inventory Questionnaire. Include fugitive emissions. Limit emission point number to eight (8) character spaces. For each emission point use as many lines as necessary to list regulated air pollutant data. Typical emission point names are: heater, vent, boiler, tank, reactor, separator, baghouse, fugitive, etc. Abbreviations are O.K.

(2) Components to be listed include regulated air pollutants as defined in R18-2-101. Examples of typical component names are: Carbon Monoxide (CO), Nitrogen Oxides (NO_X), Sulfur Dioxide (SO_2), Volatile Organic Compounds (VOC), particulate matter (PM), particulate less than 10 microns (PM_{10}), etc. Abbreviations are O.K.

(3) Pounds per hour (#/HR) is maximum potential emission rate expected by applicant.

(4) Tons per year is annual maximum potential emission expected by applicant, which takes into account process operating schedule.

(5) As a minimum applicant shall furnish a facility plot plan as described in the filing instructions. UTM coordinates are required only if the source is a major source or is required to perform refined modeling for the purposes of demonstrating compliance with ambient air quality guidelines.

(6) Supply additional information as follows if appropriate:

(a) Stack exit configuration other than a round vertical stack. Show length and width for a rectangular stack. Indicate if horizontal discharge with a note.

(b) Stack's height above supporting or adjacent structures if structure is within 3 "stack height above the ground" of stack.

(7) Dimensions of nonpoint sources as defined in R18-2-101.

MARICOPA COUNTY

APPENDIX C
FUGITIVE DUST TEST METHODS

INDEX

SECTION 1 – **[**RESERVED]

SECTION 2 – TEST METHODS FOR STABILIZATION

SECTION 3 – VISUAL OPACITY DETERMINATION OF EMISSIONS FROM DUST-GENERATING OPERATIONS

SECTION 4 – VISUAL OPACITY DETERMINATION OF EMISSIONS FROM LIVESTOCK ACTIVITIES – CORRALS, PENS, AND ARENAS

Adopted 06/16/99
Revised 02/16/00
Revised 04/07/04
Revised 03/26/08

MARICOPA COUNTY
AIR POLLUTION CONTROL REGULATIONS

APPENDIX C
FUGITIVE DUST TEST METHODS

1. [RESERVED]

2. TEST METHODS FOR STABILIZATION

2.1 For Unpaved Roads and Unpaved Parking Lots:

2.1.1 Opacity Test Method: The purpose of this test method is to estimate the percent opacity of fugitive dust plumes caused by vehicle movement on unpaved roads and unpaved parking lots. This method can only be conducted by an individual who has received certification as a qualified observer. Qualification and testing requirements can be found in Section 3.4 of this appendix.

a. Step 1: Stand at least 16.5 feet from the fugitive dust source in order to provide a clear view of the emissions with the sun oriented in the 140° sector to the back. Following the above requirements, make opacity observations so that the line of vision is approximately perpendicular to the dust plume and wind direction. If multiple plumes are involved, do not include more than one plume in the line of sight at one time.

b. Step 2: Record the fugitive dust source location, source type, method of control used, if any, observer's name, certification data and affiliation, and a sketch of the observer's position relative to the fugitive dust source. Also record the time, estimated distance to the fugitive dust source location, approximate wind direction, estimated wind speed, description of the sky condition (presence and color of clouds), observer's position to the fugitive dust source, and color of the plume and type of background on the visible emission observation from both when opacity readings are initiated and completed.

c. Step 3: Make opacity observations, to the extent possible, using a contrasting background that is perpendicular to the line of vision. Make opacity observations approximately 1 meter above the surface from which the plume is generated. Note that the observation is to be made at only one visual point upon generation of a plume, as opposed to visually tracking the

entire length of a dust plume as it is created along a surface. Make two observations per vehicle, beginning with the first reading at zero seconds and the second reading at five seconds. The zero-second observation should begin immediately after a plume has been created above the surface involved. Do not look continuously at the plume but, instead, observe the plume briefly at zero seconds and then again at five seconds.

d. Step 4: Record the opacity observations to the nearest 5% on an observational record sheet. Each momentary observation recorded represents the average opacity of emissions for a 5-second period. While it is not required by the test method, EPA recommends that the observer estimate the size of vehicles which generate dust plumes for which readings are taken (e.g. mid-size passenger car or heavy-duty truck) and the approximate speeds the vehicles are traveling when readings are taken.

e. Step 5: Repeat Step 3 (Section 2.1.1(c) of this appendix) and Step 4 (Section 2.1.1(d) of this appendix) until you have recorded a total of 12 consecutive opacity readings. This will occur once six vehicles have driven on the source in your line of observation for which you are able to take proper readings. The 12 consecutive readings must be taken within the same period of observation but must not exceed 1 hour. Observations immediately preceding and following interrupted observations can be considered consecutive.

f. Step 6: Average the 12 opacity readings together. If the average opacity reading equals 20% or lower, the source is in compliance

2.1.2 Silt Content Test Method: The purpose of this test method is to estimate the silt content of the trafficked parts of unpaved roads and unpaved parking lots. The higher the silt content, the more fine dust particles that are released when cars and trucks drive on unpaved roads and unpaved parking lots.

a. Equipment:

(1) A set of sieves with the following openings: 4 millimeters (mm), 2 mm, 1 mm, 0.5 mm and 0.25 mm (or a set of standard/commonly available sieves), a lid, and collector pan.

(2) A small whisk broom or paintbrush with stiff bristles and dustpan 1 ft. in width. (The broom/brush should preferably have one, thin row of bristles no longer than 1.5 inches in length).

(3) A spatula without holes.

(4) A small scale with half-ounce increments (e.g., postal/package scale).

(5) A shallow, lightweight container (e.g., plastic storage container).

(6) A sturdy cardboard box or other rigid object with a level surface.

(7) A basic calculator.

(8) Cloth gloves (optional for handling metal sieves on hot, sunny days).

(9) Sealable plastic bags (if sending samples to a laboratory).

(10) A pencil/pen and paper.

b. Step 1: Look for a routinely traveled surface, as evidenced by tire tracks. (Only collect samples from surfaces that are not damp due to precipitation or dew. This statement is not meant to be a standard in itself for dampness where watering is being used as a control measure. It is only intended to ensure that surface testing is done in a representative manner.) Use caution when taking samples to ensure personal safety with respect to passing vehicles. Gently press the edge of a dustpan (1 foot in width) into the surface four times to mark an area that is 1 square foot. Collect a sample of loose surface material using a whiskbroom or brush and slowly sweep the material into the dustpan, minimizing escape of dust particles. Use a spatula to lift heavier elements such as gravel. Only collect dirt/gravel to an approximate depth of 3/8 inch or 1 cm in the 1 square foot area. If you reach a hard, underlying subsurface that is < 3/8 inch in depth, do not continue collecting the sample by digging into the hard surface. In other words, you are only collecting a surface sample of loose material down to 1 cm. In order to confirm that samples are collected to 1 cm in depth, a wooden dowel or other similar narrow object at least one foot in length can be laid horizontally across the survey area while a metric ruler is held perpendicular to the dowel.

At this point, you can choose to place the sample collected into a plastic bag or container and take it to an independent laboratory for silt content analysis. A reference to the procedure the laboratory is required to follow is at the end of this section.

c. Step 2: Place a scale on a level surface. Place a lightweight container on the scale. Zero the scale with the weight of the empty container on it. Transfer the entire sample collected in the dustpan to the container, minimizing escape of dust particles. Weigh the sample and record its weight.

d. Step 3: Stack a set of sieves in order according to the size openings specified above, beginning with the largest size opening (4 mm) at the top. Place a collector pan underneath the bottom (0.25 mm) sieve.

e. **Step 4:** Carefully pour the sample into the sieve stack, minimizing escape of dust particles by slowly brushing material into the stack with a whiskbroom or brush. (On windy days, use the trunk or door of a car as a wind barricade.) Cover the stack with a lid. Lift up the sieve stack and shake it vigorously up, down and sideways for at least 1 minute.

f. **Step 5**: Remove the lid from the stack and disassemble each sieve separately, beginning with the top sieve. As you remove each sieve, examine it to make sure that all of the material has been sifted to the finest sieve through which it can pass (e.g., material in each sieve [besides the top sieve that captures a range of larger elements] should look the same size). If this is not the case, re-stack the sieves and collector pan, cover the stack with the lid, and shake it again for at least 1 minute. (You only need to reassemble the sieve(s) that contain material, which requires further sifting.)

g. **Step 6**: After disassembling the sieves and collector pan, slowly sweep the material from the collector pan into the empty container originally used to collect and weigh the entire sample. Take care to minimize escape of dust particles. You do not need to do anything with material captured in the sieves; only the collector pan. Weigh the container with the material from the collector pan and record its weight.

h. **Step 7**: If the source is an unpaved road, multiply the resulting weight by 0.38. If the source is an unpaved parking lot, multiply the resulting weight by 0.55. The resulting number is the estimated silt loading. Then, divide by the total weight of the sample you recorded earlier in Step 2 (Section 2.1.2(c) of this appendix) and multiply by 100 to estimate the percent silt content.

i. **Step 8**: Select another two routinely traveled portions of the unpaved road or unpaved parking lot and repeat this test method. Once you have calculated the silt loading and percent silt content of the 3 samples collected, average your results together.

j. **Step 9:** Examine results. If the average silt loading is less than 0.33 oz/ft², the surface is STABLE. If the average silt loading is greater than or equal to 0.33 oz/ft², then proceed to examine the average percent silt content. If the source is an unpaved road and the average percent silt content is 6% or less, the surface is STABLE. If the source is an unpaved parking lot and the average percent silt content is 8% or less, the surface is STABLE. If your field test results are within 2% of the standard (for example, 4%–8% silt content on an unpaved road), it is recommended that you collect 3 additional samples from the source according to Step 1 (Section 2.1.2(b) of this appendix) and take them to an independent laboratory for silt content analysis.

k. **Independent Laboratory Analysis:** You may choose to collect 3 samples from the source, according to Step 1 (Section 2.1.2(b) of this appendix), and send them to an independent laboratory for silt content analysis rather than conduct the sieve field procedure. If so, the test method the laboratory is required to use is: U.S. Environmental Protection Agency (1995), "Procedures for Laboratory Analysis of Surface/Bulk Dust Loading Samples", (AP-42 Fifth Edition, Volume I, Appendix C.2.3 "Silt Analysis"), Office of Air Quality Planning and Standards, Research Triangle Park, North Carolina.

2.2 Stabilization Limitations for Open Areas and Vacant Lots: The test methods described in Section 2.3 through Section 2.7 of this appendix shall be used to determine whether an open area or a vacant lot has a stabilized surface. Should a disturbed open area or vacant lot contain more than one type of disturbance, soil, vegetation, or other characteristics, which are visibly distinguishable, test each representative surface separately for stability, in an area that represents a random portion of the overall disturbed conditions of the site, according to the appropriate test methods in Section 2.3 through Section 2.7 of this appendix.

2.3 Soil Crust Determination (the Drop Ball Test):

2.3.1 Drop a steel ball with a diameter of 15.9 millimeters (0.625 inches) and a mass ranging from 16-17 grams (0.56-0.60 ounce) from a distance of one foot directly above (at a 90° angle perpendicular to) the soil surface. If blowsand is present, clear the blowsand from the surfaces on which the drop ball test is conducted. Blowsand is defined as thin deposits of loose uncombined grains covering less than 50% of a vacant lot or project site that have not originated from the representative surface being tested. If material covers a visible crust, which is not blowsand, apply the test method in Section 2.4: Determination of Threshold Friction Velocity (TFV) of this appendix to the loose material to determine whether the surface is stabilized.

2.3.2 A sufficient crust is defined under the following conditions: once a ball has been dropped according to Section 2.3.1 of this appendix, the ball does not sink into the surface, so that it is partially or fully surrounded by loose grains and, upon removing the ball, the surface upon which it fell has not been pulverized, so that loose grains are visible.

2.3.3 Randomly select each representative disturbed surface for the drop ball test by using a blind "over the shoulder" toss of a throwable object (e.g., a metal weight with survey tape attached). Using the point of fall as the lower left-hand corner, measure a one-foot square area. Drop the ball three times within the one-foot by one-foot square survey area, using a consistent pattern across the survey area. The survey area shall be considered to have passed the drop ball test if at least two out of the three times that the ball was dropped, the results met the criteria in Section 2.3.2 of this appendix. Select at least two other

survey areas that represent a random portion of the overall disturbed conditions of the site, and repeat this procedure. If the results meet the criteria of Section 2.3.2 of this appendix for all of the survey areas tested, then the site shall be considered to have passed the drop ball test and shall be considered sufficiently crusted.

2.3.4 At any given site, the existence of a sufficient crust covering one portion of the site may not represent the existence or protectiveness of a crust on another portion of the site. Repeat the drop ball test as often as necessary on each portion of the overall conditions of the site using the random selection method set forth in Section 2.3.3 of this appendix for an accurate assessment.

2.4 Determination of Threshold Friction Velocity (TFV): For disturbed surface areas that are not crusted or vegetated, determine threshold friction velocity (TFV) according to the following sieving field procedure (based on a 1952 laboratory procedure published by W. S. Chepil).

2.4.1 Obtain and stack a set of sieves with the following openings: 4 millimeters (mm), 2 mm, 1 mm, 0.5 mm, and 0.25 mm or obtain and stack a set of standard/commonly available sieves. Place the sieves in order according to size openings, beginning with the largest size opening at the top. Place a collector pan underneath the bottom (0.25 mm) sieve. Collect a sample of loose surface material from an area at least 30 cm by 30 cm in size to a depth of approximately 1 cm using a brush and dustpan or other similar device. Only collect soil samples from dry surfaces (i.e., when the surface is not damp to the touch). Remove any rocks larger than 1 cm in diameter from the sample. Pour the sample into the top sieve (4-mm opening) and cover the sieve/collector pan unit with a lid. Minimize escape of particles into the air when transferring surface soil into the sieve/collector pan unit. Move the covered sieve/collector pan unit by hand using a broad, circular arm motion in the horizontal plane. Complete twenty circular arm movements, ten clockwise and ten counter-clockwise, at a speed just necessary to achieve some relative horizontal motion between the sieves and the particles. Remove the lid from the sieve/collector pan unit and disassemble each sieve separately beginning with the largest sieve. As each sieve is removed, examine it for loose particles. If loose particles have not been sifted to the finest sieve through which they can pass, reassemble and cover the sieve/collector pan unit and gently rotate it an additional ten times. After disassembling the sieve/collector pan unit, slightly tilt and gently tap each sieve and the collector pan so that material aligns along one side. In doing so, minimize escape of particles into the air. Line up the sieves and collector pan in a row and visibly inspect the relative quantities of catch in order to determine which sieve (or whether the collector pan) contains the greatest volume of material. If a visual determination of relative volumes of catch among sieves is difficult, use a graduated cylinder to measure the volume. Estimate TFV for the sieve catch with the greatest volume using Table 1 of this appendix, which provides a correlation between sieve opening size and TFV.

Table 1. Determination of Threshold Friction Velocity

Tyler Sieve No.	ASTM 11 Sieve No.	Opening (mm)	TFV(cm/s)
5	5	4	135
9	10	2	100
16	18	1	76
32	35	0.5	58
60	60	0.25	43
Collector Pan	—	—	30

2.4.2 Collect at least three soil samples which represent random portions of the overall conditions of the site, repeat the above TFV test method for each sample and average the resulting TFVs together to determine the TFV uncorrected for non-erodible elements. Non-erodible elements are distinct elements, in the random portion of the overall conditions of the site, that are larger than 1 cm in diameter, remain firmly in place during a wind episode, and inhibit soil loss by consuming part of the shear stress of the wind. Non-erodible elements include stones and bulk surface material but do not include flat or standing vegetation. For surfaces with non-erodible elements, determine corrections to the TFV by identifying the fraction of the survey area, as viewed from directly overhead, that is occupied by non-erodible elements using the following procedure. For a more detailed description of this procedure, see Section 2.7 (Test Methods for Stabilization-Rock Test Method) of this appendix. Select a survey area of 1 meter by 1 meter that represents a random portion of the overall conditions of the site. Where many non-erodible elements lie within the survey area, separate the non-erodible elements into groups according to size. For each group, calculate the overhead area for the non-erodible elements according to the following equations:

Average Length × Average Width = Average Dimensions Eq. 1

Average Dimensions × Number of Elements = Overhead Area Eq. 2

Overhead Area of Group 1 + Overhead Area of Group 2 (etc.) = Total Overhead Area Eq. 3

Total Overhead Area ÷ 2 = Total Frontal Area Eq. 4

(Total Frontal Area ÷ Survey Area) × 100 = Percent Cover of Non-Erodible Elements Eq. 5

Note: Ensure consistent units of measurement (e.g., square meters or square inches) when calculating percent cover.

Repeat this procedure on an additional two distinct survey areas that represent a random portion of the overall conditions of the site and average the results. Use Table 2 of this appendix to identify the correction factor for the percent cover of non-erodible elements. Multiply the TFV by the corresponding correction factor to calculate the TFV corrected for non-erodible elements.

Table 2. Correction Factors for Threshold Friction Velocity

Percent Cover of Non-Erodible Elements Factor	Correction Factor
Greater than or equal to 10%	5
Greater than or equal to 5% and less than 10%	3
Less than 5% and greater than or equal to 1%	2
Less than 1%	None

2.5 Determination of Flat Vegetative Cover: Flat vegetation includes attached (rooted) vegetation or unattached vegetative debris lying on the surface with a predominant horizontal orientation that is not subject to movement by wind. Flat vegetation, which is dead but firmly attached, shall be considered equally protective as live vegetation. Stones or other aggregate larger than 1 centimeter in diameter shall be considered protective cover in the course of conducting the line transect test method. Where flat vegetation exists, conduct the following line transect test method.

2.5.1 Line Transect Test Method: Stretch a 100-foot measuring tape across a survey area that represents a random portion of the overall conditions of the site. Firmly anchor both ends of the measuring tape into the surface using a tool such as a screwdriver, with the tape stretched taut and close to the soil surface. If vegetation exists in regular rows, place the tape diagonally (at approximately a 45° angle) away from a parallel or perpendicular position to the vegetated rows. Pinpoint an area the size of a 3/32 inch diameter brazing rod or wooden dowel centered above each 1-foot interval mark along one edge of the tape. Count the number of times that flat vegetation lies directly underneath the pinpointed area at 1-foot intervals. Consistently observe the underlying surface from a 90° angle directly above each pinpoint on one side of the tape. Do not count the underlying surface as vegetated if any portion of the pinpoint extends beyond the edge of the vegetation underneath in any direction. If clumps of vegetation or vegetative debris lie underneath the pinpointed area, count the surface as vegetated, unless bare soil is visible directly below the pinpointed area. When 100 observations have been made, add together the number of times a surface was counted as vegetated. This total represents the percent of flat vegetation cover (e.g., if 35 positive counts were made, then vegetation cover is 35%). If the survey area that represents a random portion of the overall conditions of the site is too small for 100 observations, make as many observations as possible. Then multiply the count of vegetated surface areas by the appropriate conversion factor to obtain percent cover. For example, if vegetation was counted 20 times within a total of 50 observations, divide 20 by 50 and multiply by 100 to obtain a flat vegetation cover of 40%.

2.5.2 Conduct the line transect test method, as described in Section 2.5.1 of this appendix, an additional two times on areas that represent a random portion of the overall conditions of the site and average results.

2.6 Determination of Standing Vegetative Cover: Standing vegetation includes vegetation that is attached (rooted) with a predominant vertical orientation. Standing vegetation, which is dead but firmly rooted, shall be considered equally protective as live vegetation. Conduct the following standing vegetation test method to determine if 30% cover or more exists. If the resulting percent cover is less than 30% but equal to or greater than 10%, then conduct the test in Section 2.4 (Determination of Threshold Friction Velocity [TFV]) of this appendix in order to determine if the site is stabilized, such that the standing vegetation cover is equal to or greater than 10%, where threshold friction velocity, corrected for non-erodible elements, is equal to or greater than 43 cm/second.

2.6.1 For standing vegetation that consists of large, separate vegetative structures (e.g., shrubs and sagebrush), select a survey area that represents a random portion of the overall conditions of the site that is the shape of a square with sides equal to at least 10 times the average height of the vegetative structures. For smaller standing vegetation, select a survey area of three feet by three feet.

2.6.2 Count the number of standing vegetative structures within the survey area. Count vegetation, which grows in clumps as a single unit. Where different types of vegetation exist and/or vegetation of different height and width exists, separate the vegetative structures with similar dimensions into groups. Count the number of vegetative structures in each group within the survey area. Select an individual structure within each group that represents the average height and width of the vegetation in the group. If the structure is dense (e.g., when looking at it vertically from base to top there is little or zero open air space within its perimeter), calculate and record its frontal silhouette area, according to Equation 6 of this appendix. Also, use Equation 6 of this appendix to estimate the average height and width of the vegetation if the survey area is larger than nine square feet. Otherwise, use the procedure in Section 2.6.3 of this appendix to calculate the frontal silhouette area. Then calculate the percent cover of standing vegetation according to Equations 7, 8, and 9 of this appendix.

Average Height × Average Width = Frontal Silhouette Area — Eq. 6

Frontal Silhouette Area of Individual Vegetative Structure ×
Number of Vegetation Structures Per Group = Frontal Silhouette Area of Group — Eq. 7

Frontal Silhouette Area of Group 1 + Frontal Silhouette Area of Group 2 (etc.)
= Total Frontal Silhouette Area. — Eq. 8

(Total Frontal Silhouette Area ÷ Survey Area) × 100
= Percent Cover of Standing Vegetation — Eq. 9

[(Number of Circled Gridlines within the Outlined Area Counted that are not Covered by Vegetation ÷ Total Number of Gridline Intersections within the Outlined Area) × 100]
= Percent Open Space — Eq. 10

100 – Percent Open Space = Percent Vegetative Density — Eq. 11

Percent Vegetative Density ÷ 100 = Vegetative Density Eq. 12

Max. Height × Max. Width × (Vegetative Density ÷ 0.4)$^{0\ 5}$ = Frontal Silhouette Area Eq. 13

Note: Ensure consistent units of measurement (e.g., square meters or square inches) when calculating percent cover.

2.6.3 Vegetative Density Factor: Cut a single, representative piece of vegetation (or consolidated vegetative structure) to within 1 cm of surface soil. Using a white paper grid or transparent grid over white paper, lay the vegetation flat on top of the grid (but do not apply pressure to flatten the structure). Grid boxes of 1-inch or ½-inch squares are sufficient for most vegetation when conducting this procedure. Using a marker or pencil, outline the shape of the vegetation along its outer perimeter, according to Figure B, C, or D of this appendix, as appropriate. (Note: Figure C differs from Figure D primarily in that the width of vegetation in Figure C is narrow at its base and gradually broadens to its tallest height. In Figure D, the width of the vegetation generally becomes narrower from its midpoint to its tallest height.) Remove the vegetation, count and record the total number of gridline intersections within the outlined area, but do not count gridline intersections that connect with the outlined shape. There must be at least 10 gridline intersections within the outlined area and preferably more than 20, otherwise, use smaller grid boxes. Draw small circles (no greater than a 3/32-inch diameter) at each gridline intersection counted within the outlined area. Replace the vegetation on the grid within its outlined shape. From a distance of approximately 2 feet directly above the grid, observe each circled gridline intersection. Count and record the number of circled gridline intersections that are not covered by any piece of the vegetation. To calculate percent vegetative density, use Equations 10 and 11 of this appendix. If percent vegetative density is equal to or greater than 30, use an equation (one of the Equations 14, 15, or 16 of this appendix) that matches the outline used to trace the vegetation (Figure B, C, or D) to calculate its frontal silhouette area. If percent vegetative density is less than 30, use Equations 12 and 13 of this appendix to calculate the frontal silhouette area.

Figure B. Cylinder

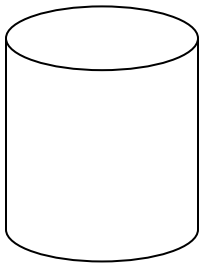

Frontal Silhouette Area = Maximum Height × Maximum Width Eq. 14

Figure C. Inverted Cone

Frontal Silhouette Area = Maximum Height × ½ Maximum Width Eq. 15

Figure D. Upper Sphere

Frontal Silhouette Area = (3.14 × Maximum Height × ½ Maximum Width) ÷ 2 Eq. 16

2.7 Rock Test Method: The Rock Test Method, which is similar to Section 2.4 (Test Methods for Stabilization-Determination of Threshold Friction Velocity [TFV]) of this appendix, examines the wind-resistance effects of rocks and other non-erodible elements on disturbed surfaces. Non-erodible elements are objects larger than 1 centimeter (cm) in diameter that remain firmly in place even on windy days. Typically, non-erodible elements include rocks, stones, glass fragments, and hard-packed clumps of soil lying on or embedded in the surface. Vegetation does not count as a non-erodible element in this method. The purpose of this test method is to estimate the percent cover of non-erodible elements on a given surface to see whether such elements take up enough space to offer protection against windblown dust. For simplification, the following test method refers to all non-erodible elements as "rocks".

2.7.1 Select a 1-meter × 1-meter survey area that represents the general rock distribution on the surface. (A 1-meter × 1-meter area is slightly greater than a 3-foot × 3-foot area). Mark off the survey area by tracing a straight, visible line in the dirt along the edge of a measuring tape or by placing short ropes, yard sticks, or other straight objects in a square around the survey area.

2.7.2 Without moving any of the rocks or other elements, examine the survey area. Since rocks > 3/8 inch (1 cm) in diameter are of interest, measure the diameter of some of the smaller rocks to a get a sense for which rocks need to be considered.

2.7.3 Mentally group the rocks > 3/8 inch (1 cm) diameter lying in the survey area into small, medium, and large size categories. Or, if the rocks are all approximately the same size, simply select a rock of average size and typical shape. Without removing any of the rocks from the ground, count the number of rocks in the survey area in each group and write down the resulting number.

2.7.4 Without removing rocks, select one or two average-size rocks in each group and measure the length and width. Use either metric units or standard units. Using a calculator, multiply the length times the width of the rocks to get the average dimensions of the rocks in each group. Write down the results for each rock group.

2.7.5 For each rock group, multiply the average dimensions (length times width) by the number of rocks counted in the group. Add the results from each rock group to get the total rock area within the survey area.

2.7.6 Divide the total rock area, calculated in Section 2.7.5 of this appendix, by two (to get frontal area). Divide the resulting number by the size of the survey area (making sure the units of measurement match), and multiply by 100 for percent rock cover. For example, the total rock area is 1,400 square centimeters, divide 1,400 by 2 to get 700. Divide 700 by 10,000 (the survey area is 1 meter by 1 meter, which is 100 centimeters by 100 centimeters or 10,000 square centimeters), and multiply by 100. The result is 7% rock cover. If rock measurements are made in inches, convert the survey area from meters to inches (1 inch = 2.54 centimeters).

2.7.7 Select and mark off two additional survey areas and repeat the procedures described in Sections 2.7.1 through 2.7.6 of this appendix. Make sure the additional survey areas also represent the general rock distribution on the site. Average the percent cover results from all three survey areas to estimate the average percent of rock cover.

2.7.8 If the average rock cover is greater than or equal to 10%, the surface is stable. If the average rock cover is less than 10%, follow the procedures in Section 2.7.9 of this appendix.

2.7.9 If the average rock cover is less than 10%, the surface may or may not be stable. Follow the procedures in Section 2.4 (Determination of Threshold Friction Velocity [TFV]) of this rule and use the results from the rock test method as a correction (i.e., multiplication) factor. If the rock cover is at least 1%, such rock cover helps to limit windblown dust. However, depending on the soil's ability to release fine dust particles into the air, the percent rock cover may or may not be sufficient enough to stabilize the surface. It is also possible that the soil itself has a high enough TFV to be stable without even accounting for rock cover.

2.7.10 After completing the procedures described in Section 2.7.9 of this appendix, use Table 2 of this appendix to identify the appropriate correction factor to the TFV, depending on the percent rock cover. Multiply the correction factor by the TFV value for a final TFV estimate that is corrected for non-erodible elements.

3. VISUAL OPACITY DETERMINATION OF EMISSIONS FROM DUST-GENERATING OPERATIONS

3.1 **Applicability:** This method is applicable for the determination of opacity of fugitive dust plumes from dust-generating operations.

3.2 **Principle:** the opacity of emissions from sources of visible emissions is determined visually by an observer qualified according to the procedures of Section 3.4 of this appendix.

3.3 **Procedures:** An observer qualified in accordance with Section 3.4 of this appendix, shall use the following procedures for visually determining the opacity of emissions.

3.3.1 To determine the opacity of non-continuous dust plumes caused by activities including, but not limited to, bulk material loading/unloading, non-conveyorized screening, or trenching with backhoes:

a. **Position:** Stand at least 25 feet from the dust-generating operation in order to provide a clear view of the emissions with the sun oriented in the 140º sector to the back. Choose a discrete portion of the operation for observation, such as the unloading point, not the whole operation. Following the above requirements, make opacity observations so that the line of vision is approximately perpendicular to the dust plume and wind direction. If multiple plumes are involved, do not include more than one plume in the line of sight at one time.

b. **Initial Fallout Zone:** The initial fallout zone within the plume must be identified. Record the distance from the equipment or path that is your identified initial fallout zone. The initial fallout zone is that area where the heaviest particles drop out of the entrained fugitive dust plume. Opacity readings should be taken at the maximum point of the entrained fugitive dust plume that is located outside the initial fallout zone.

c. **Field Records:** Note the following on an observational record sheet:

(1) Location of dust-generating operation, type of operation, type of equipment in use and activity, and method of control used, if any;

(2) Observer's name, certification data and affiliation, a sketch of the observer's position relative to the dust-generating operation, and

observer's estimated distance and direction to the location of the dust-generating operation;

(3) Time that readings begin, approximate wind direction, estimated wind speed, description of the sky condition (presence and color of clouds); and

(4) Color of the plume and type of background.

d. Observations: Make opacity observations, to the extent possible, using a contrasting background that is perpendicular to the line of vision. Make two observations per discrete activity, beginning with the first reading at zero seconds and the second reading at five seconds. The zero-second observation should begin immediately after a plume has been created above the surface involved. Do not look continuously at the plume but, instead, observe the plume briefly at zero seconds and then again at five seconds.

e. Recording Observations: Record the opacity observations to the nearest 5% on an observational record sheet. Each momentary observation recorded represents the average opacity of emissions for a five-second period. Repeat observations until you have recorded at least a total of 12 consecutive opacity readings. The 12 consecutive readings must be taken within the same period of observation but must not exceed one hour. Observations immediately preceding and following interrupted observations can be considered consecutive (e.g., vehicle traveled in front of path, plume doubled over).

f. Data Reduction: Average 12 consecutive opacity readings together. If the average opacity reading equals 20% or lower, the dust-generating operation is in compliance.

3.3.2 To determine the opacity of continuous dust plumes caused by equipment and activities including but not limited to graders, trenchers, paddlewheels, blades, clearing, leveling, and raking:

a. Position: Stand at least 25 feet from the dust-generating operation to provide a clear view of the emissions with the sun oriented in the 140º sector to your back. Following the above requirements, make opacity observations so that the line of vision is approximately perpendicular to the dust plume and wind direction.

b. Dust Plume: Evaluate the dust plume generation and determine if the observations will be made from a single plume or from multiple related plumes.

(1) If a single piece of equipment is observed working, then all measurements should be taken off the resultant plume as long as the equipment remains within the 140º sector to the back.

(2) If there are multiple related sources or multiple related points of emissions of dust from a particular activity, or multiple pieces of equipment operating in a confined area, opacity readings should be taken at the densest point within the discrete length of equipment travel path within the 140º sector to the back. Readings can be taken for more than one piece of equipment within the discrete length of travel path within the 140º sector to the back.

c. Initial Fallout Zone: The initial fallout zone within the plume must be identified. Record the distance from the equipment or path that is your identified initial fallout zone. The initial fallout zone is that area where the heaviest particles drop out of the entrained fugitive dust plume. Opacity readings should be taken at the maximum point of the entrained fugitive dust plume that is located outside the initial fallout zone.

d. Field Records: Note the following on an observational record sheet:

(1) Location of the dust-generating operation, type of operation, type of equipment in use and activity, and method of control used, if any;

(2) Observer's name, certification data and affiliation, a sketch of the observer's position relative to the dust-generating operation, and observer’s estimated distance and direction to the location of the dust-generating operation; and

(3) Time that readings begin, approximate wind direction, estimated wind speed, description of the sky condition (presence and color of clouds).

e. Observations: Make opacity observations, to the extent possible, using a contrasting background that is perpendicular to the line of vision. Make opacity observations at a point beyond the fallout zone. The observations should be made at the densest point. Observations will be made every 10 seconds until at least 12 readings have been recorded. Do not look continuously at the plume, but observe the plume momentarily at 10-second intervals. If the equipment generating the plume travels outside the field of observation or if the equipment ceases to operate, mark an “X” for the 10-second reading interval. Mark an “X” when plumes are stacked or doubled, either behind or in front, or become parallel to line of sight. Opacity readings identified as “X” shall be considered interrupted readings.

f. **Recording Observations:** Record the opacity observations to the nearest 5% on an observational record sheet. Each momentary observation recorded represents the average opacity of emissions for a 10-second period.

g. **Data Reduction:** Average 12 consecutive opacity readings together. If the average opacity reading equals 20% or lower, the dust-generating operation is in compliance.

3.4 Qualification and Testing:

3.4.1 Certification Requirements: To receive certification as a qualified observer, a candidate must be tested and demonstrate the ability to assign opacity readings in 5% increments to 25 different black plumes and 25 different white plumes, with an error not to exceed 15% opacity on any one reading and an average error not to exceed 7.5% opacity in each category. Candidates shall be tested according to the procedures described in Section 3.4.2 of this appendix. Any smoke generator used pursuant to Section 3.4.2 of this appendix shall be equipped with a smoke meter which meets the requirements of Section 3.4.3 of this appendix. Certification tests that do not meet the requirements of Sections 3.4.2 and 3.4.3 of this appendix are not valid. The certification shall be valid for a period of 6 months, and after each 6-month period the qualification procedures must be repeated by an observer in order to retain certification.

3.4.2 Certification Procedure: The certification test consists of showing the candidate a complete run of 50 plumes, 25 black plumes and 25 white plumes, generated by a smoke generator. Plumes shall be presented in random order within each set of 25 black and 25 white plumes. The candidate assigns an opacity value to each plume and records the observation on a suitable form. At the completion of each run of 50 readings, the score of the candidate is determined. If a candidate fails to qualify, the complete run of 50 readings must be repeated in any retest. The smoke test may be administered as part of a smoke school or training program, and may be preceded by training or familiarization runs of the smoke generator, during which candidates are shown black and white plumes of known opacity.

3.4.3 Smoke Generator Specifications: Any smoke generator used for the purpose of Section 3.4.2 of this appendix shall be equipped with a smoke meter installed to measure opacity across the diameter of the smoke generator stack. The smoke meter output shall display in-stack opacity, based upon a path length equal to the stack exit diameter on a full 0% to 100% chart recorder scale. The smoke meter optical design and performance shall meet the specifications shown in Table 3 of this appendix. The smoke meter shall be calibrated as prescribed in Section 3.4.3(a) of this appendix prior to conducting each smoke reading test. At the completion of each test, the zero and span drift shall be checked, and if the drift exceeds plus or minus 1% opacity, the condition shall be corrected prior to conducting any subsequent test runs. The smoke meter

shall be demonstrated, at the time of installation, to meet the specifications listed in Table 3 of this appendix. This demonstration shall be repeated following any subsequent repair or replacement of the photocell or associated electronic circuitry, including the chart recorder or output meter, or every 6 months, whichever occurs first.

a. Calibration: The smoke meter is calibrated after allowing a minimum of 30 minutes warm-up by alternately producing simulated opacity of 0% and 100%. When stable response at 0% or 100% is noted, the smoke meter is adjusted to produce an output of 0% or 100%, as appropriate. This calibration shall be repeated until stable 0% and 100% readings are produced without adjustment. Simulated 0% and 100% opacity values may be produced by alternately switching the power to the light source on and off while the smoke generator is not producing smoke.

b. Smoke Meter Evaluation: The smoke meter design and performance are to be evaluated as follows:

(1) Light Source: Verify, from manufacturer's data and from voltage measurements made at the lamp, as installed, that the lamp is operated within plus or minus 5% of the nominal rated voltage.

(2) Spectral Response of Photocell: Verify from manufacturer's data that the photocell has a photopic response (i.e., the spectral sensitivity of the cell shall closely approximate the standard spectral-luminosity curve for photopic vision which is referenced in (b) of Table 3 of this appendix).

(3) Angle of View: Check construction geometry to ensure that the total angle of view of the smoke plume, as seen by the photocell, does not exceed 15°. Calculate the total angle of view (φ_v) as follows:

Total Angle of View = $2 \tan^{-1} (d/2L)$

where:
d = The photocell diameter + the diameter of the limiting aperture; and
L = The distance from the photocell to the limiting aperture. The limiting aperture is the point in the path between the photocell and the smoke plume where the angle of view is most restricted. In smoke generator smoke meters, this is normally an orifice plate.

(4) Angle of Projection: Check construction geometry to ensure that the total angle of projection of the lamp on the smoke plume does not exceed 15°. Calculate the total angle of projection (φ_p) as follows:

Total Angle of Projection = $2 \tan^{-1} (d/2L)$

where:
d = The sum of the length of the lamp filament + the diameter of the limiting aperture; and
L = The distance from the lamp to the limiting aperture.

(5) Calibration Error: Using neutral-density filters of known opacity, check the error between the actual response and the theoretical linear response of the smoke meter. This check is accomplished by first calibrating the smoke meter, according to Section 3.4.3(a) of this appendix, and then inserting a series of three neutral-density filters of nominal opacity of 20%, 50%, and 75% in the smoke meter path length. Use filters calibrated within plus or minus 2%. Care should be taken when inserting the filters to prevent stray light from affecting the meter. Make a total of five nonconsecutive readings for each filter. The maximum opacity error on any one reading shall be plus or minus 3%.

(6) Zero and Span Drift: Determine the zero and span drift by calibrating and operating the smoke generator in a normal manner over a 1-hour period. The drift is measured by checking the zero and span at the end of this period.

(7) Response Time: Determine the response time by producing the series of five simulated 0% and 100% opacity values and observing the time required to reach stable response. Opacity values of 0% and 100% may be simulated by alternately switching the power to the light source off and on while the smoke generator is not operating.

Table 3. Smoke Meter Design and Performance Specifications

Parameter	Specification
a. Light source	Incandescent lamp operated at nominal rated voltage.
b. Spectral response of photocell	Photopic (daylight spectral response of the human eye)
c. Angle of view	15° maximum total angle
d. Angle of projection	15° maximum total angle
e. Calibration error	Plus or minus 3% opacity, maximum
f. Zero and span drift	Plus or minus 1% opacity, 30 minutes
g. Response time	Less than or equal to 5 seconds

4. VISUAL OPACITY DETERMINATION OF EMISSIONS FROM LIVESTOCK ACTIVITIES – CORRALS, PENS, AND ARENAS

4.1 Applicability: This method is applicable for the determination of opacity of fugitive dust plumes from livestock activities (corrals, pens, and arenas).

4.2 Principle: The opacity of emissions from livestock activities (corrals, pens, and arenas) is determined visually by an observer qualified according to Section 3.4 of this appendix.

4.3 Procedures: An observer qualified in accordance with Section 3.4 of this appendix, shall use the following procedures for visually determining the opacity of emissions:

4.3.1 Position: Stand at a position at least 5 meters from the livestock activities (corrals, pens, and arenas) in order to provide a clear view of the emissions with the sun oriented in the 140° sector to the back. Consistent as much as possible with maintaining the above requirements, make opacity observations from a position such that the line of sight is approximately perpendicular to the plume and wind direction. As much as possible, if multiple plumes are involved, do not include more than one plume in the line of sight at one time.

4.3.2 Field Records: Record the name of the site, method of control used, if any, observer's name, certification data and affiliation, and a sketch of the observer's position relative to the livestock activity (corrals, pens, and arenas). Also, record the time, estimated distance to the livestock activity (corrals, pens, and arenas) location, approximate wind direction, estimated wind speed, description of the sky condition (presence and color of clouds), observer's position relative to the livestock activity (corrals, pens, and arenas), and color of the plume and type of background on the visible emission observation from when opacity readings are initiated and completed.

4.3.3 Observations: Make opacity observations, to the extent possible, using a contrasting background. For storage piles, make opacity observations approximately 1 meter above the surface from which the plume is generated. The initial observation should begin immediately after a plume has been created above the surface involved. Do not look continuously at the plume, but instead observe the plume momentarily at 15-second intervals.

4.3.4 Recording Observations: Record the opacity observations to the nearest 5% every 15 seconds on an observational record sheet. If a multiple plume exists at the time of an observation, do not record an opacity reading. Mark an “X” for that reading. If the livestock activity (corrals, pens, and arenas) ceases operating, mark an “X” for the 15-second interval reading. Readings identified as “X” shall be considered interrupted readings.

4.3.5 Data Reduction: Within any 60-minute period, count at least three minutes that are greater than 20% opacity. If at least 13 readings are greater than 20% opacity, the livestock activity (corrals, pens, and arenas) is not in compliance. Readings immediately preceding and following interrupted readings shall be deemed consecutive and in no case shall two sets overlap, resulting in multiple violations.

Adopted 07/26/00
Revised 08/22/01

APPENDIX D
List Of Insignificant Activities

The List of Insignificant Activities is a list of most common insignificant activities. An insignificant activity is any activity, process, or emissions unit that is not subject to a source-specific applicable requirement and that emits no more than 0.5 ton per year of hazardous air pollutants (HAPs) and no more than 2 tons per year of a regulated air pollutant. Source-specific applicable requirements include requirements for which emissions unit-specific information is needed to determine applicability.

Pursuant to Rule 200 of these rules, a Non-Title V source is not required to list nor to describe insignificant activities in a permit application. If a Non-Title V source's emissions are approaching an applicable requirement, then such Non-Title V source may also be required to include, in a permit application, a description of its insignificant activities and emissions calculations for such insignificant activities.

Pursuant to Rule 200 of these rules, a Title V source, in a permit application, may, rather than supplying detailed information, list and generally group its insignificant activities. However, an application may not omit information regarding insignificant activities that is needed to determine: (1) applicability of or to impose any applicable requirement; (2) whether the source is in compliance with applicable requirements; or (3) the fee amount required under these rules.

An activity, process, or emissions unit that is not included in this list may be considered an insignificant activity, if it meets the definition of insignificant activity in Rule 100 (General Provisions and Definitions) of these rules and is approved by the Control Officer and the Administrator of the Environmental Protection Agency (EPA). A source may request approval for the classification of an activity as insignificant by including such a request in its permit application, along with justification that such activity meets the definition of insignificant activity in Rule 100 (General Provisions and Definitions) of these rules.

Food Processing Equipment:

1. Any confection cooker and associated venting or control equipment cooking edible products intended for human consumption.
2. Any oven in a food processing operation where less than 1,000 pounds of product are produced per day of operation.

General Combustion Activities:

1. All natural gas and/or liquefied petroleum gas-fired pieces of equipment over 300,000 BTU per hour, only if the input capacities added together are less than 2,000,000 BTU per hour, the emissions come from fuel burning, and the equipment is used solely for heating buildings for personal comfort or for producing hot water for personal use.
2. Any oil-fueled heating piece of equipment (except off-spec. oil) with a maximum rate input capacity or an aggregate input capacity of less than:
   (a) 500,000 BTU/hour if only emissions came from fuel burning, or
   (b) 1,000,000 BTU/hour if only emissions came from fuel burning and the equipment is used solely for heating buildings for personal comfort or for producing hot water for personal use.

Surface Coating And Printing Equipment:

1. Any equipment or activity using no more than one gallon per day of surface coating or any combination of surface coating and solvent, which contains either VOC or hazardous air pollutants (HAPs) or both.

Solvent Cleaning Equipment:

1. Any non-vapor cleaning machine (degreaser) or dip-tank having a liquid surface area of 1 square foot (0.09 square meters) or less, or having a maximum capacity of 1 gallon (3.79 liters) or less.

Internal Combustion (IC) Equipment:

1. IC engine-driven compressors, IC engine-driven electrical generator sets, and IC engine-driven water pumps used only for emergency replacement or standby service (including testing of same), not to exceed 4,000 pounds of NO_x and CO at 500 hours of operation per year.
2. Any piston-type IC engine with a manufacturer's maximum continuous rating of no more than 50 brake horsepower (bhp).

Laboratories And Pilot Plants:

1. Lab equipment used exclusively for chemical and physical analyses.

Storage And Distribution:

1. Chemical or petroleum storage tanks or containers that hold 250 gallons or less and would have emissions of a regulated air pollutant.
2. Any emissions unit, operation, or activity that handles or stores no more than 12,000 gallons of a liquid with a vapor pressure less than 1.5 psia.
3. Any equipment used exclusively for the storage of unheated organic material with: (1) an initial boiling point of 150° Centigrade (C) (302° Fahrenheit (F)) or greater, as determined by ASTM test method 1078-86; or (2) a vapor pressure of no more than 5 millimeters mercury (mmHg) (0.1 pound per square inch (psi) absolute), as determined by ASTM test method D-2879-86.
4. Any equipment with a capacity of no more than 4,200 gallons (100 barrels) used exclusively to store oil with specific gravity 0.8762 or higher (30° API or lower), as measured by API test method 2547 or ASTM test method D-1298-80.
5. Any equipment used exclusively for the storage of liquefied gases in unvented pressure vessels, except for emergency pressure-relief valves.
6. Any equipment used exclusively to compress or hold dry natural gas. Any ICE or other equipment associated with the dry natural gas should not be considered an insignificant activity, unless such ICE or other equipment independently qualifies as an insignificant activity.
7. Any equipment used exclusively for the storage of fresh, commercial, or purer grade of: (1) sulfuric or phosphoric acid with acid content of no more than 99% by weight; or (2) nitric acid with acid content of no more than 70% by weight.

Miscellaneous Activities:

1. Any blast cleaning equipment using a suspension of abrasive material in water and the control equipment venting such blast cleaning equipment.
2. Cooling towers: Any water cooling tower which: (1) has a circulation rate of less than 10,000 gallons per minute; and (2) is not used to cool process water, water from barometric jets, or water from barometric condensers.
3. Batch mixers with rated capacity of 5 cubic feet or less.

4. Wet sand and gravel production facilities that obtain material from subterranean and subaqueous beds, whose production rate is 200 tons per hour or less, and whose permanent in-plant roads are paved and cleaned to control dust. This does not include activities in emissions units, which are used to crush or grind any non-metallic minerals.
5. Any other activity pursuant to Rule 200 of these rules, which meets all of the following requirements:
   (a) Is not otherwise subject to a source-specific applicable requirement.
   (b) Is not needed to determine all applicable requirements, compliance status, or fee amounts.
   (c) Does not emit more than 0.5 ton per year of hazardous air pollutants (HAPs) or more than 2 tons per year of a regulated air pollutant, and
   (d) Is approved by the Control Officer and the Administrator of the Environmental Protection Agency (EPA).
6. Any brazing, soldering, welding, or cutting torch equipment used in manufacturing and construction activities and with the potential to emit hazardous air pollutant (HAP) metals, provided the total emissions of HAPs do not exceed 0.5 tons per year.
7. Hand-held or manually operated equipment used for buffing, polishing, carving, cutting, drilling, machining, routing, sanding, sawing, surface grinding, or turning of ceramic art work, precision parts, leather, metals, plastics, fiberboard, masonry, carbon, glass, or wood.
8. Any aerosol can puncturing or crushing operation that processes less than 500 cans per day, provided such operation uses a closed loop recovery system.
9. Any laboratory fume hood or vent, provided such equipment is used exclusively for the purpose of teaching, research, or quality control.

Adopted 07/26/00
Revised 08/22/01

APPENDIX E
List Of Trivial Activities

The List of Trivial Activities is a list of most common trivial activities. A trivial activity is any activity, process, or emissions unit that has extremely low emissions and is not subject to a source-specific requirement. An activity, process, or emissions unit that is conducted as part of a manufacturing process or is related to the source's primary business activity is not considered trivial.

Pursuant to Rule 200 of these rules, Title V sources and Non-Title V sources are not required, in permit applications, to list trivial activities, to describe trivial activities, nor to include the emissions from trivial activities.

General Combustion Activities:

1. Combustion emissions from propulsion of mobile sources, except for vessel emissions from outer continental shelf sources.

Surface Coating And Printing Equipment:

1. Equipment used for surface coating, painting, dipping or spraying operations, except those that will emit volatile organic compounds (VOC) or hazardous air pollutants (HAPs).

Cleaning Equipment:

1. Laundry activities, except for dry-cleaning and steam boilers.

Internal Combustion Equipment:

1. Internal combustion (IC) engines used for landscaping purposes.
2. Emergency (backup) electrical generators at residential locations.

Testing And Monitoring Equipment:

1. Routine calibration and maintenance of laboratory equipment or other analytical instruments.
2. Equipment used for quality control/assurance or inspection purposes, including sampling equipment used to withdraw materials for analysis.
3. Hydraulic and hydrostatic testing equipment.
4. Environmental chambers not using HAP gases.
5. Shock chambers.
6. Humidity chambers.
7. Solar simulators.
8. Vents from continuous emissions monitors and other analyzers.

Office Equipment:

1. Air-conditioning units used for human comfort that do not have applicable requirements under Title VI of the Act.
2. Ventilating units used for human comfort that do not exhaust air pollutants into the ambient air from any manufacturing/industrial or commercial process.
3. Consumer use of office equipment and products, not including printers or businesses primarily involved in photographic reproduction.
4. Bathroom/toilet vent emissions.

5. Tobacco smoking rooms and areas.
6. Consumer use of paper trimmers/binders.

Repair And Maintenance:

1. Janitorial services and consumer use of janitorial products.
2. Plant maintenance and upkeep activities (e.g., groundskeeping, general repairs, cleaning, painting, welding, plumbing, re-tarring roofs, installing insulation, and paving parking lots), provided these activities are not conducted as part of a manufacturing process, are not related to the source's primary business activity, and not otherwise triggering a permit modification. Cleaning and painting activities qualify, if they are not subject to VOC or HAP control requirements. Asphalt batch plant owners and/or operators must still get a permit, if otherwise required.
3. Repair or maintenance shop activities not related to the source's primary business activity (excluding emissions from surface coating or degreasing (solvent metal cleaning) activities) and not otherwise triggering a permit modification.

Storage And Distribution:

1. Storage tanks, vessels, containers holding or storing liquid substances that will not emit any VOC or HAPs. Exemptions for storage tanks containing petroleum liquids or other VOCs should be based on size limits and vapor pressure of liquids stored and are not appropriate for this list.
2. Demineralized water tanks and demineralizer vents.
3. Boiler water treatment operations, not including cooling towers.

Hand Operated Equipment:

1. Hand-held equipment for buffing, polishing, cutting, drilling, sawing, grinding, turning, or machining wood, metal, or plastic.
2. Hand-held applicator equipment for hot melt adhesives with no VOC in the adhesive formulation.
3. Portable electrical generators that can be moved by hand from one location to another. "Moved by hand" means that it can be moved without the assistance of any motorized or non-motorized vehicle, conveyance, or device.
4. Air compressors and pneumatically operated equipment, including hand tools.

Food Equipment:

1. Non-commercial food preparation.

Water And Waste Water Treatment:

1. Process water filtration systems and demineralizers.
2. Oxygen scavenging (de-aeration) of water.

Emergency Equipment:

1. Fire suppression systems.
2. Emergency road flares.

Roadways And Motor Vehicles:

1. Fugitive emissions related to movement of passenger vehicles, provided the emissions are not counted for applicability purposes and any required fugitive dust control plan or its equivalent is submitted.

Miscellaneous Activities:

1. Blacksmith forges.
2. Brazing, soldering and welding equipment, and cutting torches related to manufacturing and construction activities that do not result in emission of HAP metals.
3. Batteries and battery charging stations, except at battery manufacturing plants.
4. Storage tanks, reservoirs, and pumping and handling equipment, of any size, containing soaps, vegetable oil, grease, animal fat, and nonvolatile aqueous salt solutions, provided appropriate lids and covers are utilized.
5. Equipment used to mix and package soaps, vegetable oil, grease, animal fat, and nonvolatile aqueous salt solutions, provided appropriate lids and covers are utilized.
6. Drop hammers or hydraulic presses for forging or metalworking.
7. Natural gas pressure regulator vents, excluding venting at oil and gas production facilities.
8. CO_2 lasers, used only on metals and other materials which do not emit HAPs in the process.
9. Electric or steam-heated drying ovens and autoclaves, but not the emissions from the articles or substances being processed in the ovens or autoclaves, or the boilers delivering the steam.
10. Salt baths using nonvolatile salts that do not result in emissions of any regulated air pollutants.
11. Laser trimmers using dust collection to prevent fugitive emissions.
12. Ozone generators.
13. Steam vents and safety relief valves.
14. Steam leaks.
15. Steam cleaning operations.
16. Steam sterilizers.
17. Equipment used exclusively to slaughter animals, but not including other equipment at slaughterhouses, such as rendering cookers, boilers, heating plants, incinerators, and electrical power generating equipment.
18. Bench-scale laboratory equipment used for physical or chemical analysis, but not lab fume hoods or vents.

Adopted 04/07/04

APPENDIX F

SOIL DESIGNATIONS

INDEX

SECTION 1 – SOIL DESCRIPTIONS

SECTION 2 – SOIL MAP

MARICOPA COUNTY
AIR POLLUTION CONTROL REGULATIONS

APPENDIX F
SOIL DESIGNATIONS

1. SOIL DESCRIPTIONS

a. **VERY SLIGHT SOIL TEXTURE –** includes very fine sand, fine sand, sand, coarse sand, loamy very fine sand, loamy fine sand, loamy sand.

b. **SLIGHT SOIL TEXTURE –** includes very fine sandy loam, fine sandy loam, sandy loam, course sandy loam.

c. **MODERATE SOIL TEXTURE –** includes loam, silt loam, clay loam, silty clay loam, sandy clay loam.

d. **SEVERE SOIL TEXTURE –** includes clay, silty clay, sandy clay.

2. SOIL MAP

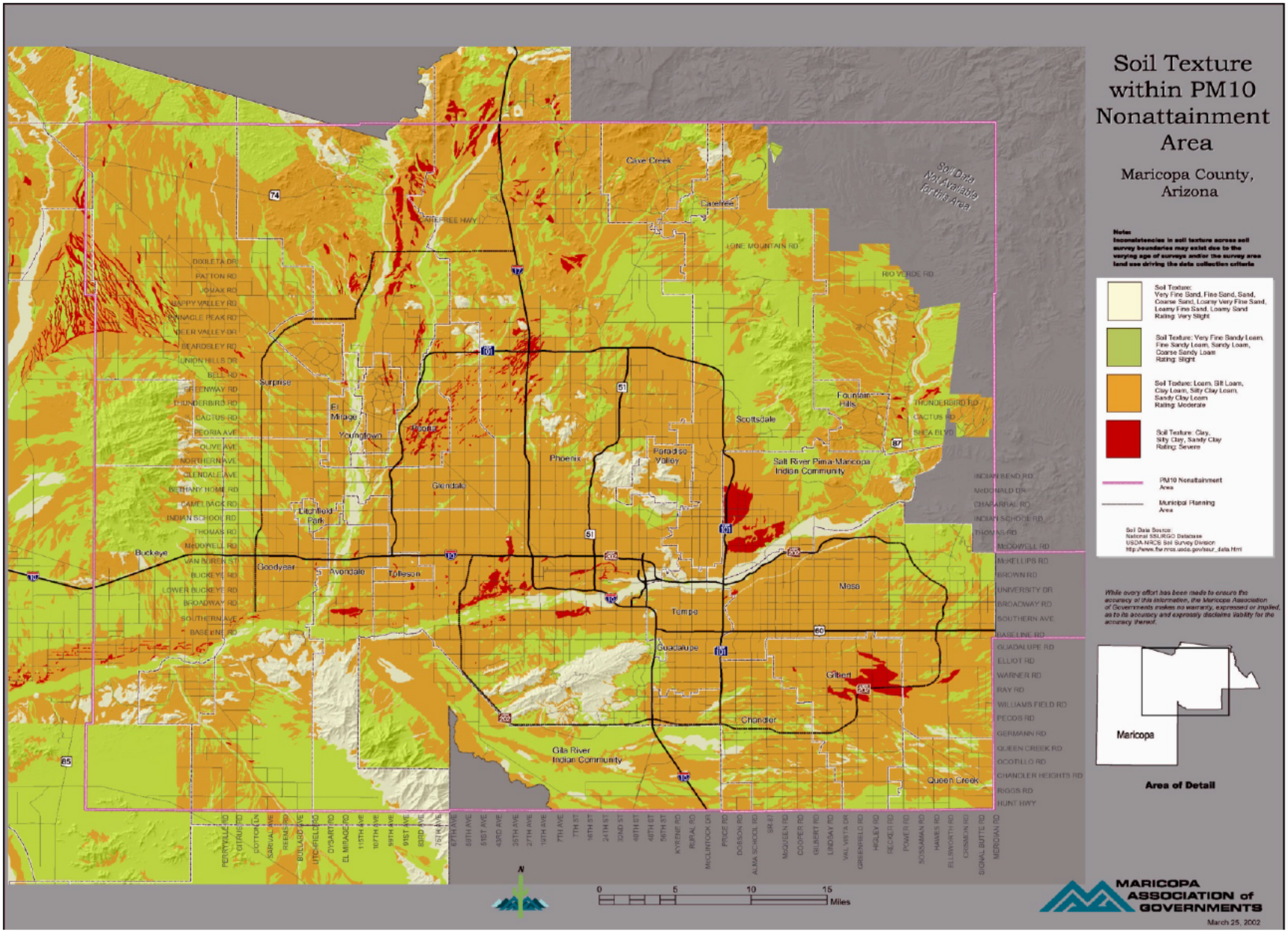

Note:
Inconsistencies in soil texture across soil survey boundaries may exist due to the varying age of surveys and/or the survey area land use driving the data collection criteria.

Adopted 03/15/06; Revised 12/17/08; Revised 09/16/09; Revised 07/07/10; Revised 08/17/11; Revised 07/25/12; Revised 09/25/13; and **Revised March 26, 2014.**

MARICOPA COUNTY
AIR POLLUTION CONTROL REGULATIONS

APPENDIX G
Incorporated Materials

1. The following test methods, protocols, federal interpretations, guidelines, and appendices located in Title 40, Code of Federal Regulations (CFR) are approved for use as directed by the department under the Maricopa County Air Pollution Control Regulations. These standards are incorporated by reference as of July 1, 2013, and no future editions or amendments.

a. 40 CFR 50;

b. 40 CFR 50, Appendices A-1, A-2, B, C, D, E, F, G, H, I, J, K, L, M, N, O, P, Q, R, S, and T;

c. 40 CFR 51; Appendix M; Appendix S, Section IV; and Appendix W;

d. 40 CFR 52, Appendices D and E;

e. 40 CFR 53;

f. 40 CFR 58;

g. 40 CFR 58, Appendices A, C, D, E, and G;

h. 40 CFR 60, Appendices A-1, A-2, A-3, A-4, A-5, A-6, A-7, A-8, B, C, D, F, G, and I;

i. 40 CFR 61, Appendices A, B, C, D, and E;

j. 40 CFR 63, all appendices; and

k. 40 CFR 75, Appendices A, B, C, D, E, F, and G.

2. The following are federally listed non-precursor organic compounds, organic compounds which have been determined to have negligible photochemical reactivity as listed in 40 CFR 51.100(s).

a. This list is incorporated by reference as of July 1, 2013, and no future editions or amendments:

methane;
ethane;
methylene chloride (dichloromethane);
1,1,1-trichloroethane (methyl chloroform);
1,1,2-trichloro-1,2,2-trifluoroethane (CFC-113);
trichlorofluoromethane (CFC-11);
dichlorodifluoromethane (CFC-12);
chlorodifluoromethane (HCFC-22);
trifluoromethane (HFC-23);
1,2-dichloro 1,1,2,2-tetrafluoroethane (CFC-114);
chloropentafluoroethane (CFC-115);
1,1,1-trifluoro 2,2-dichloroethane (HCFC-123);
1,1,1,2-tetrafluoroethane (HFC-134a);
1,1-dichloro 1-fluoroethane (HCFC-141b);
1-chloro 1,1-difluoroethane (HCFC-142b);
2-chloro-1,1,1,2-tetrafluoroethane (HCFC-124);
pentafluoroethane (HFC-125);
1,1,2,2-tetrafluoroethane (HFC-134);
1,1,1-trifluoroethane (HFC-143a);

1,1-difluoroethane (HFC-152a);
parachlorobenzotrifluoride (PCBTF);
cyclic, branched, or linear completely methylated siloxanes;
acetone;
perchloroethylene (tetrachloroethylene);
3,3-dichloro-1,1,1,2,2-pentafluoropropane (HCFC-225ca);
1,3-dichloro-1,1,2,2,3-pentafluoropropane (HCFC-225cb);
1,1,1,2,3,4,4,5,5,5-decafluoropentane (HFC43-10mee);
difluoromethane (HFC-32); ethylfluoride (HFC-161);
1,1,1,3,3,3-hexafluoropropane (HFC-236fa);
1,1,2,2,3-pentafluoropropane (HFC-245ca);
1,1,2,3,3-pentafluoropropane (HFC-245ea);
1,1,1,2,3-pentafluoropropane (HFC-245eb);
1,1,1,3,3-pentafluoropropane (HFC-245fa);
1,1,1,2,3,3-hexafluoropropane (HFC-236ea);
1,1,1,3,3-pentafluorobutane (HFC-365mfc);
chlorofluoromethane (HCFC-31);
1 chloro-1-fluoroethane (HCFC-151a);
1,2-dichloro-1,1,2-trifluoroethane (HCFC-123a);
1,1,1,2,2,3,3,4,4-nonafluoro-4-methoxy-butane ($C_4 F_9 OCH_3$ or HFE-7100);
2-(difluoromethoxymethyl)-1,1,1,2,3,3,3-heptafluoropropane ($(CF_3)_2 CFCF_2 OCH_3$);
1-ethoxy-1,1,2,2,3,3,4,4,4-nonafluorobutane ($C_4 F_9 OC_2 H_5$ or HFE-7200);
2-(ethoxydifluoromethyl)-1,1,1,2,3,3,3-heptafluoropropane ($(CF_3)_2 CFCF_2 OC_2 H_5$);
methyl acetate;
1,1,1,2,2,3,3-heptafluoro-3-methoxy-propane (n-C3F7OCH3, HFE-7000);
3-ethoxy- 1,1,1,2,3,4,4,5,5,6,6,6-dodecafluoro-2-(trifluoromethyl) hexane (HFE-7500);
1,1,1,2,3,3,3-heptafluoropropane (HFC-227ea);
methyl formate (HCOOCH3);
1,1,1,2,2,3,4,5,5,5-decafluoro-3-methoxy-4-trifluoromethyl-pentane (HFE-7300);
propylene carbonate;
dimethyl carbonate;
***trans* -1,3,3,3-tetrafluoropropene;**
$HCF_2 OCF_2 H$ (HFE-134);
$HCF_2 OCF_2 OCF_2 H$ (HFE-236cal2);
$HCF_2 OCF_2 CF_2 OCF_2 H$ (HFE-338pcc13);
$HCF_2 OCF_2 OCF_2 CF_2 OCF_2 H$ (H-Galden 1040x or H-Galden ZT 130 (or 150 or 180)); and
perfluorocarbon compounds which fall into these classes:
(i) Cyclic, branched, or linear, completely fluorinated alkanes;
(ii) Cyclic, branched, or linear, completely fluorinated ethers with no unsaturations;
(iii) Cyclic, branched, or linear, completely fluorinated tertiary amines with no unsaturations; and
(iv) Sulfur containing perfluorocarbons with no unsaturations and with sulfur bonds only to carbon and fluorine.

b. The following compound(s) are VOC for purposes of all recordkeeping, emissions reporting, photochemical dispersion modeling, and inventory requirements, which apply to VOC and shall be uniquely identified in emission reports but are not VOC for purposes of VOC emissions limitations or VOC content requirements: t-butyl acetate (540-88-5).

3. The following documents are incorporated by reference and are approved for use as directed by the department under the Maricopa County Air Pollution Control Regulations. These documents are incorporated by reference as of the year specified below, and no future editions or amendments.

a. The Arizona Department of Environmental Quality's (ADEQ) “Arizona Testing Manual for Air Pollutant Emissions,” amended as of March 1992, and no future editions or amendments.

b. All ASTM International (ASTM) standards referenced in the Maricopa County Air Pollution Control Regulations as of the year specified in the reference, and no future editions or amendments.

c. The U.S. Government Printing Office's “Standard Industrial Classification Manual, 1987”, published by the Executive Office of the President, Office of Management and Budget, and no future editions or amendments.

d. EPA Publication No. AP-42, 1995, “Compilation of Air Pollutant Emission Factors,” Volume I: Stationary Point and Area Sources, Fifth Edition, including Supplements A, B, C, D, E, F, Updates 2001, 2002, 2003, and 2004 and all updates as of July 1, 2013, and no future editions or amendments.

e. EPA guidance document “Guidelines for Determining Capture Efficiency”, January 9, 1995, and no future editions or amendments.

f. 2002 US NAICS Manual, “North American Industry Classification System United States”, National Technical Information Service, US Census Bureau, 2002, and no future editions or amendments.

4. The following federal regulations located in Title 40, Code of Federal Regulations (CFR) are approved for use as directed by the department under the Maricopa County Air Pollution Control Regulations. These standards are incorporated by reference as of July 1, 2013, and no future editions or amendments.

a. The Consolidated Emissions Reporting Rule in 40 CFR 51, Subpart A, Appendix A, Table 2A.

b. 40 CFR 75.

Availability of Information: Copies of these incorporated materials are available electronically at: ecfr.gpoaccess.gov; at the Maricopa County Air Quality Department, 1001 N. Central Ave, Suite 125, Phoenix, AZ, 85004. ASTM standards are available from ASTM International, 100 Barr Harbor Drive, P.O. Box C700, West Conshohocken, PA 19428, or from its website at www.astm.org.

Adopted 06/06/07

APPENDIX H

PROCEDURES FOR DETERMINING AMBIENT AIR CONCENTRATIONS FOR HAZARDOUS AIR POLLUTANTS

INDEX

SECTION 1 – APPLICABILITY

SECTION 2 – CHRONIC AMBIENT AIR CONCENTRATIONS

SECTION 3 – ACUTE AMBIENT AIR CONCENTRATIONS

MARICOPA COUNTY
AIR POLLUTION CONTROL REGULATIONS

APPENDIX H
PROCEDURES FOR DETERMINING AMBIENT AIR CONCENTRATIONS
FOR HAZARDOUS AIR POLLUTANTS

1. **APPLICABILITY:** The procedure described in Appendix H of these rules shall be used to develop chronic ambient air concentrations (CAACs) and acute ambient air concentrations (AAACs) for hazardous air pollutants (HAPs) for the following:

a. Any HAP not included in Rule 372-Maricopa County Hazardous Air Pollutants (HAPS) Program-Table 3-Acute And Chronic Ambient Air Concentrations of these rules; and

b. Any compound included in a group of HAPs listed in Rule 372-Maricopa County Hazardous Air Pollutants (HAPS) Program-Table 3-Acute And Chronic Ambient Air Concentrations of these rules, other than those identified in the group listing as the "selected" compound.

2. **CHRONIC AMBIENT AIR CONCENTRATIONS:**

a. The applicant shall review the following data sources and, except as otherwise provided, shall give them the priority indicated in the development of chronic ambient air concentrations (CAACs):

(1) **Tier 1 Data Sources:** Reference Concentrations (RfCs) and air Unit Risk Factors (URFs) as presented in the Integrated Risk Information System (IRIS) of the United States Environmental Protection Agency (EPA).

(2) **Tier 2 Data Sources:**

(a) Preliminary Remediation Goals (PRGs) developed by Region 9 of the EPA.

(b) Risk-Based Concentrations (RBCs) developed by Region 3 of the EPA.

(3) **Tier 3 Data Sources:**

(a) Minimal Risk Levels (MRLs) developed by the Agency For Toxic Substances And Disease Registry (ATSDR).

(b) Reference Exposure Levels (RELs) and Unit Risk Factors (CalURFs) developed by the California Environmental Protection Agency.

b. **Evaluation Of Tier 1 Values:**

(1) **Calculation Of Concentrations:**

(a) Reference Concentrations (RfCs) shall be multiplied by 1.04 to reflect an assumed exposure of 350 rather than 365 days per year.

(b) Unit Risk Factors (URFs) shall be transformed into concentrations in milligrams per cubic meter (mg/m^3) by applying the following equation:

TR x ATc/(EF x IFA adj x [URF x BW/IR])

Where: TR = 1E-06
ATc = 25,550 days
EF = 350 days/year
IFA adj = $11m^3$-year/kg-day
BW = 70 kg
IR = 20 m^3/day

(2) Comparison To Tier 2 And Tier 3 Concentrations:

(a) The concentration developed in accordance with Section 2(b)(1) of this appendix shall be compared to the Tier 2 and Tier 3 concentrations for the compound, if any.

(b) Unit Risk Factor (URF)-based concentrations shall be compared only to concentrations based on Unit Risk Factors (CalURFs) developed by the California Environmental Protection Agency.

(c) Reference Concentrations (RfCs)-based concentrations shall be compared to concentrations based on Preliminary Remediation Goals (PRGs), Risk-Based Concentrations (RBCs), Minimal Risk Levels (MRLs), and Reference Exposure Levels (RELs).

(d) If there is reasonable agreement between Tier 1 concentration and the other concentrations for the compound, the Tier 1 concentration shall be selected as the chronic ambient air concentration (CAAC).

(e) If the Tier 1 concentration is not in reasonable agreement with the other concentrations and one of the other concentrations is based on more recent or relevant studies that concentration shall be selected as the chronic ambient air concentration (CAAC). Otherwise, the Tier 1 concentration shall be selected.

(**3**) If both a Reference Concentration (RfC)-based and a Unit Risk Factor (URF)-based Tier 1 concentration is selected under Section 2(b)(2) of this appendix, the more stringent of the two shall be used as the chronic ambient air concentration (CAAC).

(**4**) If a Tier 1 value is selected in accordance with this section of this appendix, no further evaluation of Tier 2 or Tier 3 concentrations is required.

c. Evaluation Of Tier 2 Concentrations:

(1) Selection Of Tier 2 Values For Further Evaluation:

(a) If there is only a Preliminary Remediation Goal (PRG) or Risk-Based Concentrations (RBCs) for the compound, it shall be selected for further evaluation in accordance with Section 2(c)(2) of this appendix.

(b) If there is both a Preliminary Remediation Goal (PRG) and a Risk-Based Concentration (RBC) for the compound, the concentrations shall be compared. If the concentrations are similar, the Preliminary Remediation Goal (PRG) shall be selected for further evaluation. If the concentrations are not similar and the Risk-Based Concentration (RBC) is based on more relevant or more recent studies, it shall be selected for further evaluation. Otherwise, the Preliminary Remediation Goal (PRG) shall be selected.

(2) Comparison To Tier 3 Concentrations:

(a) The concentration developed in accordance with Section 2(c)(1) of this appendix shall be compared to the Tier 3 concentrations for the compound, if any. For purposes of this comparison, only Minimal Risk Level (MRL)-based or Reference Exposure Level (REL)-based concentrations shall be considered.

(b) If there is reasonable agreement between the Tier 2 concentrations and the Tier 3 concentrations for the compound, the Tier 2 concentration shall be selected as the chronic ambient air concentration (CAAC).

(c) If the Tier 2 concentration is not in reasonable agreement with the Tier 3 concentrations and one of the Tier 3 concentrations is based on more recent or relevant studies, that concentration shall be selected as the chronic ambient air concentration (CAAC). Otherwise, the Tier 2 concentration shall be selected.

(d) If the Tier 2 concentration is selected in accordance with Section 2(c) of this appendix, no further evaluation of Tier 3 concentrations is required.

d. Evaluation Of Tier 3 Values:

(1) Calculation Of Concentrations:

(a) Minimal Risk Levels (MRLs) and Reference Exposure Levels (RELs) shall be multiplied by 1.04 to reflect an assumed exposure of 350 rather than 365 days per year.

(b) Unit Risk Factors (CalURFs) developed by the California Environmental Protection Agency shall be transformed into concentrations in milligrams per cubic meter (mg/m^3) by applying the following equation:

TR x ATc/(EF x IFA adj x [CalURF x BW/IR])

Where: TR = 1E-06
ATc = 25,550 days
EF = 350 days/year
IFA adj = $11m^3$-year/kg-day
BW = 70 kg
IR = 20 m^3/day

(2) Selection Of Concentration:

(a) If both a Minimal Risk Level (MRL) and a Reference Exposure Level (REL) exist for the compound, the most appropriate shall be selected after considering the relevance and timing of the studies on which the levels are based.

(b) If there is both a Unit Risk Factors (CalURFs) developed by the California Environmental Protection Agency-based concentration and a concentration based on a Minimal Risk Level (MRL) or a Reference Exposure Level (REL) for the compound, the more stringent of the two shall be selected.

e. No Available Data: If there is no data available in any of the sources identified in Section 2(a) of this appendix for the compound, the applicant must perform a Tier 4 risk management analysis (RMA) under Rule 372-Maricopa County Hazardous Air Pollutants (HAPS) Program-Section 306-Risk Management Analysis (RMA) of these rules or forego the risk management analysis (RMA) option.

3. ACUTE AMBIENT AIR CONCENTRATIONS:

a. Selection Of Concentration:

(1) The first concentration identified by evaluating the following data sources in the order listed shall be adjusted, where required, and used as the acute ambient air concentration (AAAC) for the compound:

(a) The level 2 four-hour average Acute Exposure Guideline Level developed by the EPA Office Of Prevention-Pesticides And Toxic Substances.

(b) The level 2 Emergency Response Planning Guideline (ERPG) developed by the American Industrial Hygiene Association. The acute ambient air concentration (AAAC) shall be the Emergency Response Planning Guideline (ERPG) divided by two.

(c) The level 2 Temporary Emergency Exposure Limit (TEEL) developed by the United States Department Of Energy's Emergency Management Advisory Committee's Subcommittee On Consequence Assessment And Protective Action. The acute ambient air concentration (AAAC) shall be the Temporary Emergency Exposure Limit (TEEL) divided by two.

(2) **No Available Data:** If there is no data available in any of the sources identified in Section 3(a) of this appendix, the applicant must perform a Tier 4 risk management analysis (RMA) under Rule 372-Maricopa County Hazardous Air Pollutants (HAPS) Program-Section 306-Risk Management Analysis (RMA) of these rules or forego the risk management analysis (RMA) option.